REVOSIONS			
VER	REV	DESCRIPTION	DATE
0	0	FIRST RELEASE	2025.12.4

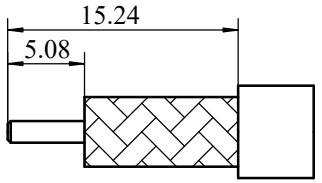

Recommended cable striping dim's

Connector adds: 18mm

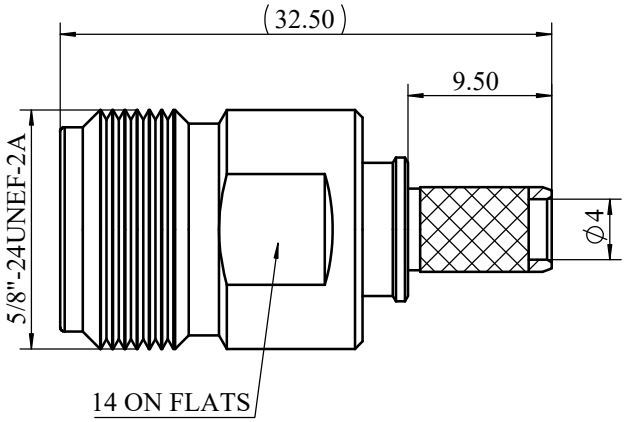

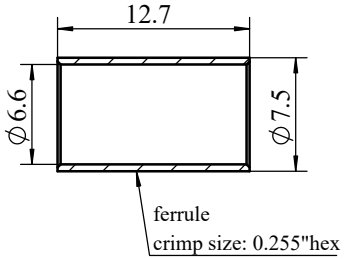

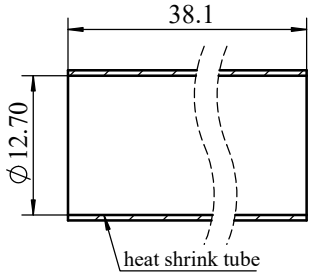

REFERENCE STANDARD	IEC61169-16
1. ELECTRIC PERFORMANCE	
NOMINAL IMPEDANCE(Ω)	50
FREQUENCY RANGE	DC-6GHz
VSWR	≤1.3
INSERT LOSS(dB)	≤ 0.1√F(GHz)
INSULATION RESISTANCE(MΩ)	≥5000
PROOF VOLTAGE(Vrms)	1000
CONTACT RESISTANCE(mΩ)	OUTER CONDUCTOR <0.2 INNER CONDUCTOR<1.0
2. MECHANICAL PERFORMANCE	
RETENTION	0.56N
MATING CYCLES	500
TENSILE FORCE(CABLE-CONNECT)	150N
TORSION(CABLE-CONNECT)	0.3N.m

3. MATERIAL AND PLATING		
INNER CONDUCTOR	BERYLLIUM COPPER	Au1.3μm
OUTER CONDUCTOR	BRASS	COPPER-TIN-ZINC3μm
NUT	BRASS	COPPER-TIN-ZINC3μm
FERRULE	COPPER	COPPER-TIN-ZINC3μm
INSULATOR	PTFE	
O-RING	SILICONE RUBBER	
4. ENVIRONMENT		
TEMP.RANGE	-40℃~+125℃	
WEATHER STANDARD	IEC 60068 40 / 125/ 21	
THERMAL SHOCK	IEC 60068 -2-14-Na	
VIBRATION	IEC 60068-2-6-Fc	
SHOCK	IEC 60068-2-27	
ROHS COMPLIANT		

5.ASSEMBLY: INNER CONDUCTOR INSTALLED AND OUTER CONDUCTOR CRIMPED

DRAWN: YUYING	TITLE(271): NF-240			Amphenol AMPHENOL FUYANG CO.,LTD CHANGZHOU, CHINA	
CHECKED: WANGYING				DRAWING NO.: AFS-A466-2	VER: 0 / REV: 0
APPROVED: XU YIMING	SHEET: 1/1	SCALE: 1/1	METRIC: mm	PART NO.: AFA466-2	