Interchangeable Ceiling Tile Enclosures

for Cisco 9164-9166

Connect, Protect, and Enable™

Ceiling Tile Enclosure

Includes Hanger Wire, Firestop Grommet with Chase Nipple, Cable Entry Locknut, and 2 ft. T-bar Strip

SKU	611145
Manufacturer Part Number	V3-ID-CTEN-9164-9166
Dimensions	23.75 x 23.75 x 4 in.
Weight	4.5 lbs.
Material	Aluminum
Mounting Options	Ceiling Tile



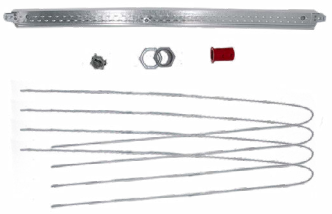

Hard-Lid Ceiling Tile Enclosure

SKU	611150
Manufacturer Part Number	V2-ID-HCEN-9164-9166
Dimensions	18 x 18 x 2.5 in.
Weight	3.5 lbs.
Material	Aluminum
Mounting Options	Hard-Lid or Wall



Replacement Door

SKU	611135
Manufacturer Part Number	V3-IDOOR-9164-9166
Dimensions	12 x 12 x 2 in.
Weight	1.5 lbs.
Material	Aluminum



NOTE: Models and components continue on next page.

All product specifications are subject to change without notice or obligation.

Interchangeable Ceiling Tile Enclosures

for Cisco 9164-9166

Connect, Protect, and Enable™

Ceiling Tile Bracket

SKU	611119
Manufacturer Part Number	CT-BKT2-9164-9166
Dimensions	23.75 x 11.5 x 2.96 in.
Weight	1 lbs.
Material	Aluminum
Mounting Options	Ceiling Tile



Right Angle Bracket

SKU	611124
Manufacturer Part Number	HWM-9164-9166
Dimensions	13 x 12 x 4 in.
Weight	1.5 lbs.
Material	Aluminum
Mounting Options	Wall



All product specifications are subject to change without notice or obligation.

Interchangeable Ceiling Tile Enclosures

for Cisco 9164-9166

Connect, Protect, and Enable™

Ceiling Tile Enclosure

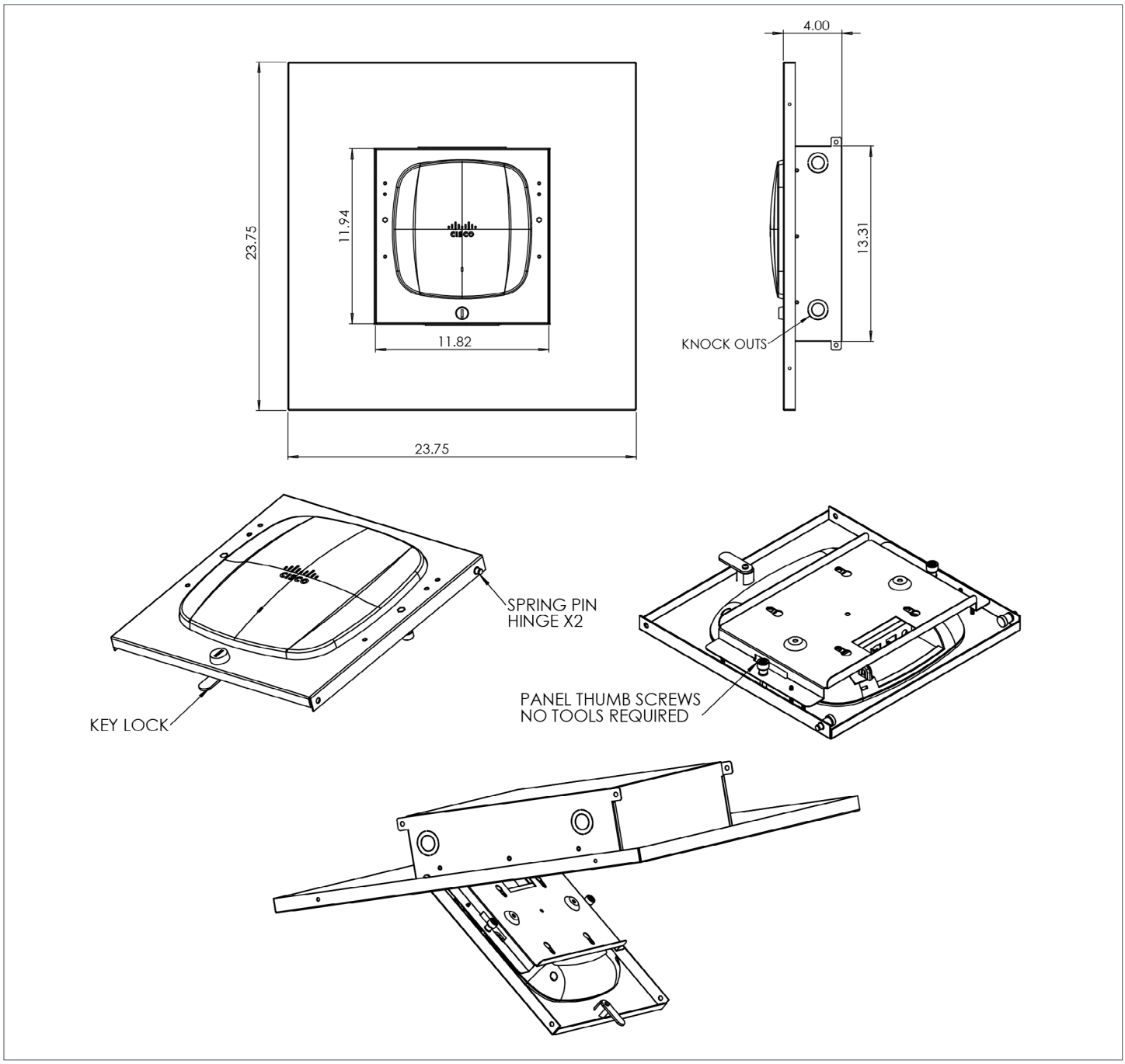

All product specifications are subject to change without notice or obligation.

Interchangeable Ceiling Tile Enclosures

for Cisco 9164-9166

ventev
Connect, Protect, and Enable™

Hard-Lid Ceiling Tile Enclosure

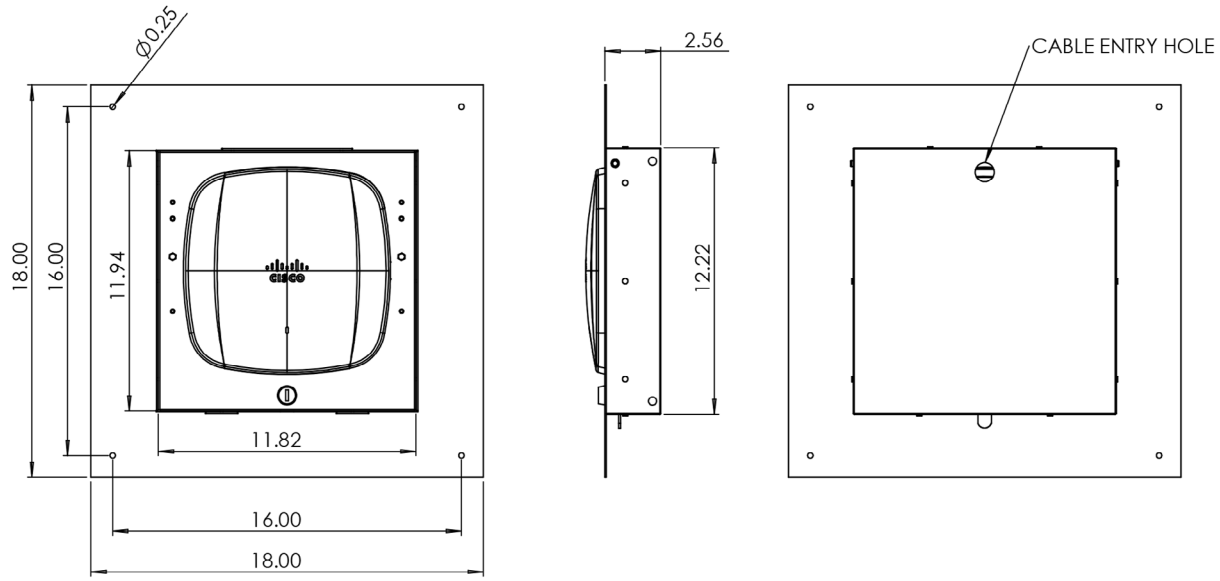

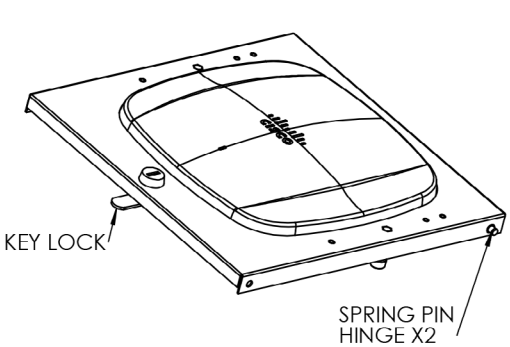

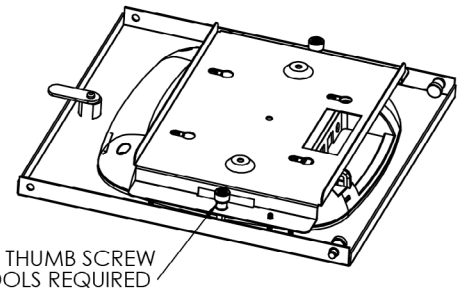

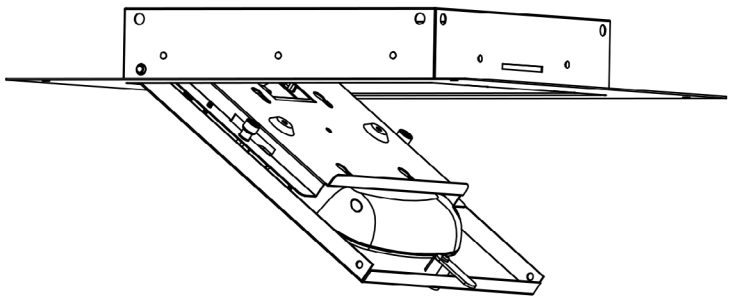

All product specifications are subject to change without notice or obligation.

Interchangeable Ceiling Tile Enclosures

for Cisco 9164-9166

Connect, Protect, and Enable™

Ceiling Tile Bracket

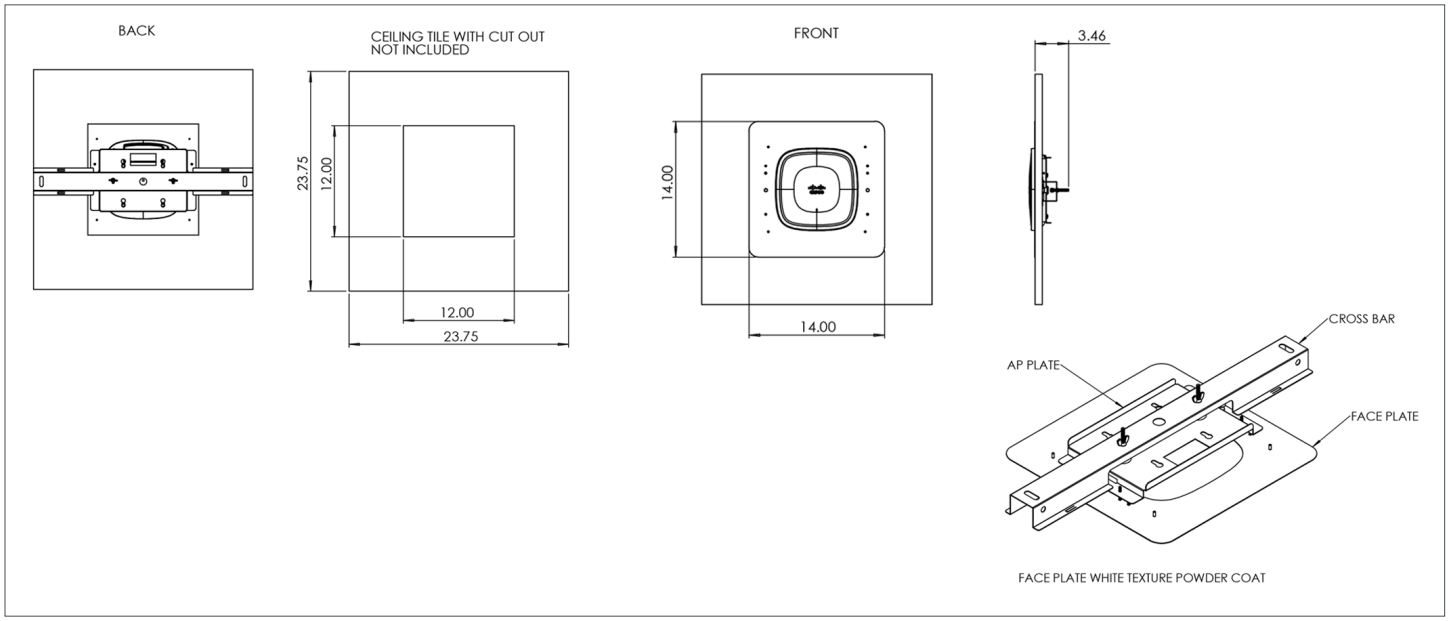

Right Angle Bracket

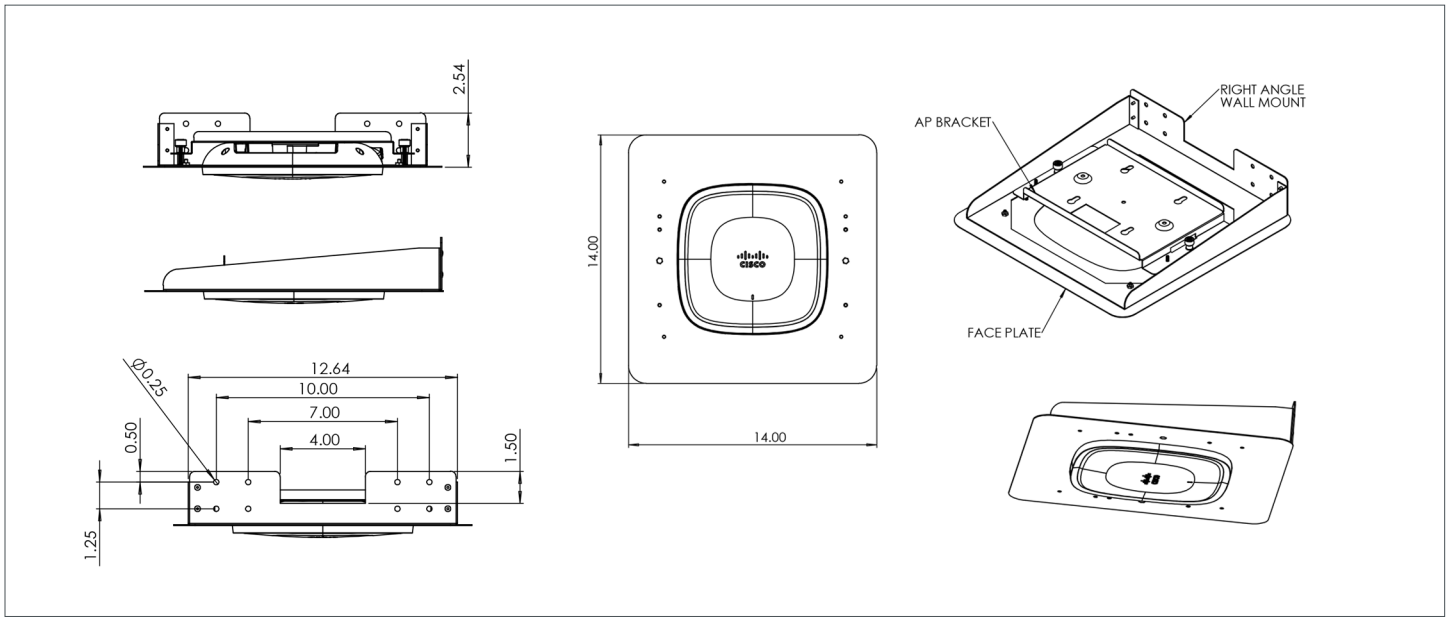

Cisco Solution Partner

Aruba Networks Certified

RoHS

All product specifications are subject to change without notice or obligation.