4.3-10-Female to 4.3-10-Female Low PIM Quarter Wave Protector, 555MHz to 4.5GHz



QWP-43F43F-ER

Features

- Extended Range Broadband Performance from 555 to 4500 MHz
- DC Block Topology
- Repetitive Strike Protection
- Low PIM

Applications

- CBRS Networks
- Cellular
- Distributed Antenna Systems (DAS)
- Emergency Response Systems
- Public Safety Systems

Description

RF surge protector (also known as lightning arrestor) QWP-43F43F-ER from PolyPhaser utilizing a quarter wave stub design to protect critical hardware while maintaining the RF performance. This RF surge protector component is manufactured in a coaxial in-line design with wide operating frequency range. PolyPhaser RF surge protector products are available in stock with same day shipping.

Electrical Specifications

Surge Protector Type	Quarter Wave Stub
DC Handling	DC Block

Description	Minimum	Typical	Maximum	Units
Frequency Range	0.555		4.5	GHz
Impedance		50		Ohms
VSWR			1.18:1	
Insertion Loss			0.1	dB
Passive Intermodulation			160	dBc
Input Power, CW			500	Watts
Surge Current			50	kA
IEC 61000-4-5 8/20µs				

Mechanical Specifications

Size

Length	3.09 in [78.49 mm]
Width/Diameter	0.98 in [24.89 mm]
Height	1.47 in [37.34 mm]
Weight	0.5 lbs [226.8 g]
Housing Material and Plating	Brass, Tri-Metal

Configuration

Input Connector	4.3-10 Female
Output Connector	4.3-10 Female

Environmental Specifications

Temperature

Operating Range	-40 to +85 deg C
Ingress Protection (IP) Rating	Pin to Shield

© 2026 Infinite Electronics, Inc., PolyPhaser is a registered trademark of Infinite Electronics, Inc.
+1 (800) 882-9110 | techsupportpro@infiniteelectronics.com | polyphaser.com

4.3-10-Female to 4.3-10-Female Low PIM Quarter Wave Protector, 555MHz to 4.5GHz



QWP-43F43F-ER

Compliance Certifications (see product page for current document)

Plotted and Other Data

Notes:

PolyPhaser protects and increases the reliability of global RF communications networks, including transportation, telecommunications, defense, security and industrial applications, with superior RF surge protection technologies including DC Block, DC Pass and Ultra Low PIM. Backed by responsive service and expert technical support PolyPhaser continually expands its product offering and services to serve engineers' urgent needs for RF components in mission critical communication networks.

Click the following link (or enter part number in "SEARCH" on website) to obtain additional part information including price, inventory and certifications: 4.3-10-Female to 4.3-10-Female Low PIM Quarter Wave Protector, 555MHz to 4.5GHz QWP-43F43F-ER

URL: https://www.polyphaser.com/4.3-10-surge-protector-4.5ghz-quarter-wave-stub-qwp-43f43f-er

The information contained within this document is accurate to the best of our knowledge and representative of the part described herein. It may be necessary to make modifications to the part and/or the documentation of the part in order to impliment improvements. PolyPhaser reserves the right to make such changes as required. Unless otherwise stated, all specifications are nominal. PolyPhaser does not make any representation or warranty regarding the suitability of the part described herein for any particular purpose, and PolyPhaser does not assume liability arising out of the use of any part or document.

© 2026 Infinite Electronics, Inc., PolyPhaser is a registered trademark of Infinite Electronics, Inc.

QWP-43F43F-ER CAD Drawing

4.3-10-Female to 4.3-10-Female Low PIM Quarter Wave Protector, 555MHz to 4.5GHz

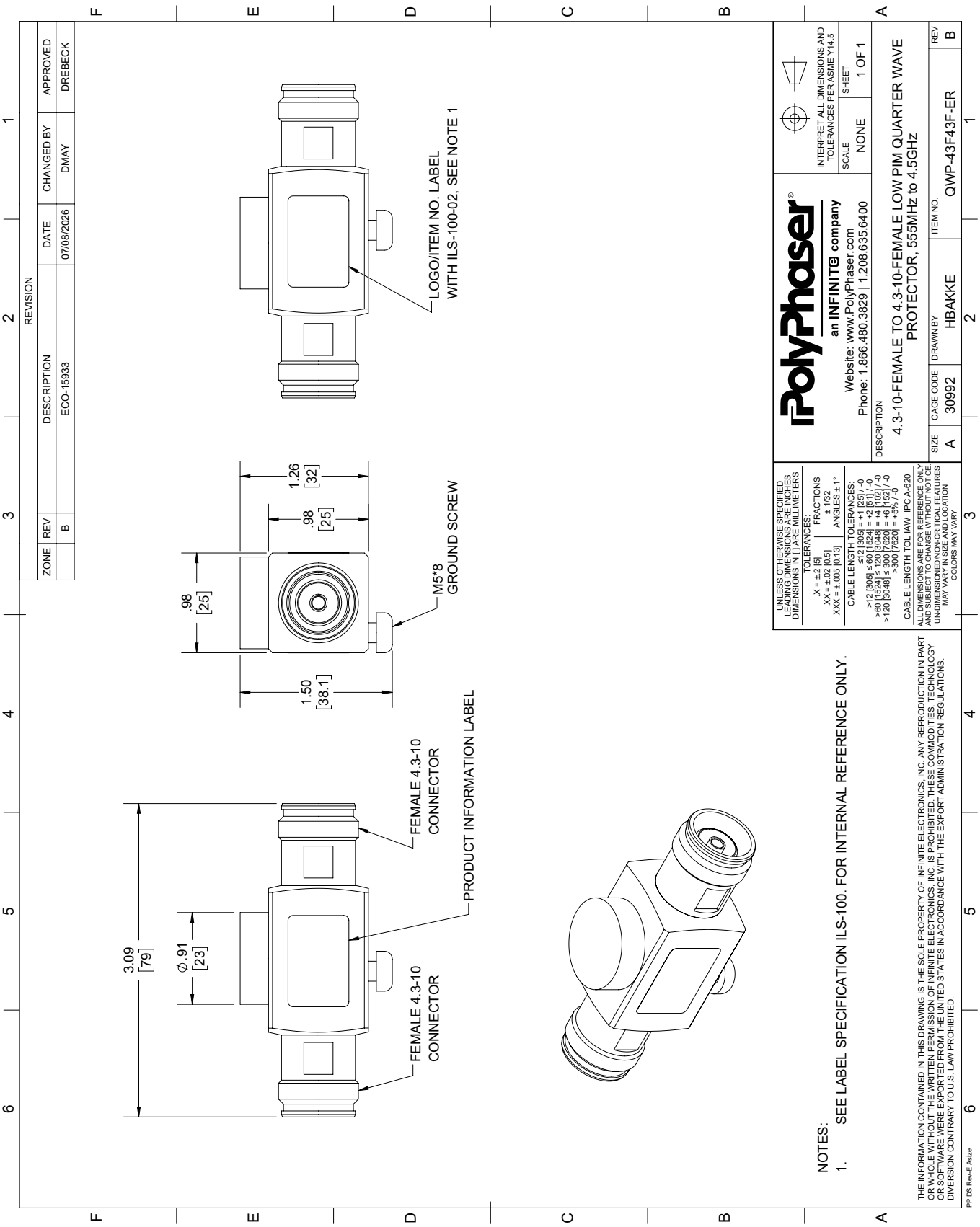

© 2025 Infinite Electronics, Inc., PolyPhaser is a registered trademark of Infinite Electronics, Inc.