App No: 2023052159

Application General Information

Applicant Name	Smartlink LLC	Received	5/17/2023
Application Type	Minor Modification	Ann. Plan?	Yes
Carrier	AT&T Wireless	Will site be used to support government telecommunications facilities or other equipment for government use?	No
Solution Type	Macro		
Existing	Existing	Gvt. Use Desc.	

Application Description

AT&T proposes to REMOVE (6) existing antennas, (1) cabinet, RELOCATED (6) RRHs and INSTALL (3) Commscope antennas, (6) NOKIA antennas and (2) rectifiers.

Site Information

Site Id	30	Zoning	R-90
Structure Type	Tower	Latitude	38.976636
Street Address	5601 River Rd	Longitude	-77.11425
County Site Name	Kenwood Country Club	Ground Elevation	363
Carrier Site Name	Radnor Rd	City	Bethesda
Site Owner	Kenwood Country Club	Lease Status	Leased
Structure Owner	Salem Radio Properties	Does the structure require an antenna structure registration under FCC Title 47 part 17?	No
Existing Structure Height	230		
Provide the proposed height of the replacement structure without any antenna (New Apps Only)		Distance to Residential Property (New, Colocation Only)	
		Distance to Commercial Property (New, Colocation Only)	

Justification of why this site was selected:

AT&T needs to maximize its coverage in the Bethesda area on this existing Self Support tower by REMOVING existing antennas & a cabinet, RELOCATING RRHs and INSTALLING new antennas and rectifiers.

Nearby Sites (New Apps Only):

App No: 2023052159

Screening considerations (New, Colocation Apps Only):

Thursday, May 18, 2023

10:09:53 AM

App No: 2023052159

6409 Questions

Does this qualify as a 6409 application? (Minor Mod, Colocations Only): Yes

For towers outside the public ROW will the proposed installation increase the height of the structure by: (1) more than 10% or (2) more than 20 feet, whichever is greater? No

Will the proposed installation increase the width by adding appurtenance to the body of the structure that would protrude from the edge of the structure by more than 6 feet? No

For towers outside the public ROW will the proposed installation increase the width by adding appurtenance to the body of the structure that would protrude from the edge of the structure by more than 20 feet? No

Will the proposed installation require more the standard number of new equipment cabinets for the technology involved, but not to exceed four cabinets?YN No

Will the proposed installation increase the height of the structure by: (1) more than 10% or (2) more than 10 feet, whichever is greater? No

Does the structure or current installation have concealment elements/measures? No

Will the proposed installation require excavation or expansion outside the current boundaries of the site? No

If yes, describe how the proposed installation does not defeat the existing concealment.

Small Wireless Facility Information

Is this a Small Wireless Facility? No

Is the structure 10% taller than adjacent structures?

Please list adjacent structure heights

Cumulative volume of the proposed wireless equipment(s) exclusive of antennas in cubic feet

Cumulative volume of the proposed antenna(s) exclusive of equipment in cubic feet

ROW Information

PROW? No

ROW owner

ROW width

Pole Number

Thursday, May 18, 2023

10:09:53 AM

App No: 2023052159

Antenna Information

Antenna Compliance	Yes
Compliance Desc	
Antenna Location	No
Antenna Loc. Desc.	
Env. Assessment	
Cat. Excluded?	
Routine Env. Evaluation	checked

Antenna Model	NOKIA AEQK						
Frequency	3860-3920						
RAD Center	152	Max ERP	9912	Antenna Dimension	29.5(l) x 17.7(w) x 9.5(d)	Quantity	3

Antenna Model	NOKIA AEQU						
Frequency	3450-3490						
RAD Center	156	Max ERP	9912	Antenna Dimension	29.5(l) x 17.7(w) x 9.5(d)	Quantity	3

Antenna Model	Commscope NNH4-65C-R6						
Frequency	RX: 704-716,788-798; 1710-1720,1760-1770; 2305-2315 TX: 734-740,758-768; 2110-2120,2160-2170; 2350-2360						
RAD Center	154	Max ERP	9952	Antenna Dimension	96(l) x 20(w) x 6.9(d)	Quantity	3

Thursday, May 18, 2023
10:09:53 AM

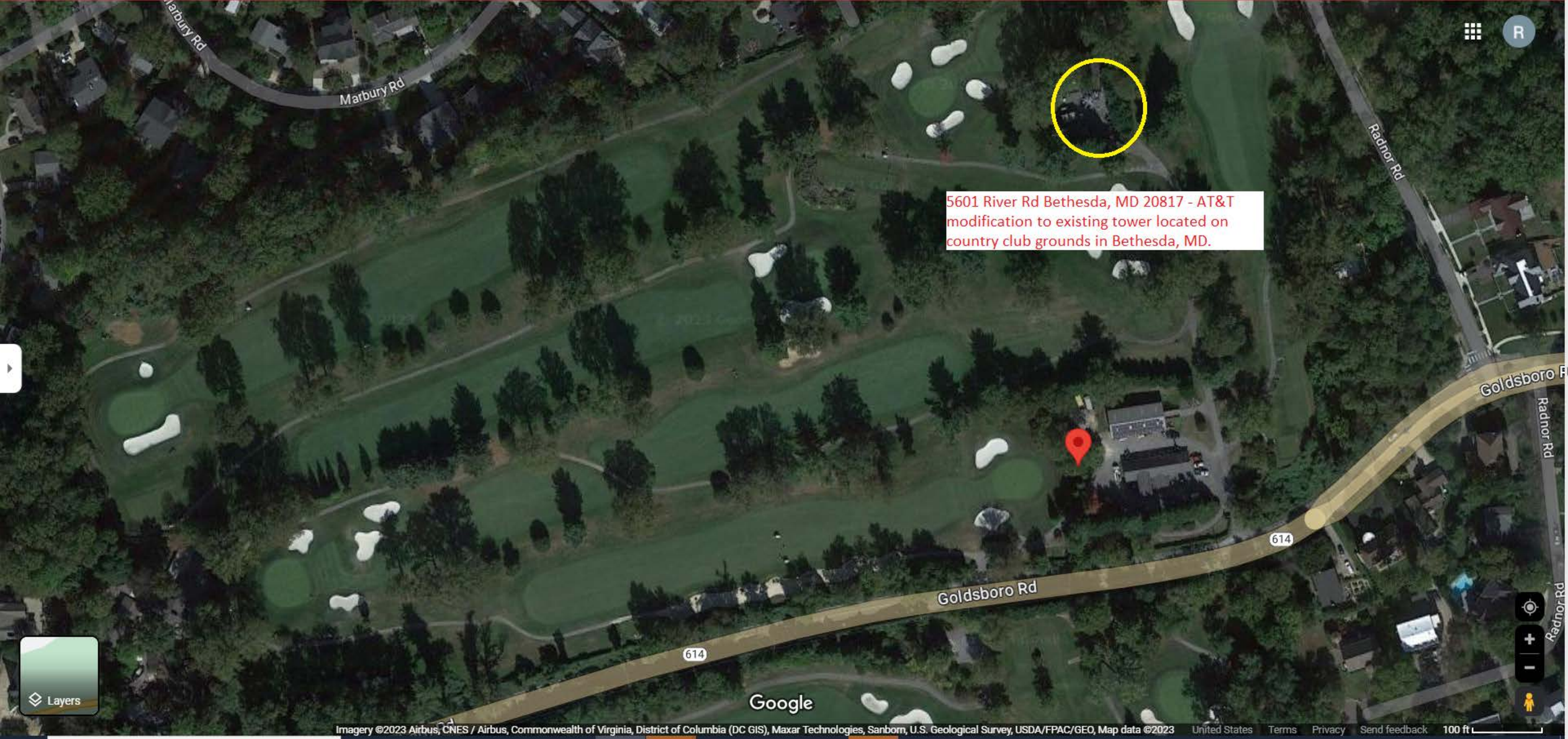
Marbury Rd
Radnor Rd
5601 River Rd Bethesda, MD 20817 - AT&T modification to existing tower located on country club grounds in Bethesda, MD.
Goldsboro Rd
614
Radnor Rd
Layers
Google
Imagery ©2023 Airbus, CNES / Airbus, Commonwealth of Virginia, District of Columbia (DC GIS), Maxar Technologies, Sanborn, U.S. Geological Survey, USDA/FPAC/GEO, Map data ©2023
United States
Terms
Privacy
Send feedback
100 ft

NNH4-65C-R6-UPM

8 ft, 12-port MOSAIC™ Antenna
4x 698-896 and 8x 1695-2360 MHz, 65° HPBW, 6x RET

- Enables mounting of C-Band and 3.45 GHz band radios and future 3 GHz band radios
- Array configuration provides capability for 4T4R on low and mid bands - performance is comparable to model NNH4-65C-R6
- Independent tilt for all passive arrays
- Solution reduces tower loading, minimizes tower sector modifications.

General Specifications

Antenna Type	Universal Active Passive Module (UAPM)
AAS (radio) Compatibility	64T64R, 32T32R, 8T8R at 3.45-4.2GHz

Passive Specifications

Bands	698-896, 1695-2360 MHz
RF Connector Interface	4.3-10 Female
RF Connector Location	Bottom
RF Connector Quantity, Mid band	8
RF Connector Quantity, Low band	4
RF Connector Quantity, Total	12

Remote Electrical Tilt (RET) Information

RET Hardware	CommRET v2
RET Interface	8-pin DIN Female | 8-pin DIN Male
Protocol	3GPP/AISG 2.0
Power Consumption, idle state, maximum	1 W
Power Consumption, active state, maximum	8 W
Internal RET, Low band	2
Internal RET, Mid band	4
RET Interface, quantity	1 Male | 1 Female

Dimensions

Length	2438 mm | 96.0 in
Width	498 mm | 19.6 in
Depth	197 mm | 7.8 in
Net Weight, Passive Antenna	44.5 kg | 98 lb

©2021 CommScope, Inc. All rights reserved. All trademarks identified by ® or ™ are registered trademarks, respectively, of CommScope. All specifications are subject to change without notice. See www.commscope.com for the most current information. Revised July 1, 2022

NNH4-65C-R6-UPM

Passive Array Layout

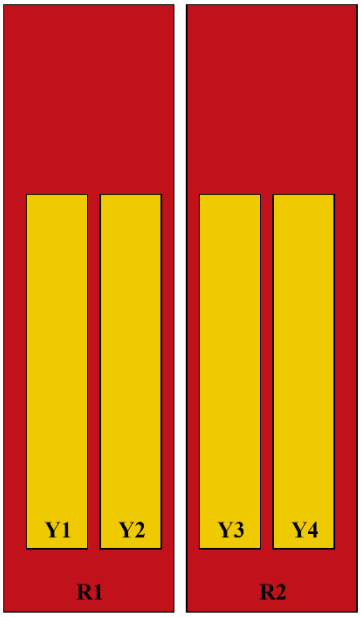

Array ID	Frequency (MHz)	RF Connector	RET (MRET)	AISG No.	AISG RET UID
R1	698-896	1 - 2	1	AISG1	CPxxxxxxxxxxxxMM.1
R2	698-896	3 - 4	2	AISG1	CPxxxxxxxxxxxxMM.2
Y1	1695-2360	5 - 6	3	AISG1	CPxxxxxxxxxxxxMM.3
Y2	1695-2360	7 - 8	4	AISG1	CPxxxxxxxxxxxxMM.4
Y3	1695-2360	9 - 10	5	AISG1	CPxxxxxxxxxxxxMM.5
Y4	1695-2360	11 - 12	6	AISG1	CPxxxxxxxxxxxxMM.6

(Sizes of colored boxes are not true depictions of array sizes)



Passive Electrical Specifications

Operating Frequency Band	698 – 896 MHz | 1695 – 2360 MHz
Impedance	50 ohm
Polarization	±45°

©2021 CommScope, Inc. All rights reserved. All trademarks identified by ® or ™ are registered trademarks, respectively, of CommScope. All specifications are subject to change without notice. See www.commscope.com for the most current information. Revised July 1, 2022

NNH4-65C-R6-UPM

Passive Electrical Specifications (Applicable to all radio models)

RF Ports	1-4	1-4	5-8	5-8	5-8	5-8
Array	R1, R2	R1, R2	Y1, Y2	Y1, Y2	Y1, Y2	Y1, Y2
Frequency Band, MHz	698-806	806-896	1695-1880	1850-1920	1920-2180	2300-2360
Gain, dBi	15.5	16.1	16.9	17.3	17.7	17.8
Beamwidth, Horizontal, degrees	64	57	56	54	55	58
Beamwidth, Vertical, degrees	10.2	8.9	7.4	6.9	6.6	5.9
Beam Tilt, degrees	2-12	2-12	2-12	2-12	2-12	2-12
USLS (First Lobe), dB	17	15	15	15	15	15
Front-to-Back Ratio at 180°, dB	29	28	32	33	33	31
Isolation, Cross Polarization, dB	25	25	25	25	25	25
Isolation, Inter-band, dB	25	25	25	25	25	25
VSWR | Return loss, dB	1.5 | 14.0	1.5 | 14.0	1.5 | 14.0	1.5 | 14.0	1.5 | 14.0	1.5 | 14.0
PIM, 3rd Order, 2 x 20 W, dBc	-150	-150	-150	-150	-150	-150
Input Power per port, Maximum (at elevated temp 50°C), Watt	300	300	250	250	250	200

Material Specifications

Radome Color	Gray
Radome Material	Fiberglass

Passive Mechanical Specifications

Wind Loading @ Velocity, frontal	1160 N @ 150 km/h (260.8 lbf @ 150 km/h)
Wind Loading @ Velocity, lateral	246 N @ 150 km/h (55.3 lbf @ 150 km/h)
Wind Loading @ Velocity, maximum	1182 N @ 150 km/h (265.7 lbf @ 150 km/h)
Wind Speed, maximum	241 km/h | 150 mph

Model Number	Description
NNH4-65C-R6-UPM	Stand-alone MOSAIC™ antenna with no frame or radio brackets

RAN OEM Specific Kits

Model Number	Description
FRAME-U-N1	Frame and brackets for mounting Nokia models AEQK & AEQU to the MOSAIC antenna
FRAME-U-E1	Frame and brackets for mounting Ericsson model 6449 to the MOSAIC antenna
FRAME-U-N2	Frame and brackets for mounting Nokia models AQQK & AQQQA to the MOSAIC antenna
FRAME-U-E2	Frame and brackets for mounting Ericsson model 6419 to the MOSAIC antenna

Included Products

Model Number	Description	Weight
BSAMNT-U3P-TK	Mount Kit	22.5 kg | 50 lb

©2021 CommScope, Inc. All rights reserved. All trademarks identified by ® or ™ are registered trademarks, respectively, of CommScope. All specifications are subject to change without notice. See www.commscope.com for the most current information. Revised July 1, 2022

Regulatory Compliance/Certifications

Agency	Classification
ISO 9001:2015	Designed, manufactured and/or distributed under this quality management system
ROHS	Compliant/Exempted
CHINA-ROHS	Above maximum concentration value



* Footnotes

Performance Note	Severe environmental conditions may degrade optimum performance

©2021 CommScope, Inc. All rights reserved. All trademarks identified by ® or ™ are registered trademarks, respectively, of CommScope. All specifications are subject to change without notice. See www.commscope.com for the most current information. Revised July 1, 2022



Brackets for mounting AAS

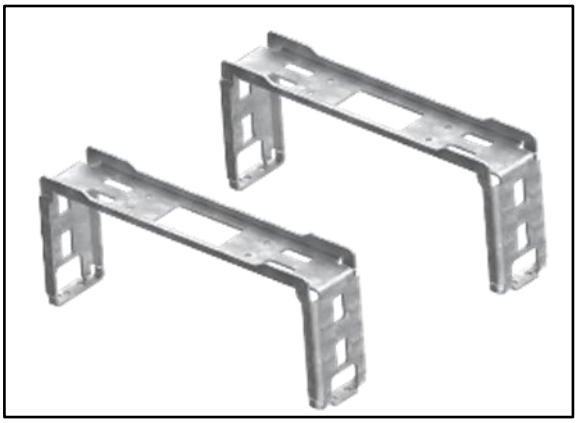

Frame for mounting AAS

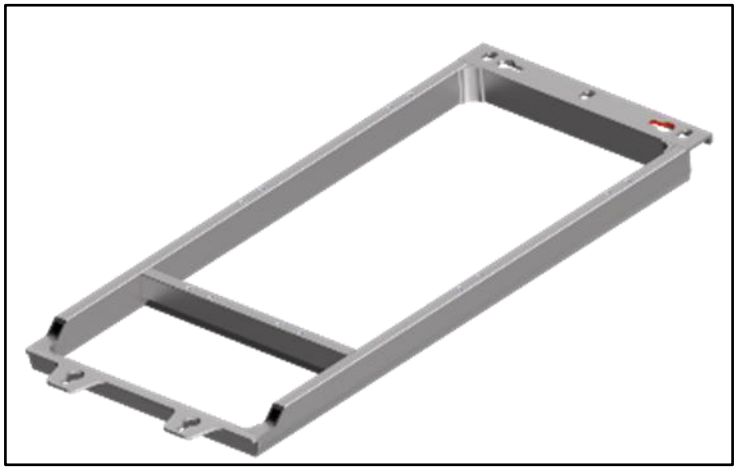

©2021 CommScope, Inc. All rights reserved. All trademarks identified by ® or ™ are registered trademarks, respectively, of CommScope. All specifications are subject to change without notice. See www.commscope.com for the most current information. Revised July 1, 2022

MOSAIC™ Antenna with AAS



Tower mounted MOSAIC™ Antenna



©2021 CommScope, Inc. All rights reserved. All trademarks identified by ® or ™ are registered trademarks, respectively, of CommScope. All specifications are subject to change without notice. See www.commscope.com for the most current information. Revised July 1, 2022

NOKIA

Nokia Networks

475589A AEQK C-band Radio Unit Technical Datasheet

HW Unit Technical Datasheet

V1.0

Confidential © Nokia 2020

AEQK AirScale MAA 64T64R 192AE n77 200W

Technical datasheet

Product Specifications	
Standard	3GPP/FCC NR compliant, TDD
Band / Frequency range	3700~3980MHz
Supported RAT	5G
Max. supported modulation	256QAM
Number of TX/RX paths	64T / 64R
MIMO streams	16
Instantaneous bandwidth IBW	200MHz
Occupied bandwidth OBW	100MHz+100MHz for 32TRX + 32TRX split mode
Total average EIRP	77dBm
Max. output power per TRX	3.125 W / TRX (200 W total) - SW settable up to 13 dB down
Dimensions / Volume	750 x 450 x 240 mm (H x W x D)
Weight	45kg w/o bracket
Supply voltage / Connector type	DC -40.5 V... -57V / 2 pole connector
Power consumption	727 W (75% DL duty cycle, ETSI Average)
Optical ports	2xSFP28, 10/25GE eCPRI
Other interfaces / Connector type	LMI / HDMI, RF monitor port / SMA, Control AISG, External Alarms / MDR26, status LEDs
Operational temperature range	-40degC to +55C
Cooling	Natural convection cooling
Installation options / mechanical tilt	Pole, wall, with vertical adjustment of ±15° (thermally limited)
Ingress / Surge protection	IP65/Class II 20KA

 © Nokia 2020

AirScale High Power MAA benefits

- 5G Adaptive Antenna System for optimized capacity and coverage
- Digital beamforming for multi-user MIMO
- Connectivity with AirScale BBU (via eCPRI)
- Beamforming capable 64T64R with total 200W output power
- 32TRX + 32TRX split mode support



AEQK 475589A

NOKIA

NOKIA

AEQU Datasheet

Preliminary Datasheet

© 2020 Nokia
Confidential

AEQU AirScale MAA 64T64R 192AE n77 200W

Technical data (Preliminary)

Product Specifications	
Standard	3GPP/FCC, TDD
Supported RAT by HW	5G
Band / Frequency range	3450 - 3550 MHz
Max. supported modulation	256 QAM
Number of TX/RX paths	64T / 64R
MIMO streams	16
Instantaneous bandwidth IBW	100 MHz
Occupied bandwidth OBW	100 MHz
Total average EIRP	77.5dBm
Max. output power per TRX	3.125 W / TRX (200W total)
Dimensions / Volume	750 x 450 x 240 mm (H x W x D) / 71.7 L
Weight	45kg w/o bracket
Supply voltage / Connector type	DC -40.5 V... -57V / 2 pole connector
Power consumption	730 W (75% DL duty cycle, ETSI 24h average load)
Optical ports	2 x SFP28, 10/25GE eCPRI
Other interfaces / Connector type	AISG / RS-485, EAC (6 alarms + 1 control) / MDR26, RF Monitor Port/SMA, 4 status LEDs
Operational temperature range	-40 °C ... +55 °C
Cooling	Natural convection cooling
Installation options	Pole / Wall, ± 15° mechanical vertical tilt
Ingress / Surge protection	IP65 / Class II 20 kA

AirScale High Power Wide Band MAA benefits

- 5G Adaptive Antenna System for optimized capacity and coverage
- Beamforming capable 64T64R with total 200W output power



AEQU 476085A

NOKIA

Radio Frequency Safety Survey Report Predictive (RFSSRP) Prepared For AT&T



Site Name:	RADNOR RD.
FA#	10072516
USID:	3897
Site ID:	NA
Address:	5601 GOLDSBORO ROAD, BETHESDA, MD 20817
County:	MONTGOMERY
Latitude:	38.9767300
Longitude:	-77.1142120
Structure Type:	SELF-SUPPORT TOWER
Property Owner:	SALEM RADIO PROPERTIES
Pace Job:	MRWSH048291
RFDS Technology	5G NR 1SR CBAND

Report Information

Report Writer: Monti Kumar

Report Generated Date: 04-28-2023

Compliance Statement

AT&T Mobility Compliance Statement: Based on the information collected, AT&T Mobility will be Compliant when the remediation recommended in section 5 or appropriate remediation determined by AT&T is implemented

AT&T Proprietary (Internal use Only). Not for use or disclosure outside the AT&T Companies,
Except under written agreement. © 2023 AT&T Intellectual property. All rights Reserved.

Table of Contents

1. Executive Summary 3
1.1 Site Summary 3
1.2 Signage Summary (Proposed) 3
1.3 List of Documents used to prepare this Report 3
2. Site Scale Map 4
3. Antenna Inventory 5
4. Predicted Emission 10
4.1 Predictive Cumulative MPE Contribution from All Sources at Shelter1 &2 Level (10 ft.) 10
4.2 Predictive Cumulative MPE Contribution from All Sources at Ground Level (0 ft.) 11
5. Statement of Compliance 12
5.1 Statement of AT&T Mobility Compliance 12
Appendix A – Statement of Limiting Conditions 14
Appendix B – FCC Guidelines and Emissions Threshold Limits 15
Appendix C – Rules & Regulations 17
Appendix D – General Safety Recommendations 18
Appendix E – References 19
Appendix F – Proprietary Statement 22

AT&T Proprietary (Internal use Only). Not for use or disclosure outside the AT&T Companies,
Except under written agreement. © 2023 AT&T Intellectual property. All rights Reserved.

1. Executive Summary

1.1 Site Summary

Max Predictive Spatial Average MPE% & Location on Site (General Public)	0.42% on Ground Level & at AT&T Sec-A antenna no. #2-1
Max Predictive Spatial Average MPE% on Ground (General Public)	0.42%
AT&T Mobility Site Compliance	AT&T Mobility will be Compliant by implementing remediation recommended as per section 5 in this report.

TABLE 1: Site Summary

1.2 Signage Summary (Proposed)

AT&T Signage Locations	Sign Type										
	Safety Instructions	Notice Sign 2	Caution Sign 2	Caution Sign 2A	Caution Sign 2B	Caution Sign 2C	Caution 7"x7"	Warning Sign 1B	RF Exposure Map	Lock	Barriers
Self-support Tower					1						
Alpha											
Beta											
Gamma											

TABLE 2: Signage Summary (Proposed)

1.3 List of Documents used to prepare this Report

- 10072516_FCD_Rev 4_RADNOR RD_04.21.2023
- WASHINGTON-D.C.-MARYLAND_WASHINGTON-DC-BALTIMORE_RADNOR-RD_2023-5G-NR-Radio_5G-NR-1SR-CBAND_aa913p_2251A12P0H_10072516_3897_04-13-2021_As-Built-In-Prog
- 10072516_DE113_Structural Analysis Rev 0_Radnor_Pass_4.4.2023
- 7WAN097B_Anchor_5_2023-04-25

AT&T Proprietary (Internal use Only). Not for use or disclosure outside the AT&T Companies,
Except under written agreement. © 2023 AT&T Intellectual property. All rights Reserved.

2. Site Scale Map

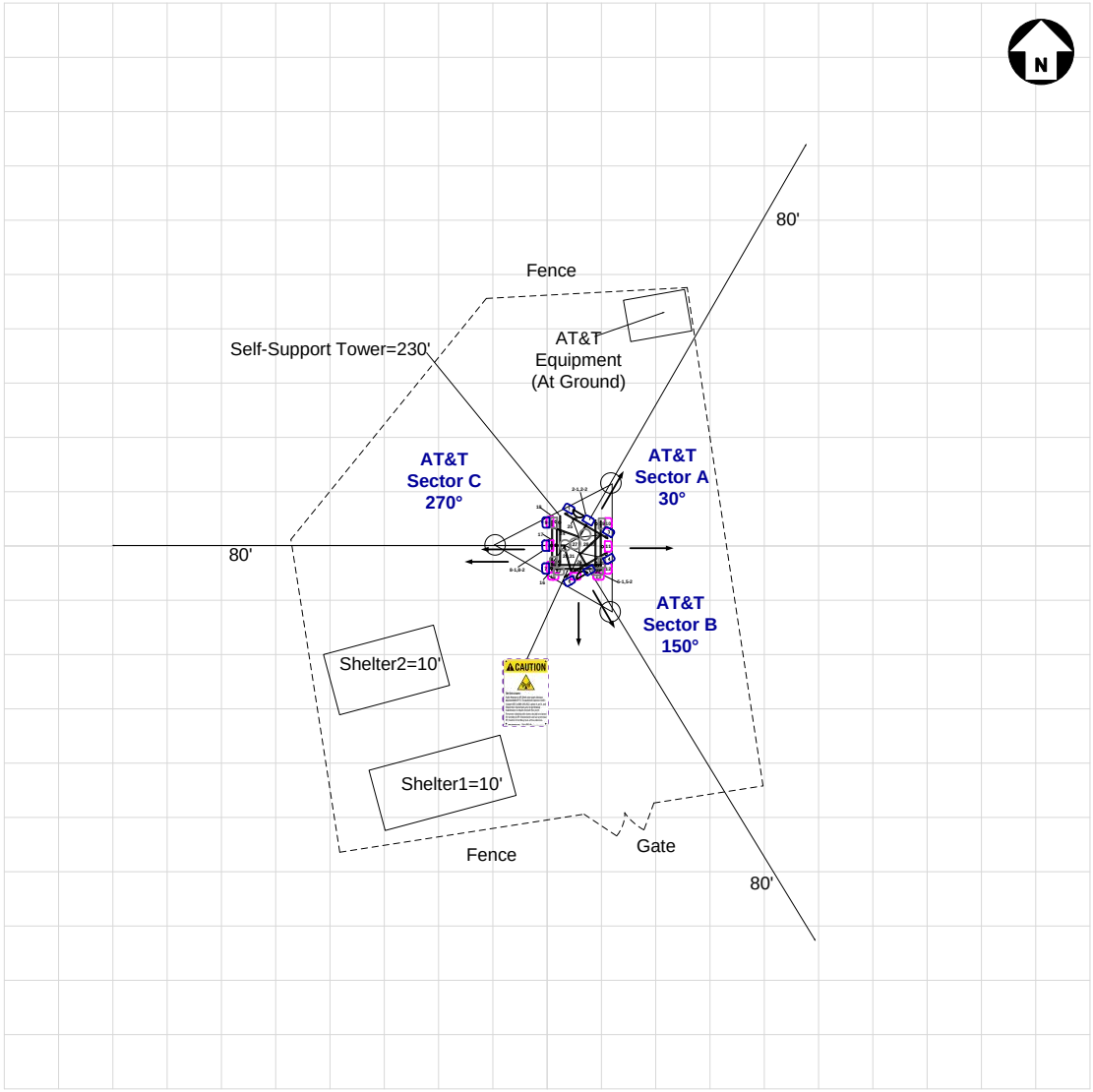

AT&T Antenna	Proposed	Proposed Signage										
Panel	Barrier	Safety Instructions	Notice 2	Caution 2	Caution 2A	Caution 2B	Caution 2C	Caution 7"x7"	Warning 1B	RF Exposure Map	Lock	***Map Scale = 10 ft***
OMNI	Posts											

AT&T Proprietary (Internal use Only). Not for use or disclosure outside the AT&T Companies,
Except under written agreement. © 2023 AT&T Intellectual property. All rights Reserved.

3. Antenna Inventory

Ant ID	Operator	Antenna Mfg	Antenna Model	Antenna Type	FREQ. (MHz)	TECH.	Az (°)	EDT (°)	EDT Range for analysis (°)	MDT (°)	HBW (°)	Antenna Gain (dBd)	Antenna Aperture (ft)	Transmitter Power (Watts)	Total Loss (dB)	Total ERP (Watts)	Total EIRP (Watts)
1	AT&T	Commscope	NNHH-65C-R4	Panel	850	5G	30	-	2-12	0	71	13.95	8	120.00	0.5	2655.71	4356.94
1	AT&T	Commscope	NNHH-65C-R4	Panel	1900	LTE/5G	30	-	2-12	0	59	16.65	8	90.00	0.5	3708.88	6084.75
2-1	AT&T	Nokia	AEQU_N78^	Panel	3450	5G	30	6	6	0	13	22.62	2.46	54.22*	0	9912.11*	16261.7*
2-2	AT&T	Nokia	AEQK_N77^	Panel	3840	5G	30	6	6	0	13	22.62	2.46	54.22*	0	9912.11*	16261.7*
3	AT&T	Commscope	NNH4-65C-R6	Panel	700	LTE(B12)	30	-	2-12	0	75	13.55	8	120.00	0.5	2422.04	3973.57
3	AT&T	Commscope	NNH4-65C-R6	Panel	700	LTE(FN)	30	-	2-12	0	75	13.55	8	120.00	0.5	2422.04	3973.57
3	AT&T	Commscope	NNH4-65C-R6	Panel	700	LTE(B29)	30	-	2-12	0	75	13.55	8	37.50	0.5	756.89	1241.74
3	AT&T	Commscope	NNH4-65C-R6	Panel	2100	LTE/5G	30	-	2-12	0	61	15.55	8	135.00	0.5	4318.51	7084.90
3	AT&T	Commscope	NNH4-65C-R6	Panel	2300	LTE	30	-	2-12	0	59	15.65	8	75.00	0.5	2455.06	4027.74
4	AT&T	Commscope	NNHH-65C-R4	Panel	850	5G	150	-	2-12	0	71	13.95	8	120.00	0.5	2655.71	4356.94
4	AT&T	Commscope	NNHH-65C-R4	Panel	1900	LTE/5G	150	-	2-12	0	59	16.65	8	90.00	0.5	3708.88	6084.75
5-1	AT&T	Nokia	AEQU_N78^	Panel	3450	5G	150	6	6	0	13	22.62	2.46	54.22*	0	9912.11*	16261.7*
5-2	AT&T	Nokia	AEQK_N77^	Panel	3840	5G	150	6	6	0	13	22.62	2.46	54.22*	0	9912.11*	16261.7*
6	AT&T	Commscope	NNH4-65C-R6	Panel	700	LTE(B12)	150	-	2-12	0	75	13.55	8	120.00	0.5	2422.04	3973.57
6	AT&T	Commscope	NNH4-65C-R6	Panel	700	LTE(FN)	150	-	2-12	0	75	13.55	8	120.00	0.5	2422.04	3973.57
6	AT&T	Commscope	NNH4-65C-R6	Panel	700	LTE(B29)	150	-	2-12	0	75	13.55	8	37.50	0.5	756.89	1241.74
6	AT&T	Commscope	NNH4-65C-R6	Panel	2100	LTE/5G	150	-	2-12	0	61	15.55	8	135.00	0.5	4318.51	7084.90
6	AT&T	Commscope	NNH4-65C-R6	Panel	2300	LTE	150	-	2-12	0	59	15.65	8	75.00	0.5	2455.06	4027.74
7	AT&T	Commscope	NNHH-65C-R4	Panel	850	5G	270	-	2-12	0	71	13.95	8	120.00	0.5	2655.71	4356.94
7	AT&T	Commscope	NNHH-65C-R4	Panel	1900	LTE/5G	270	-	2-12	0	59	16.65	8	90.00	0.5	3708.88	6084.75
8-1	AT&T	Nokia	AEQU_N78^	Panel	3450	5G	270	6	6	0	13	22.62	2.46	54.22*	0	9912.11*	16261.7*
8-2	AT&T	Nokia	AEQK_N77^	Panel	3840	5G	270	6	6	0	13	22.62	2.46	54.22*	0	9912.11*	16261.7*
9	AT&T	Commscope	NNH4-65C-R6	Panel	700	LTE(B12)	270	-	2-12	0	75	13.55	8	120.00	0.5	2422.04	3973.57
9	AT&T	Commscope	NNH4-65C-R6	Panel	700	LTE(FN)	270	-	2-12	0	75	13.55	8	120.00	0.5	2422.04	3973.57
9	AT&T	Commscope	NNH4-65C-R6	Panel	700	LTE(B29)	270	-	2-12	0	75	13.55	8	37.50	0.5	756.89	1241.74
9	AT&T	Commscope	NNH4-65C-R6	Panel	2100	LTE/5G	270	-	2-12	0	61	15.55	8	135.00	0.5	4318.51	7084.90
9	AT&T	Commscope	NNH4-65C-R6	Panel	2300	LTE	270	-	2-12	0	59	15.65	8	75.00	0.5	2455.06	4027.74

Table 3.1: Antenna Inventory Table

Note: **^ Mechanical Tilt value of "0°" MUST be retained for C-BAND and/or DoD AAS antenna(s) at all times to ensure that "EME (Predictive) Study" shall remain valid.**
Any change in EDT value beyond "EDT Range for Analysis (°)" as mentioned in the table above will require a new EME (Predictive) study.
* 75% TDD duty Cycle, 1.5dB Power Tolerance & 0.32 Power Reduction factor[1] are used to calculate Transmitter Power & ERP/EiRP

AT&T Proprietary (Internal use Only). Not for use or disclosure outside the AT&T Companies,
Except under written agreement. © 2023 AT&T Intellectual property. All rights Reserved.

Ant ID	Operator	Antenna Mfg	Antenna Model	Antenna Type	FREQ. (MHz)	TECH.	Az (°)	EDT (°)	EDT Range for analysis (°)	MDT (°)	HBW (°)	Antenna Gain (dBd)	Antenna Aperture (ft)	Transmitter Power (Watts)	Total Loss (dB)	Total ERP (Watts)	Total EIRP (Watts)
10	T-Mobile	Ericsson	AIR6449_LTE_B41^	Panel	2500	LTE	90	6	6	0	12.5	22.65	2.75	40.67*	0	7485.61*	12280.81*
10	T-Mobile	Ericsson	AIR6449_NR_B41^	Panel	2500	5G	90	6	6	0	12.5	22.65	2.75	67.78*	0	12476.02*	20468.02*
11	T-Mobile	RFS	APXVAALL24_43-U-NA20	Panel	600	LTE	90	-	2-12	0	64.3	12.95	8	60.00	0.5	1055.13	1730.42
11	T-Mobile	RFS	APXVAALL24_43-U-NA20	Panel	600	5G	90	-	2-12	0	64.3	12.95	8	60.00	0.5	1055.13	1730.42
11	T-Mobile	RFS	APXVAALL24_43-U-NA20	Panel	700	LTE	90	-	2-12	0	63.3	14.05	8	30.00	0.5	679.64	1114.61
11	T-Mobile	RFS	APXVAALL24_43-U-NA20	Panel	1900	LTE/5G	90	-	2-12	0	64.8	15.25	8	60.00	0.5	1791.87	2938.67
12	T-Mobile	Ericsson	KRD901146-1_A	Panel	1900	GSM	90	-	2-12	0	63.3	15.35	4.94	30.00	0.5	916.81	1503.56
12	T-Mobile	Ericsson	KRD901146-1_A	Panel	1900	LTE	90	-	2-12	0	63.3	15.35	4.94	60.00	0.5	1833.61	3007.12
12	T-Mobile	Ericsson	KRD901146-1_A	Panel	2100	LTE	90	-	2-12	0	63.3	15.35	4.94	120.00	0.5	3667.22	6014.25
13	T-Mobile	Ericsson	AIR6449_LTE_B41^	Panel	2500	LTE	180	6	6	0	12.5	22.65	2.75	40.67*	0	7485.61*	12280.81*
13	T-Mobile	Ericsson	AIR6449_NR_B41^	Panel	2500	5G	180	6	6	0	12.5	22.65	2.75	67.78*	0	12476.02*	20468.02*
14	T-Mobile	RFS	APXVAALL24_43-U-NA20	Panel	600	LTE	180	-	2-12	0	64.3	12.95	8	60.00	0.5	1055.13	1730.42
14	T-Mobile	RFS	APXVAALL24_43-U-NA20	Panel	600	5G	180	-	2-12	0	64.3	12.95	8	60.00	0.5	1055.13	1730.42
14	T-Mobile	RFS	APXVAALL24_43-U-NA20	Panel	700	LTE	180	-	2-12	0	63.3	14.05	8	30.00	0.5	679.64	1114.61
14	T-Mobile	RFS	APXVAALL24_43-U-NA20	Panel	1900	LTE/5G	180	-	2-12	0	64.8	15.25	8	60.00	0.5	1791.87	2938.67
15	T-Mobile	Ericsson	KRD901146-1_A	Panel	1900	GSM	180	-	2-12	0	63.3	15.35	4.94	30.00	0.5	916.81	1503.56
15	T-Mobile	Ericsson	KRD901146-1_A	Panel	1900	LTE	180	-	2-12	0	63.3	15.35	4.94	60.00	0.5	1833.61	3007.12
15	T-Mobile	Ericsson	KRD901146-1_A	Panel	2100	LTE	180	-	2-12	0	63.3	15.35	4.94	120.00	0.5	3667.22	6014.25
16	T-Mobile	Ericsson	AIR6449_LTE_B41^	Panel	2500	LTE	270	6	6	0	12.5	22.65	2.75	40.67*	0	7485.61*	12280.81*
16	T-Mobile	Ericsson	AIR6449_NR_B41^	Panel	2500	5G	270	6	6	0	12.5	22.65	2.75	67.78*	0	12476.02*	20468.02*
17	T-Mobile	RFS	APXVAALL24_43-U-NA20	Panel	600	LTE	270	-	2-12	0	64.3	12.95	8	60.00	0.5	1055.13	1730.42
17	T-Mobile	RFS	APXVAALL24_43-U-NA20	Panel	600	5G	270	-	2-12	0	64.3	12.95	8	60.00	0.5	1055.13	1730.42
17	T-Mobile	RFS	APXVAALL24_43-U-NA20	Panel	700	LTE	270	-	2-12	0	63.3	14.05	8	30.00	0.5	679.64	1114.61
17	T-Mobile	RFS	APXVAALL24_43-U-NA20	Panel	1900	LTE/5G	270	-	2-12	0	64.8	15.25	8	60.00	0.5	1791.87	2938.67
18	T-Mobile	Ericsson	KRD901146-1_A	Panel	1900	GSM	270	-	2-12	0	63.3	15.35	4.94	30.00	0.5	916.81	1503.56
18	T-Mobile	Ericsson	KRD901146-1_A	Panel	1900	LTE	270	-	2-12	0	63.3	15.35	4.94	60.00	0.5	1833.61	3007.12
18	T-Mobile	Ericsson	KRD901146-1_A	Panel	2100	LTE	270	-	2-12	0	63.3	15.35	4.94	120.00	0.5	3667.22	6014.25

Table 3.2: Antenna Inventory Table

Note: **^ Mechanical Tilt value of "0°" MUST be retained for C-BAND and/or DoD AAS antenna(s) at all times to ensure that "EME (Predictive) Study" shall remain valid.**
Any change in EDT value beyond "EDT Range for Analysis (°)" as mentioned in the table above will require a new EME (Predictive) study.
* 75% TDD duty Cycle, 1.5dB Power Tolerance & 0.32 Power Reduction factor[1] are used to calculate Transmitter Power & ERP/EiRP

AT&T Proprietary (Internal use Only). Not for use or disclosure outside the AT&T Companies,
Except under written agreement. © 2023 AT&T Intellectual property. All rights Reserved.

Ant ID	Operator	Antenna Mfg	Antenna Model	Antenna Type	FREQ. (MHz)	TECH.	Az (°)	EDT (°)	EDT Range for analysis (°)	MDT (°)	HBW (°)	Antenna Gain (dBd)	Antenna Aperture (ft)	Transmitter Power (Watts)	Total Loss (dB)	Total ERP (Watts)	Total EIRP (Watts)
19	Dish	JMA	MX08FRO665-20_V0F	Panel	600	5G	90	-	2-14	0	68	11.45	6	45.00	0.5	560.23	918.78
19	Dish	JMA	MX08FRO665-20_V0F	Panel	1900	5G	90	-	2-12	0	62	16.15	6	180.00	0.5	6611.08	10846.07
20	Dish	JMA	MX08FRO665-20_V0F	Panel	600	5G	90	-	2-14	0	68	11.45	6	45.00	0.5	560.23	918.78
20	Dish	JMA	MX08FRO665-20_V0F	Panel	2100	5G	90	-	2-12	0	64	16.65	6	120.00	0.5	4945.17	8113.00
21	Dish	JMA	MX08FRO665-20_V0F	Panel	600	5G	180	-	2-14	0	68	11.45	6	45.00	0.5	560.23	918.78
21	Dish	JMA	MX08FRO665-20_V0F	Panel	1900	5G	180	-	2-12	0	62	16.15	6	180.00	0.5	6611.08	10846.07
22	Dish	JMA	MX08FRO665-20_V0F	Panel	600	5G	180	-	2-14	0	68	11.45	6	45.00	0.5	560.23	918.78
22	Dish	JMA	MX08FRO665-20_V0F	Panel	2100	5G	180	-	2-12	0	64	16.65	6	120.00	0.5	4945.17	8113.00
23	Dish	JMA	MX08FRO665-20_V0F	Panel	600	5G	270	-	2-14	0	68	11.45	6	45.00	0.5	560.23	918.78
23	Dish	JMA	MX08FRO665-20_V0F	Panel	1900	5G	270	-	2-12	0	62	16.15	6	180.00	0.5	6611.08	10846.07
24	Dish	JMA	MX08FRO665-20_V0F	Panel	600	5G	270	-	2-14	0	68	11.45	6	45.00	0.5	560.23	918.78
24	Dish	JMA	MX08FRO665-20_V0F	Panel	2100	5G	270	-	2-12	0	64	16.65	6	120.00	0.5	4945.17	8113.00
25	WIAD	Generic	Generic	Microwave	11200	Unknown	30	-	0	0	4	36.85	4	0.30	0.3	1355.57	2223.93
26	Mont Co.	Generic	Generic	Microwave	11200	Unknown	150	-	0	0	4	36.85	4	0.30	0.3	1355.57	2223.93
27	WIAD	Generic	Generic	Omni	850	LTE	360	-	0	0	360	8.78	12	60.00	0.3	422.82	693.67
28	WAVA	Generic	Generic	Omni	850	LTE	360	-	0	0	360	6.36	6	60.00	0.3	242.19	397.33
29	Mont Co.	Generic	Generic	Omni	850	LTE	360	-	0	0	360	6.36	6	60.00	0.3	242.19	397.33
30	Mont Co.	Generic	Generic	Omni	850	LTE	360	-	0	0	360	6.36	6	60.00	0.3	242.19	397.33
31	WAVA	Generic	Generic	Omni	850	LTE	360	-	0	0	360	6.36	6	60.00	0.3	242.19	397.33

Table 3.3: Antenna Inventory Table

Note: **^ Mechanical Tilt value of "0°" MUST be retained for C-BAND and/or DoD AAS antenna(s) at all times to ensure that "EME (Predictive) Study" shall remain valid.**
Any change in EDT value beyond "EDT Range for Analysis (°)" as mentioned in the table above will require a new EME (Predictive) study.
* 75% TDD duty Cycle, 1.5dB Power Tolerance & 0.32 Power Reduction factor[1] are used to calculate Transmitter Power & ERP/EiRP

AT&T Proprietary (Internal use Only). Not for use or disclosure outside the AT&T Companies,
Except under written agreement. © 2023 AT&T Intellectual property. All rights Reserved.

Antenna Heights (Z)

Ant ID	Operator	Antenna Radiation Centerline
1	AT&T	154'-0"
2-1	AT&T	155'-9"
2-2	AT&T	152'-3"
3	AT&T	154'-0"
4	AT&T	154'-0"
5-1	AT&T	155'-9"
5-2	AT&T	152'-3"
6	AT&T	154'-0"
7	AT&T	154'-0"
8-1	AT&T	155'-9"
8-2	AT&T	152'-3"
9	AT&T	154'-0"
10	T-Mobile	165'-0"
11	T-Mobile	165'-0"
12	T-Mobile	165'-0"
13	T-Mobile	165'-0"
14	T-Mobile	165'-0"
15	T-Mobile	165'-0"
16	T-Mobile	165'-0"
17	T-Mobile	165'-0"
18	T-Mobile	165'-0"

Table 3.4: Antenna Height(s) Summary Table

AT&T Proprietary (Internal use Only). Not for use or disclosure outside the AT&T Companies,
Except under written agreement. © 2023 AT&T Intellectual property. All rights Reserved.

Ant ID	Operator	Antenna Radiation Centerline
19	Dish	175'-0"
20	Dish	175'-0"
21	Dish	175'-0"
22	Dish	175'-0"
23	Dish	175'-0"
24	Dish	175'-0"
25	WIAD	227'-0"
26	Mont Co.	117'-0"
27	WIAD	262'-0"
28	WAVA	210'-0"
29	Mont Co.	207'-0"
30	Mont Co.	197'-0"
31	WAVA	113'-0"

Table 3.5: Antenna Height(s) Summary Table

AT&T Proprietary (Internal use Only). Not for use or disclosure outside the AT&T Companies,
Except under written agreement. © 2023 AT&T Intellectual property. All rights Reserved.

4. Predicted Emission

4.1 Predictive Cumulative MPE Contribution from All Sources at Shelter1 &2 Level (10 ft.)

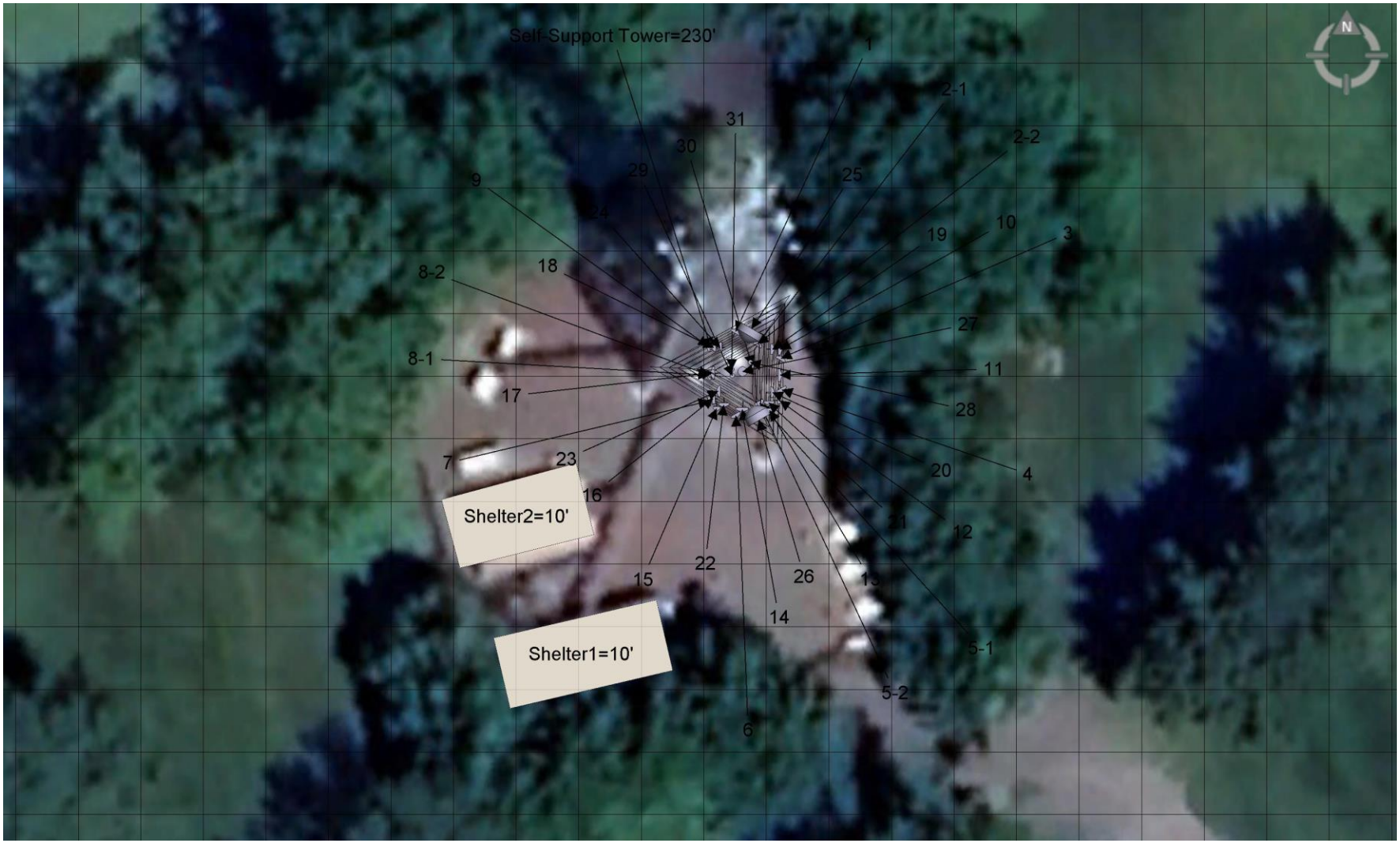

Max. Predictive Spatial Average MPE% = **0.32%**

Proposed Barrier
Proposed Posts

% of FCC General Public Exposure Limit (Predictive Spatial Average)

Non-Simulated	0-5	5-100	100-500	500-5000	>5000

Map Scale = 10 ft

AT&T Proprietary (Internal use Only). Not for use or disclosure outside the AT&T Companies,
Except under written agreement. © 2023 AT&T Intellectual property. All rights Reserved.

4.2 *Predictive Cumulative MPE Contribution from All Sources at Ground Level (0 ft.)*

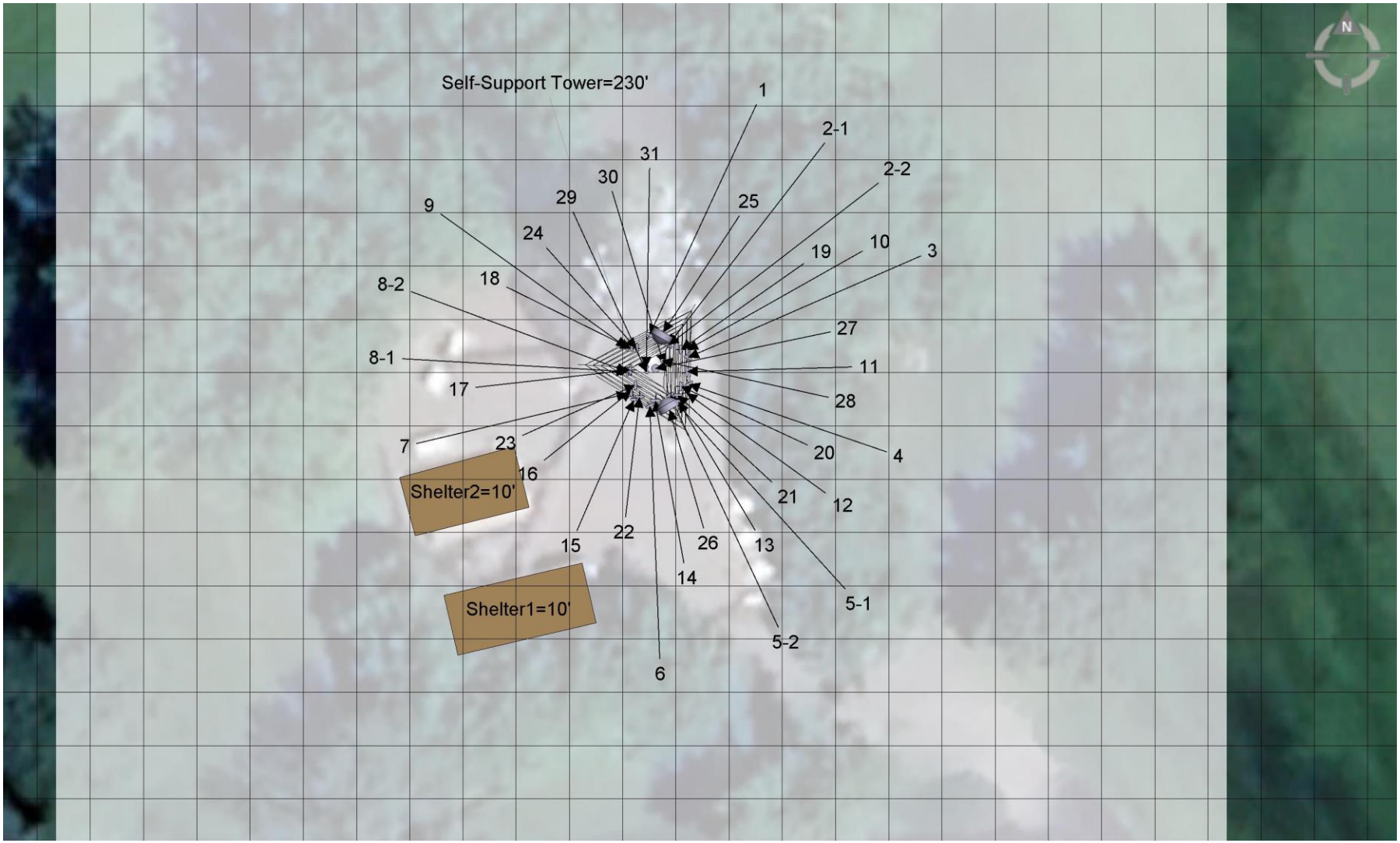

Max. Predictive Spatial Average MPE% = **0.42%**

Proposed Barrier
Proposed Posts

% of FCC General Public Exposure Limit (Predictive Spatial Average)

Non-Simulated	0-5	5-100	100-500	500-5000	>5000

Map Scale = 10 ft

AT&T Proprietary (Internal use Only). Not for use or disclosure outside the AT&T Companies,
Except under written agreement. © 2023 AT&T Intellectual property. All rights Reserved.

5. Statement of Compliance

5.1 Statement of AT&T Mobility Compliance

At the time of our Analysis, AT&T Mobility is required to take action to fulfill their Obligations to comply with the FCC's mandate as defined in OET-65

Recommendations

AT&T Alpha Sector:

- No action Required.

AT&T Beta Sector:

- No action Required.

AT&T Gamma Sector:

- No action Required.

Self-Support Tower:

- One Caution 2B Sign to be posted on the Tower at the climbing access, facing outwards so approaching people can see as shown in "Recommendations Map – Detailed View" on page 13. (1 Total Sign)

AT&T Proprietary (Internal use Only). Not for use or disclosure outside the AT&T Companies,
Except under written agreement. © 2023 AT&T Intellectual property. All rights Reserved.

Recommendations Map – Detailed View

Self-Support Tower

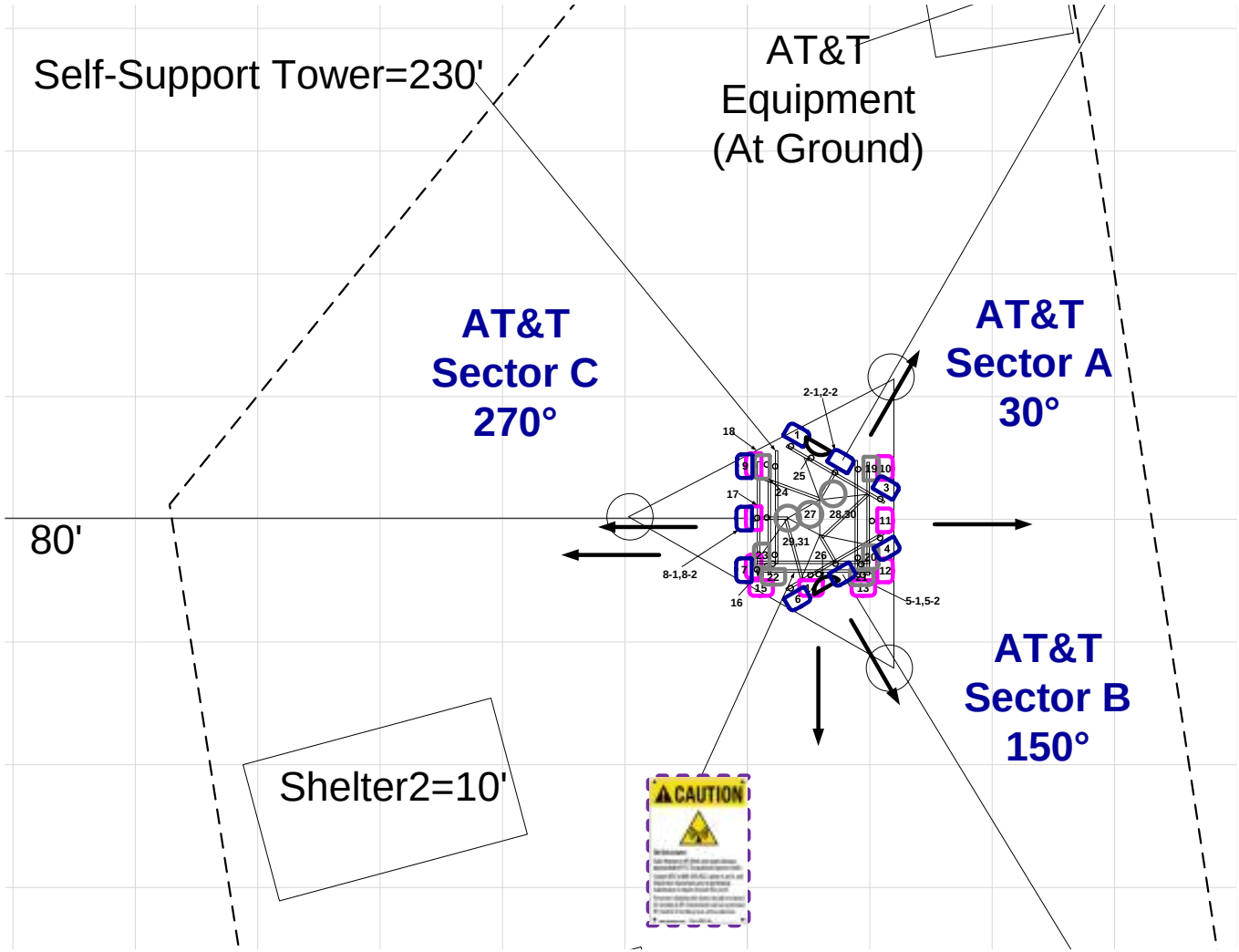

AT&T Antenna	Proposed	Proposed Signage										Map Scale = 10 ft
Panel	Barrier	Safety Instructions	Notice 2	Caution 2	Caution 2A	Caution 2B	Caution 2C	Caution 7"x7"	Warning 1B	RF Exposure Map	Lock	
OMNI	Posts											

AT&T Proprietary (Internal use Only). Not for use or disclosure outside the AT&T Companies,
Except under written agreement. © 2023 AT&T Intellectual property. All rights Reserved.

Appendix A – Statement of Limiting Conditions

General Model Assumptions

In this site compliance report, it is assumed that all antennas are operating at full power at all times. AT&T has further recommended to assume a 75% duty cycle of maximum radiated power for all LTE & 5G carriers (& consider 100% duty cycle for all UMTS carriers).

In this site compliance report, it is assumed that Mechanical Tilt value of "0°" MUST be retained for C-BAND and/or DoD AAS^ antenna(s) at all times to ensure that "EME (Predictive) Study" shall remain valid.

AT&T recommended to consider - For C-BAND and/or DoD AAS^ antenna(s) 75% TDD duty Cycle, 1.5dB Power Tolerance & 0.32 Power Reduction factor[1] are used to calculate Transmitter Power & ERP/EiRP.

AT&T recommended to use worst-case (Small E-tilt Range) tilts for the simulations.

***Power Reduction Factor**: IEC Standard 62232: 2017 allows for a statistically conservative power density model to more realistically define the RF exposure area. AT&T recommends a "0.32" factor to calculate the "Actual Maximum" (time averaged) power value, which accounts for "Beam Scanning," "Scheduling," and "RBS Utilization" This recommended value is a conservative figure modelled and supported by other vendors and through measurements published in scientific articles and white papers by IEEE and others. Those publication are listed below:*

1. IEEE Access, Time-Averaged Realistic Maximum Power Levels for the Assessment of RF Exposure for 5G Radio Base Stations Using Massive MIMO (Published Sept. 18, 2017 / BJÖRN THORS, ANDERS FURUSKÄR, DAVIDE COLOMBI, AND CHRISTER TÖRNEVIK)
2. IEEE Explore, A Statistical Approach for RF Exposure Compliance Boundary Assessment in Massive MIMO Systems (Published Jan. 25, 2018 / Paolo Baracca, Andreas Weber, Thorsten Wild, Christophe Grangeat)
3. IEEE Access, In-situ Measurement Methodology for the Assessment of 5G NR Massive MIMO Base Station Exposure at Sub-6 GHz Frequencies (Published Dec. 20, 2019 / SAM AERTS, LEEN VERLOOCK, MATTHIAS VAN DEN BOSSCHE, DAVIDE COLOMBI, LUC MARTENS, CHRISTER TÖRNEVIK AND WOUT JOSEPH)
4. Applied Sciences, Analysis of the Actual Power and EMF Exposure from Base Stations in a Commercial 5G Network (Published July 30, 2020 / Davide Colombi, Paramananda Joshi, Bo Xu, Fatemeh Ghasemifard, Vignesh Narasaraju and Christer Törnevik)
5. Ofcom Technical Report, Electromagnetic Field (EMF) measurements near 5G mobile phone base stations (Published Feb. 21, 2020 / Davide Colombi, Paramananda Joshi, Bo Xu, Fatemeh Ghasemifard, Vignesh Narasaraju and Christer Törnevik)

MobileComm believes these areas to be safe for entry by occupationally trained personnel utilizing appropriate personal protective equipment (in most cases, a personal monitor). Thus, at any time, if power density measurements were made, we believe the real time measurements would indicate levels below those depicted in the RF emission diagram(s) in this report. By modelling in this way, MobileComm has conservatively shown exclusion areas – areas that should not be entered without the use of a personal monitor, carriers reducing power, or performing real-time measurements to indicate real-time exposure levels.

Use of Generic Antennas

For the purposes of this report, the use of "Generic" as an antenna model, or "Other Carrier" for an operator means the information about a carrier, their FCC license and/or antenna information was not provided and could not be obtained while on site. In the event of unknown information, MobileComm will use our industry specific knowledge of equipment, antenna models, and transmit power to model the site. Information about similar facilities is used when the service is identified and associated with a particular antenna. If no information is available regarding the transmitting service associated with an unidentified antenna, using the antenna manufacturer's published data regarding the antenna's physical characteristics makes more conservative assumptions.

Where the frequency is unknown, MobileComm uses the closest frequency in the antenna's range that corresponds to the highest Maximum Exposure Limit (MPE), resulting in a conservative analysis.

AT&T Proprietary (Internal use Only). Not for use or disclosure outside the AT&T Companies,
Except under written agreement. © 2023 AT&T Intellectual property. All rights Reserved.

Appendix B – FCC Guidelines and Emissions Threshold Limits

All power density values used in this report were analyzed as a percentage of current Maximum Permissible Exposure (% MPE) as listed in the FCC OET Bulletin 65 Edition 97-01and ANSI/IEEE Std C95.1. The FCC regulates Maximum Permissible Exposure in units of microwatts per square centimeter (µW/cm2).The number of µW/cm2 calculated at each sample point is called the power density. The exposure limit for power density varies depending upon the frequencies being utilized. Wireless Carriers and Paging Services use different frequency bands each with different exposure limits, therefore it is necessary to report results and limits in terms of percent MPE rather than power density.

All results were compared to the FCC (Federal Communications Commission) radio frequency exposure rules, 47 CFR 1.1307(b)(1) – (b)(3), to determine compliance with the Maximum Permissible Exposure (MPE) limits for General Population/Uncontrolled environments as defined below.

General Population/Uncontrolled exposure limits apply to situations in which the general public may be exposed or in which persons who are exposed as a consequence of their employment may not be made fully aware of the potential for exposure or cannot exercise control over their exposure. Therefore, members of the general public would always be considered under this category when exposure is not employment related, for example, in the case of a telecommunications tower that exposes persons in a nearby residential area.

Public exposure to radio frequencies is regulated and enforced in units of microwatts per square centimeter (µW/cm2). The general population exposure limit for the 700 and 800 MHz Bands is approximately 467 µW/cm2 and 567 µW/cm2 respectively, and the general population exposure limit for the 1900 MHz PCS and 2100 MHz AWS bands is 1000 µW/cm2. Because each carrier will be using different frequency bands, and each frequency band has different exposure limits, it is necessary to report percent of MPE rather than power density.

Occupational/Controlled exposure limits apply to situations in which persons are exposed as a consequence of their employment and in which those persons who are exposed have been made fully aware of the potential for exposure, have been properly trained in RF safety and can exercise control over their exposure. Occupational/Controlled exposure limits also apply where exposure is of a transient nature as a result of incidental passage through a location where exposure levels may be above general population/uncontrolled limits (see below), as long as the exposed person has been made fully aware of the potential for exposure, have been trained in RF safety and can exercise control over his or her exposure by leaving the area or by some other appropriate means. The Occupational/Controlled exposure limits all utilized frequency bands is five (5) times the FCC's General Public / Uncontrolled exposure limit.

Additional details can be found in FCC OET 65.

AT&T Proprietary (Internal use Only). Not for use or disclosure outside the AT&T Companies,
Except under written agreement. © 2023 AT&T Intellectual property. All rights Reserved.

Table 1: Limits for Maximum Permissible Exposure (MPE)				
(A) Limits for Occupational/Controlled Exposure				
Frequency Range (MHz)	**Electric Field Strength (E) (V/m)**	**Magnetic Field Strength (H) (A/m)**	**Power Density (S) (mW/cm^2)**	**Averaging Time $[E]^2$, $[H]^2$, or S (minutes)**
0.3-3.0	614	1.63	(100)*	6
3.0-30	1842/f	4.89/f	($900/f^2$)*	6
30-300	61.4	0.163	1.0	6
300-I,500	--	--	f/300	6
1,500-100,000	--	--	5	6
(B) Limits for General Public/Uncontrolled Exposure				
Frequency Range (MHz)	**Electric Field Strength (E) (V/m)**	**Magnetic Field Strength (H) (A/m)**	**Power Density (S) (mW/cm^2)**	**Averaging Time $[E]^2$, $[H]^2$, or S (minutes)**
0.3-1.34	614	1.63	(100)*	30
1.34-30	824/f	2.19/f	($180/f^2$)*	30
30-300	27.5	0.073	0.2	30
300-I,500	--	--	f/1,500	30
1,500-100,000	--	--	1.0	30

AT&T Proprietary (Internal use Only). Not for use or disclosure outside the AT&T Companies,
Except under written agreement. © 2023 AT&T Intellectual property. All rights Reserved.

Appendix C – Rules & Regulations

Explanation of Applicable Rules and Regulations

FCC has set forth guidelines in OET Bulletin 65 for human exposure to radio frequency electromagnetic fields. Currently, there are two different levels of MPE - General Public MPE and Occupational MPE. An individual classified as Occupational can be defined as an individual who has received appropriate RF training and meets the conditions outlined below. General Public is defined as anyone who does not meet the conditions of being Occupational. FCC Rules and Regulations define compliance in terms of total exposure to total RF energy, regardless of location of or proximity to the sources of energy.

It is the responsibility of all licensees to ensure these guidelines are maintained at all times. It is the ongoing responsibility of all licensees composing the site to maintain ongoing compliance with FCC rules and regulations.

A building owner or site manager can use this report as part of an overall RF Health and Safety Policy. It is important for building owners/site managers to identify areas in excess of the General Population MPE and ensure that only persons qualified as Occupational are granted access to those areas.

Occupational Environment Explained

The FCC definition of Occupational exposure limits apply to persons who:

- *are exposed to RF energy as a consequence of their employment;*
- *have been made aware of the possibility of exposure; and*
- *can exercise control over their exposure.*

FCC guidelines go further to state that persons must complete RF Safety Awareness training and must be trained in the use of appropriate personal protective equipment.

In order to consider this site an Occupational Environment, the site must be controlled to prevent access by any individuals classified as the General Public. Compliance is also maintained when any non-occupational individuals (the General Public) are prevented from accessing areas indicated as Red or Yellow in the attached RF Emissions diagram. In addition, a person must be aware of the RF environment into which they are entering. This can be accomplished by an RF Safety Awareness class, and by appropriate written documentation such as this Site Compliance Report.

AT&T Proprietary (Internal use Only). Not for use or disclosure outside the AT&T Companies,
Except under written agreement. © 2023 AT&T Intellectual property. All rights Reserved.

Appendix D – General Safety Recommendations

The following are general recommendations appropriate for any site with accessible areas in excess of 100% General Public MPE. These recommendations are not specific to this site. These are safety recommendations appropriate for typical site management, building management, and other tenant operations.

1. All individuals needing access to the main site should be instructed to read and obey all posted placards and signs.

2. The site should be routinely inspected and this or similar report updated with the addition of any antennas or upon any changes to the RF environment including:

- *adding new antennas that may have been located on the site*
- *removing of any existing antennas*
- *changes in the radiating power or number of RF emitters*

3. Post the appropriate SAFETY INSTRUCTIONS, NOTICE, CAUTION & WARNING sign at the main site access point(s) and other locations as required. Note: Please refer to RF Exposure Diagrams in the report section above, to inform everyone who has access to this site that beyond posted signs there may be levels in excess of the limits prescribed by the FCC. The signs below are examples of signs meeting FCC guidelines.

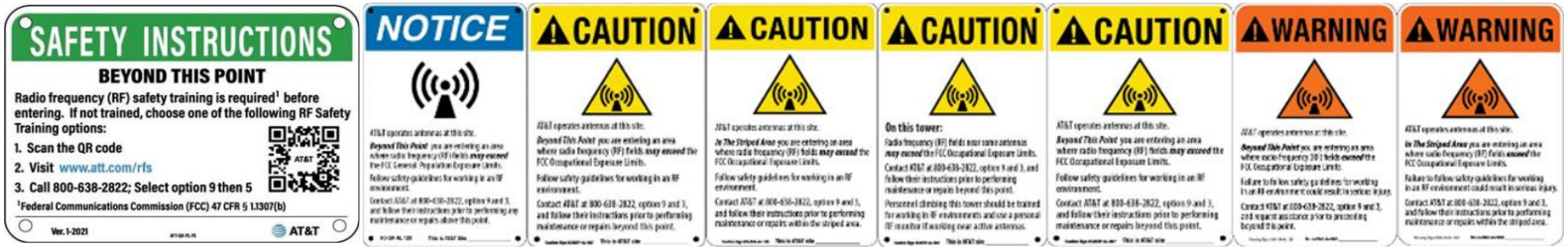

4. Ensure that the site door remains locked (or appropriately controlled) to deny access to the general public if deemed as policy by the building/site owner.

5. For a General Public environment the five color levels identified in measured RF emission diagram can be interpreted in the following manner:

- *White represents areas predicted to be greater than or equal to 0% and less than 1% of the MPE general public limits*
- *Green represents areas predicted to be greater than or equal to 1% and less than 100% of the MPE general public limits*
- *Blue represents areas predicted to be greater than or equal to 100% and lesser than 500% of the MPE general public limits.*
- *Yellow represents areas predicted to be greater than or equal to 500% and lesser than 5000% of the MPE general public limits.*
- *Red areas indicates predicted levels greater than or equal to 5000% of the MPE general public limits.*

AT&T Proprietary (Internal use Only). Not for use or disclosure outside the AT&T Companies,
Except under written agreement. © 2023 AT&T Intellectual property. All rights Reserved.

Appendix E – References

1 - FCC Definition

FCC defines an Occupational or Controlled environment as one where persons are exposed to RF fields as a consequence of their employment and where those persons exposed have been made fully aware of the potential for exposure and can exercise control over their exposure. Typical criteria for an Occupational or Controlled environment is restricted access (i.e. locked doors, gates, etc.) to areas where antennas are located coupled with proper RF warning signage.

FCC defines a site as a General Public or Uncontrolled environment when human exposure to RF fields occurs to the general public or in which persons who are exposed as a consequence of their employment may not be fully aware of the potential for exposure or cannot exercise control over the exposure. Typical criteria for a General Public or Uncontrolled environment are unrestricted access (i.e. unlocked or no restrictions) to areas where antennas are located without proper RF warning signage being posted.

2 - Physical Testing measurement procedure and Tools

The Narda Broadband Field Meter NBM-550 can make rapid conformance measurements with evaluation in the time domain when used in conjunction EA5091 probe. This probe is a so-called Shaped Probe, i.e. it is frequency weighted so that it automatically takes account of the FCC Occupational limit values. To collect data, the probe is pointed towards the potential source(s) of EME radiation and moved slowly from ground level up to slightly above head height (approx. 6 ft).

Spatial Average Measurement A technique used to average a minimum of ten (10) measurements taken in a ten (10) second interval from zero (0) to six (6) feet. This measurement is intended to model the average energy an average sized human body will absorb while present in an electromagnetic field of energy.

3 - Site Safety Procedures

The following items are general safety recommendations that should be administered on a site by site basis as needed by the carrier.

General Maintenance Work: *Any maintenance personnel required to work immediately in front of antennas and / or in areas indicated as above 100% of the Occupational MPE limits should coordinate with the wireless operators to disable transmitters during their work activities.*

Training and Qualification Verification: *All personnel accessing areas indicated as exceeding the General Population MPE limits should have a basic understanding of EME awareness and RF Safety procedures when working around transmitting antennas. Awareness training increases a workers understanding to potential RF exposure scenarios. Awareness can be achieved in a number of ways (e.g. videos, formal classroom lecture or internet based courses).*

Physical Access Control: *Access restrictions to transmitting antennas locations is the primary element in a site safety plan. Examples of access restrictions are as follows:*

- *Locked door or gate*
- *Alarmed door*
- *Locked ladder access*
- *Restrictive Barrier at antenna locations (e.g. Chain link with posted RF Sign)*

AT&T Proprietary (Internal use Only). Not for use or disclosure outside the AT&T Companies,
Except under written agreement. © 2023 AT&T Intellectual property. All rights Reserved.

RF Signage: *Everyone should obey all posted signs at all times. RF signs play an important role in properly warning a worker prior to entering into a potential RF Exposure area.*

Assume all antennas are active: *Due to the nature of telecommunications transmissions, an antenna transmits intermittently. Always assume an antenna is transmitting. Never stop in front of an antenna. If you have to pass by an antenna, move through as quickly and safely as possible thereby reducing any exposure to a minimum.*

Maintain a 3 foot clearance from all antennas: *There is a direct correlation between the strength of an EME field and the distance from the transmitting antenna. The further away from an antenna, the lower the corresponding EME field is.*

Rooftop RF Emissions Diagram: *Section 4 of this report contains an RF Emissions Diagram that outlines various theoretical Maximum Permissible Exposure (MPE) areas on the rooftop. This analysis is all theoretical and assumes a duty cycle of 75% for each transmitting antenna at full power. This analysis is a worst case scenario. This analysis is based on one of two access control criteria: General Public criteria means the access to the site is uncontrolled and anyone can gain access. Occupational criteria means the access is restricted and only properly trained individuals can gain access to the antenna locations.*

4 - Definitions

Compliance- *The determination of whether a site is safe or not with regards to Human Exposure to Radio Frequency Radiation from transmitting antennas.*

Decibel (dB) – *A unit for measuring power or strength of a signal.*

Duty Cycle – *The percent of pulse duration to the pulse period of a periodic pulse train. Also, may be a measure of the temporal transmission characteristic of an intermittently transmitting RF source such as a paging antenna by dividing average transmission duration by the average period for transmission. A duty cycle of 75% corresponds to continuous operation.*

Effective (or Equivalent) Isotropic Radiated Power (EIRP) – *The product of the power supplied to the antenna and the antenna gain in a given direction relative to an isotropic antenna, this product is divided by the cable losses*

Effective Radiated Power (ERP) – *In a given direction, the relative gain of a transmitting antenna with respect to the maximum directivity of a half wave dipole multiplied by the net power accepted by the antenna from the connecting transmitter.*

Gain (of an antenna in dbd) – *The ratio of the maximum intensity in a given direction to the maximum radiation in the same direction from a reference dipole. Gain is a measure of the relative efficiency of a directional antennas as compared to a reference dipole.*

General Population/Uncontrolled Environment – *Defined by the FCC, as an area where RFR exposure may occur to persons who are unaware of the potential for exposure and who have no control of their exposure. General Population is also referenced as General Public.*

Generic Antenna – *For the purposes of this report, the use of "Generic" as an antenna model means the antenna information was not provided and could not be obtained while on site. In the event of unknown information, MobileComm will use our industry specific knowledge of antenna models to select a worst case scenario antenna to model the site.*

Isotropic Antenna – *An antenna that is completely non-directional. In other words, an antenna that radiates energy equally in all directions.*

Maximum Measurement – *This measurement represents the single largest measurement recorded when performing a spatial average measurement.*

AT&T Proprietary (Internal use Only). Not for use or disclosure outside the AT&T Companies,
Except under written agreement. © 2023 AT&T Intellectual property. All rights Reserved.

Maximum Exposure Limit (MPE) – *The RMS and peak electric and magnetic field strength, their squares, or the plane-wave equivalent power densities associated with these fields to which a person may be exposed without harmful effect and with acceptable safety factor.*

Occupational/Controlled Environment – *Defined by the FCC, as an area where Radio Frequency Radiation (RFR) exposure may occur to persons who are aware of the potential for exposure as a condition of employment or specific activity and can exercise control over their exposure.*

Radio Frequency Radiation – *Electromagnetic waves that are propagated from antennas through space.*

Spatial Average Measurement – *A technique used to average a minimum of ten (10) measurements taken in a ten (10) second interval from zero (0) to six (6) feet. This measurement is intended to model the average energy an average sized human body will absorb while present in an electromagnetic field of energy.*

Transmitter Power Output (TPO) – *The radio frequency output power of a transmitter's final radio frequency stage as measured at the output terminal while connected to a load.*

AT&T Proprietary (Internal use Only). Not for use or disclosure outside the AT&T Companies,
Except under written agreement. © 2023 AT&T Intellectual property. All rights Reserved.

Appendix F – Proprietary Statement

This report was prepared for the use of AT&T Mobility, LLC to meet requirements specified in AT&T's corporate RF safety guidelines. It was performed in accordance with generally accepted practices of other consultants undertaking similar studies at the same time and in the same locale under like circumstances. The conclusions provided by MobileComm are based solely on the information provided by AT&T Mobility and all observations in this report are valid on the date of the investigation. Any additional information that becomes available concerning the site should be provided to MobileComm so that our conclusions may be revised and modified, if necessary. This report has been prepared in accordance with Standard Conditions for Engagement and authorized proposal, both of which are integral parts of this report. No other warranty, expressed or implied, is made.

AT&T Proprietary (Internal use Only). Not for use or disclosure outside the AT&T Companies,
Except under written agreement. © 2023 AT&T Intellectual property. All rights Reserved.

AT&T

SITE NAME: **RADNOR RD**

FA#: **10072516**

USID: **3897**

COUNTY: **MONTGOMERY COUNTY**

STRUCTURE TYPE: **EXISTING 230'-0" SELF SUPPORT TOWER**

PROJECT INFORMATION

SITE ADDRESS:	5601 GOLDSBORO ROAD BETHESDA, MD 20817
LATITUDE (NAD83):	38.9767300° N
LONGITUDE (NAD83):	−77.1142120° W
GROUND ELEVATION:	±363' (AMSL)
COUNTY:	MONTGOMERY COUNTY
JURISDICTION:	MONTGOMERY COUNTY
ELECTRIC PROVIDER:	TBD
PHONE:	---
TELCO PROVIDER:	TBD
PHONE:	---
OCCUPANCY TYPE:	UNMANNED
ADA COMPLIANCE	FACILITY IS UNMANNED AND NOT FOR HUMAN HABITATION.

APPLICANT:	AT&T MOBILITY 7150 STANDARD DRIVE HANOVER, MD 21076
TOWER OWNER:	SALEM RADIO PROPERTIES
ADDRESS:	----

CONTACT:	-----
PHONE:	-----
A&E FIRM:	TRYLON TSF
ADDRESS:	1825 W. WALNUT HILL LANE, STE#120 IRVING, TX 75038
CONTACT:	KATYA SERAVALLE
PHONE:	1−855−669−5421
EMAIL:	KATYA.SERAVALLE@TRYLON.COM

AREA MAP

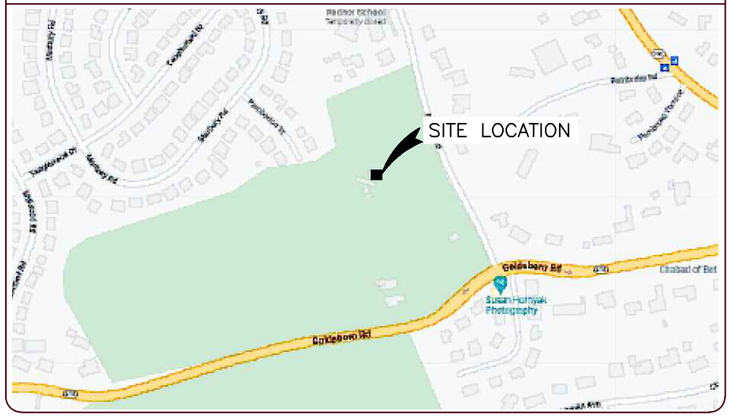

LOCATION MAP

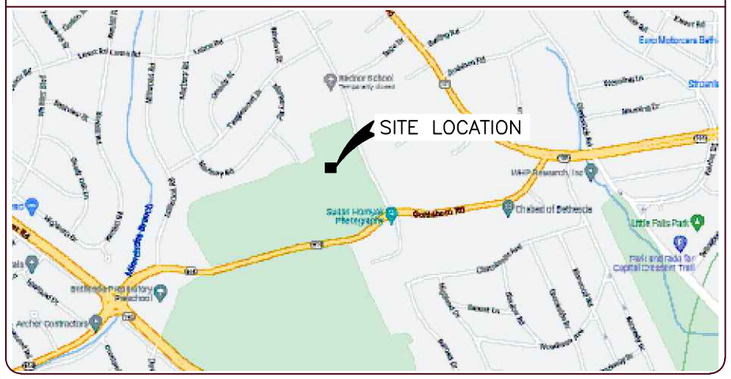

PROJECT DESCRIPTION

THE SCOPE OF WORK WILL BE COMPRISED OF:

- REMOVE EXISTING UMTS CABINET
- REMOVE (1) EXISTING RACK MOUNTED DC12 UNIT
- REMOVE (6) EXISTING ANTENNAS
- REMOVE (6) EXISTING COAX CABLES
- REMOVE (5) EXISTING DC TRUNKS
- REMOVE (3) EXISTING FIBER TRUNKS
- RELOCATE/REPLUMB (6) EXISTING RRHS
- RELOCATE (1) EXISTING FILTER
- REMOVE (1) ABIL (1) ASIK EXISTING EQUIPMENT CARDS
- INSTALL (3) NEW ANTENNAS
- INSTALL NEW NOKIA AEQK + AEQU STACKED ANTENNAS (2 PER SECTOR, 6 TOTAL)
- INSTALL (9) PWRT−606−S DC TRUNKS
- INSTALL (3) RFFT−48SM−001 FIBER TRUNK
- INSTALL (3) NEW DC9−48−60−24−8C−EV UNITS
- INSTALL (2) NEW RACK MOUNTED DC12 UNITS
- INSTALL (1) NEW FIBER MANAGEMENT TRAY
- INSTALL (1) NEW FIBER STORAGE BOX
- INSTALL (2) NEW RECTIFIERS
- INSTALL (3) NEW 170AH 48VDC BATTERY STRINGS
- INSTALL (3) ABIO, (1) ASIL NEW EQUIPMENT CARDS
- INSTALL (1) NEW FE−14192−IR FIBER MANAGEMENT PANEL
- INSTALL (1) NEW FB−SLODF013−024 FIBER PATCH PANEL, TERMINATE PROPOSED FIBER TRUNKS AT PATCH PANEL
- INSTALL (24) "12 FEEDS 12 RETURNS" 8AWG TELCOFLEX II FROM POWER PLANT TO NEW DC12 UNIT TO BE RUN IN THE CABLE LADDER ABOVE WITH FISHPAPER AND WAX STRING PER NEW DC12 UNIT

RFDS

RFDS ID: 4469754 ISSUE DATE: 10/05/2021 REVISION: V2021_0.2 UPDATED BY: aa913p

DATE/TIME UPDATED: 4/13/2022 @ 9:41:32 PM

GENERAL NOTES

THE FACILITY IS UNMANNED AND NOT FOR HUMAN HABITATION. A TECHNICIAN WILL VISIT THE SITE AS REQUIRED FOR ROUTINE MAINTENANCE. THE PROJECT WILL NOT RESULT IN ANY SIGNIFICANT DISTURBANCE OR EFFECT ON DRAINAGE; NO SANITARY SEWER SERVICE, PORTABLE WATER, OR TRASH DISPOSAL IS REQUIRED, NO COMMERCIAL SIGNAGE AND NO LANDSCAPING IS PROPOSED.

DO NOT SCALE DRAWINGS

ALL DRAWINGS CONTAINED HEREIN ARE FORMATTED FOR A 11"X17" SET. CONTRACTOR SHALL VERIFY ALL PLANS AND EXISTING DIMENSIONS AND CONDITIONS ON THE JOB SITE AND SHALL IMMEDIATELY NOTIFY THE ARCHITECT/ENGINEER IN WRITING OF ANY DISCREPANCIES BEFORE PROCEEDING WITH THE WORK OR BE RESPONSIBLE FOR SAME.

CODE COMPLIANCE

ALL WORK & MATERIALS SHALL BE PERFORMED & INSTALLED IN ACCORDANCE WITH THE CURRENT EDITIONS OF THE FOLLOWING CODES AS ADOPTED BY THE LOCAL GOVERNING AUTHORITIES. NOTHING IN THESE PLANS IS TO BE CONSTRUED TO PERMIT WORK NOT CONFORMING TO THESE CODES:

- 2018 INTERNATIONAL BUILDING CODE
- 2018 NATIONAL ELECTRICAL CODE
- 2018 INTERNATIONAL MECHANICAL CODE
- 2015 NATIONAL FIRE PROTECTION ASSOCIATION
- AMERICAN INSTITUTE OF STEEL CONSTRUCTION (AISC)
- TIA−222−H
- TIA 607
- TELCORDIA GR−1275
- 2018 INTERNATIONAL ENERGY CONSERVATION CODE (IECC)
- 2018 INTERNATIONAL MECHANICAL CODE (IMC)
- MONTGOMERY COUNTY CODE CHAPTER 8 (MECH)
- MONTGOMERY COUNTY CODE CHAPTER 17 (ELEC)
- NFPA 70 (NATIONAL ELECTRICAL CODE)
- 2015 NFPA 101 LIFE SAFETY CODE
- 2012 INTERNATIONAL GREEN CONSTRUCTION CODE
- 2015 IBC AMENDMENTS

DRIVING DIRECTIONS

FROM 7150 STANDARD DRIVE HANOVER, MD 21076:
HEAD SOUTHWEST TOWARD STANDARD DR, TURN LEFT TOWARD STANDARD DR, TURN RIGHT ONTO STANDARD DR, TURN LEFT ONTO PARKWAY DR, TURN RIGHT ONTO PARK CIR DR, TURN LEFT ONTO COCA COLA DR, SLIGHT RIGHT TO MERGE WITH MD−100 W TOWARD ELLICOTT CITY, MERGE WITH MD−100 W, TAKE THE EXIT ONTO I−95 S TOWARD WASHINGTON, TAKE EXIT 27 W TO MERGE WITH I−495 W TOWARD SILVER SPRING, USE THE RIGHT 2 LANES TO TAKE EXIT 33 TOWARD MD−185 S/CONNECTICUT AVE, KEEP LEFT AT THE Y JUNCTION, FOLLOW SIGNS FOR CHEVY CHASE, USE ANY LANE TO TURN LEFT ONTO MD−185 S/CONNECTICUT AVE, TURN RIGHT ONTO MD−191, TURN LEFT ONTO GOLDSBORO RD, TURN RIGHT ONTO RADNOR RD

811 Know what's below. Call before you dig.

TO OBTAIN LOCATION OF PARTICIPANTS UNDERGROUND FACILITIES BEFORE YOU DIG IN MARYLAND (EAST OF CHESAPEAKE BAY), CALL MISS UTILITY OF DELMARVA
TOLL FREE: 1-800-282-8555 OR www.missutilitydelmarva.net
MARYLAND STATUTE REQUIRES MIN OF 2 WORKING DAYS NOTICE BEFORE YOU EXCAVATE

APPROVALS

AT&T (CM):	DATE:
SMARTLINK (PM):	DATE:
RF ENGINEER:	DATE:
SITE ACQUISITION:	DATE:
LANDLORD:	DATE:

PROFESSIONAL CERTIFICATION

PROFESSIONAL CERTIFICATION: I HEREBY CERTIFY THAT THESE DOCUMENTS WERE PREPARED OR APPROVED BY ME, AND THAT I AM A DULY LICENSED PROFESSIONAL ENGINEER UNDER THE LAWS OF THE STATE OF MARYLAND, LICENSE NO._____. EXPIRATION DATE: _____.

SHEET INDEX

SHEET #	DESCRIPTION	REVISION #
T−1	TITLE SHEET	5
C−1	COMPOUND PLAN	5
C−1.1	RF SAFETY SURVEY REPORT	5
C−2	EQUIPMENT PLAN	5
C−3	TOWER ELEVATION	5
C−4	ANTENNA LAYOUTS	5
C−4.1	PROPOSED ANTENNA SCHEDULE	5
C−5	EQUIPMENT DETAILS	5
C−6	EQUIPMENT DETAILS	5
C−7	EQUIPMENT DETAILS	5
E−1	DC SURGE SUPPRESSION WIRING DIAGRAM	5
E−2	AC PANEL SCHEDULE	5
E−3	POWER LOAD CALCULATIONS	5
RF−1	RF PLUMBING DIAGRAM	5
G−1	GROUNDING DETAILS	5
GN−1	GENERAL NOTES	5

AT&T

smartlink

Trylon

DRAWING SCALES ARE INTENDED FOR 11"x17" SIZE PRINTED MEDIA ONLY.

SUBMITTALS

REV	DATE	DESCRIPTION	BY
0	08/05/22	100% FCD	TFL
1	08/26/22	100% FCD	VP
2	03/30/23	100% FCD	TFL
3	04/11/23	100% FCD	RC
4	04/21/23	100% FCD	RC
5	05/05/23	100% FCD	RC

STATE OF MARYLAND · MATTHEW K. JAMESON · 44680 · PROFESSIONAL ENGINEER

PROFESSIONAL CERTIFICATE
I HEREBY CERTIFY THAT THESE DOCUMENTS WERE PREPARED OR APPROVED BY ME, AND THAT I AM A DULY LICENSED PROFESSIONAL ENGINEER UNDER THE LAWS OF THE STATE OF MARYLAND, LICENSE NO. 44680, EXPIRATION DATE 12/10/2023

PROJECT TITLE

USID: 3897
FA#: 10072516

RADNOR RD

5601 GOLDSBORO ROAD
BETHESDA, MD 20817

EXISTING SELF SUPPORT TOWER

SHEET DESCRIPTION

TITLE SHEET

SHEET NO.

T−1

GENERAL NOTES:

1. THE SUBCONTRACTOR SHALL GIVE ALL NOTICES AND REGULATIONS AND LAWFUL ORDERS OF ANY PUBLIC AUTHORITY, MUNICIPAL AND UTILITY COMPANY SPECIFICATIONS, AND LOCAL AND STATE JURISDICTIONAL CODES BEARING ON THE PERFORMANCE OF THE WORK. THE WORK PERFORMED ON THE PROJECT AND THE MATERIALS INSTALLED SHALL BE IN STRICT ACCORDANCE WITH ALL APPLICABLE CODES, REGULATIONS AND ORDINANCES.
2. THE ARCHITECT/ENGINEER HAVE MADE EVERY EFFORT TO SET FORTH IN THE CONSTRUCTION AND CONTRACT DOCUMENTS THE COMPLETE SCOPE OF WORK. THE SUBCONTRACTOR BIDDING THE JOB IS NEVERTHELESS CAUTIONED THAT MINOR OMISSIONS OR ERRORS IN THE DRAWINGS AND OR SPECIFICATIONS SHALL NOT EXCUSE SAID SUBCONTRACTOR FROM COMPLETING THE PROJECT AND IMPROVEMENTS IN ACCORDANCE WITH THE INTENT OF THESE DOCUMENTS.
3. THE SUBCONTRACTOR OR BIDDER SHALL BEAR THE RESPONSIBILITY OF NOTIFYING (IN WRITING) THE AT&T REPRESENTATIVE OF ANY CONFLICTS, ERRORS OR OMISSIONS PRIOR TO THE SUBMISSION OF SUBCONTRACTOR'S PROPOSAL OR PERFORMANCE OF WORK. IN THE EVENT OF DISCREPANCIES, THE SUBCONTRACTOR SHALL PRICE THE MORE COSTLY OR EXTENSIVE WORK, UNLESS DIRECTED IN WRITING OTHERWISE.
4. THE SCOPE OF WORK SHALL INCLUDE FURNISHING ALL MATERIALS, EQUIPMENT, LABOR AND ALL OTHER MATERIAL AND LABOR DEEMED NECESSARY TO COMPLETE THE WORK/PROJECT AS DESCRIBED HEREIN.
5. THE SUBCONTRACTOR SHALL VISIT THE JOB SITE PRIOR TO THE SUBMISSION OF BIDS OR PERFORMING WORK TO FAMILIARIZE THEMSELVES WITH THE FIELD CONDITIONS AND TO VERIFY THAT THE PROJECT CAN BE CONSTRUCTED IN ACCORDANCE WITH THE CONTRACT DOCUMENTS.
6. THE SUBCONTRACTOR SHALL OBTAIN AUTHORIZATION TO PROCEED WITH CONSTRUCTION PRIOR TO STARTING WORK ON ANY ITEM NOT CLEARLY DEFINED BY THE CONSTRUCTION DRAWINGS/CONTRACT DOCUMENTS.
7. THE SUBCONTRACTOR SHALL INSTALL ALL EQUIPMENT AND MATERIALS ACCORDING TO THE MANUFACTURER'S/VENDOR'S SPECIFICATIONS UNLESS INFORMED OTHERWISE OR WHERE LOCAL CODES OR ORDINANCES TAKE PRECEDENCE.
8. THE SUBCONTRACTOR SHALL PROVIDE A FULL SET OF CONSTRUCTION DOCUMENTS AT THE SITE, UPDATED WITH THE LATEST REVISIONS AND ADDENDUMS OR CLARIFICATIONS, AVAILABLE FOR THE USE BY ALL PERSONNEL INVOLVED WITH THE PROJECT.
9. THE SUBCONTRACTOR SHALL SUPERVISE AND DIRECT THE PROJECT DESCRIBED HEREIN. THE SUBCONTRACTOR SHALL BE SOLELY RESPONSIBLE FOR ALL THE CONSTRUCTION MEANS, METHODS, TECHNIQUES, SEQUENCES AND PROCEDURES AND FOR COORDINATING ALL PORTIONS OF THE WORK UNDER THE CONTRACT.
10. THE SUBCONTRACTOR SHALL BE RESPONSIBLE FOR OBTAINING ALL PERMITS AND INSPECTIONS WHICH MAY BE REQUIRED FOR THE WORK BY THE ARCHITECT/ENGINEERING, THE STATE, COUNTY OR LOCAL GOVERNMENT AUTHORITY.
11. THE SUBCONTRACTOR SHALL MAKE NECESSARY PROVISIONS TO PROTECT EXISTING IMPROVEMENTS, EASEMENTS, PAVEMENTS, CURBING, ETC. DURING CONSTRUCTION. UPON COMPLETION OF WORK, THE SUBCONTRACTOR SHALL REPAIR ANY DAMAGE THE MAY HAVE OCCURRED DUE TO CONSTRUCTION ON OR ABOUT THE PROPERTY.
12. THE SUBCONTRACTOR SHALL MAINTAIN THE GENERAL WORK AREA AS CLEAN AND HAZARD FREE DURING CONSTRUCTION AND DISPOSE OF ALL DIRT, DEBRIS, RUBBISH AND REMOVE EQUIPMENT NOT SPECIFIED AS REMAINING ON THE PROPERTY. PREMISES SHALL BE LEFT IN CLEAN CONDITION AND FREE FROM PAINT SPOTS, DUST OR SMUDGES OF ANY NATURE.
13. THE SUBCONTRACTOR SHALL COMPLY WITH ALL OSHA REQUIREMENTS AS THEY APPLY TO THIS PROJECT.
14. THE SUBCONTRACTOR SHALL NOTIFY THE AT&T REPRESENTATIVE WHERE A CONFLICT OCCURS ON ANY OF THE CONTRACT DOCUMENTS. THE SUBCONTRACTOR IS NOT TO ORDER MATERIAL OR CONSTRUCT ANY PORTION OF THE WORK THAT IS IN CONFLICT UNTIL CONFLICT IS RESOLVED BY THE AT&T REPRESENTATIVE.
15. THE SUBCONTRACTOR SHALL VERIFY ALL DIMENSIONS, ELEVATIONS, PROPERTY LINES, ETC. ON THE JOBS.
16. CABLE ATTACHMENT TO FOLLOW AT&T CONSTRUCTION STANDARDS DOCUMENT # ATT-CEM-18006 TITLED "HOSE CLAMP & METAL SNAP-IN SUPPORTS PIM PROBLEM RESOLUTION".

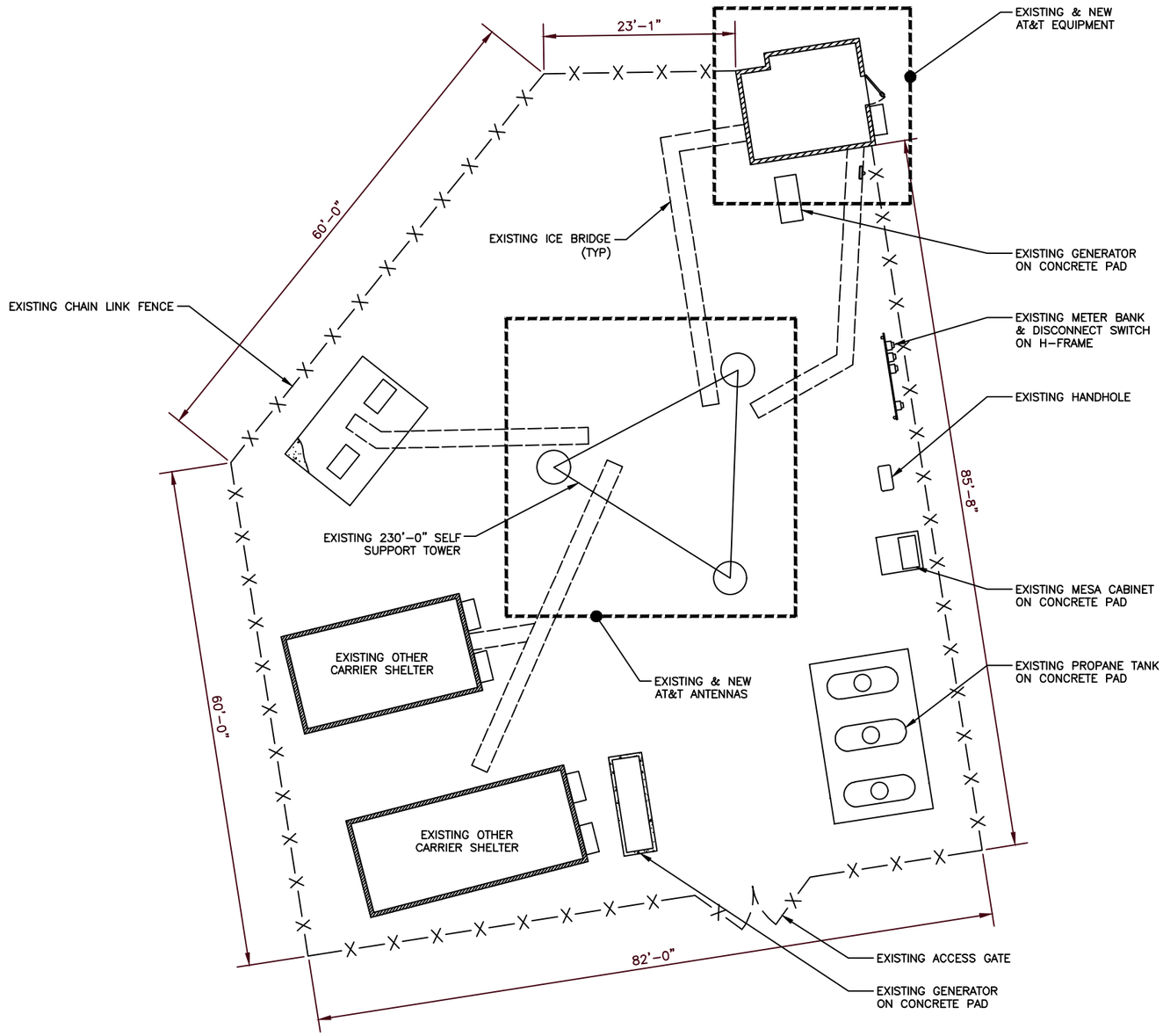

TRUE NORTH

AT&T

smartlink

Trylon

DRAWING SCALES ARE INTENDED FOR 11"x17" SIZE PRINTED MEDIA ONLY.

SUBMITTALS

REV	DATE	DESCRIPTION	BY
0	08/05/22	100% FCD	TFL
1	08/26/22	100% FCD	VP
2	03/30/23	100% FCD	TFL
3	04/11/23	100% FCD	RC
4	04/21/23	100% FCD	RC
5	05/05/23	100% FCD	RC

STATE OF MARYLAND
MATTHEW K. JAMISON
44680
PROFESSIONAL ENGINEER

PROFESSIONAL CERTIFICATE
I HEREBY CERTIFY THAT THESE DOCUMENTS WERE PREPARED OR APPROVED BY ME, AND THAT I AM A DULY LICENSED PROFESSIONAL ENGINEER UNDER THE LAWS OF THE STATE OF MARYLAND, LICENSE NO. 44680, EXPIRATION DATE 12/10/2023

PROJECT TITLE

USID: 3897
FA#: 10072516

RADNOR RD

5601 GOLDSBORO ROAD
BETHESDA, MD 20817

EXISTING SELF SUPPORT TOWER

SHEET DESCRIPTION

COMPOUND PLAN

SHEET NO.

C-1

COMPOUND PLAN

0 4' 8' 16'

SCALE: 1/16"=1'-0" (11x17)
(OR) 1/8"=1'-0" (22x34)

RF NOTE:

REFER TO RADIO FREQUENCY SAFETY SURVEY REPORT BY CENTERLINE COMMUNICATIONS DATED 04/28/2023 FOR MORE INFORMATION ON RF SIGNAGE & BARRIERS AT ROOF.

2. Site Scale Map

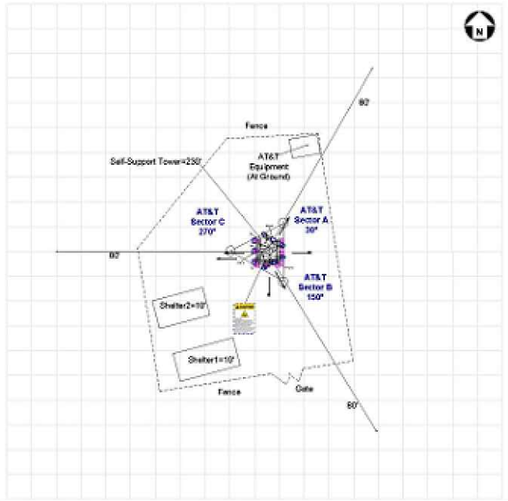

AT&T Antenna	Proposed	Proposed Signage										Map Scale = 10 ft
Panel	Barrier	Safety Instructions	Notice 2	Caution 2	Caution 2A	Caution 2B	Caution 2C	Caution 7"x7"	Warning 1B	RF Exposure Map	Lock	
OMNI	Posts											

AT&T Proprietary (Internal use Only). Not for use or disclosure outside the AT&T Companies, Except under written agreement. © 2023 AT&T Intellectual property. All rights Reserved.

Recommendations Map – Detailed View

Self-Support Tower

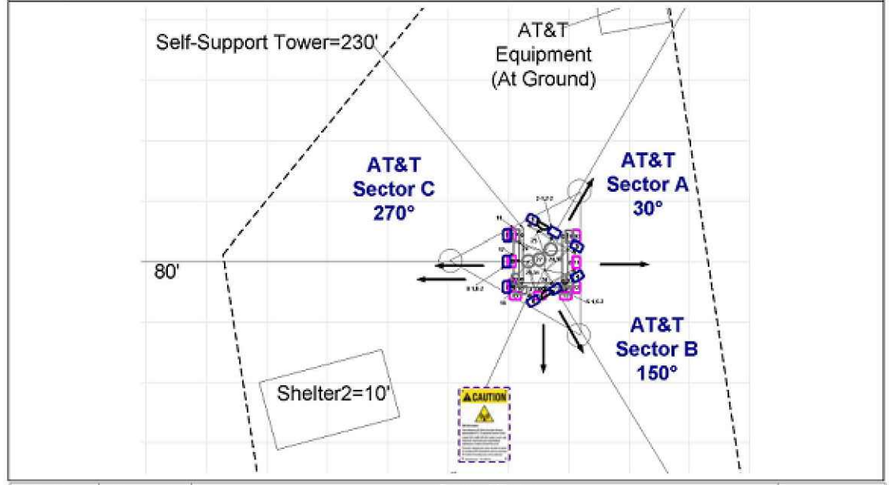

AT&T Antenna	Proposed	Proposed Signage										Map Scale = 10 ft
Panel	Barrier	Safety Instructions	Notice 2	Caution 2	Caution 2A	Caution 2B	Caution 2C	Caution 7"x7"	Warning 1B	RF Exposure Map	Lock	
OMNI	Posts											

AT&T Proprietary (Internal use Only). Not for use or disclosure outside the AT&T Companies, Except under written agreement. © 2023 AT&T Intellectual property. All rights Reserved.

Table 1: Limits for Maximum Permissible Exposure (MPE)

(A) Limits for Occupational/Controlled Exposure				
Frequency Range (MHz)	Electric Field Strength (E) (V/m)	Magnetic Field Strength (H) (A/m)	Power Density (S) (mW/cm^2)	Averaging Time $|E|^2$, $|H|^2$, or S (minutes)
0.3-3.0	614	1.63	(100)*	6
3.0-30	1842/f	4.89/f	($900/f^2$)*	6
30-300	61.4	0.163	1.0	6
300-1,500	--	--	f/300	6
1,500-100,000	--	--	5	6
(B) Limits for General Public/Uncontrolled Exposure				
Frequency Range (MHz)	Electric Field Strength (E) (V/m)	Magnetic Field Strength (H) (A/m)	Power Density (S) (mW/cm^2)	Averaging Time $|E|^2$, $|H|^2$, or S (minutes)
0.3-1.34	614	1.63	(100)*	30
1.34-30	824/f	2.19/f	($180/f^2$)*	30
30-300	27.5	0.073	0.2	30
300-1,500	--	--	f/1,500	30
1,500-100,000	--	--	1.0	30

AT&T Proprietary (Internal use Only). Not for use or disclosure outside the AT&T Companies, Except under written agreement. © 2023 AT&T Intellectual property. All rights Reserved.

Appendix D – General Safety Recommendations

The following are general recommendations appropriate for any site with accessible areas in excess of 100% General Public MPE. These recommendations are not specific to this site. These are safety recommendations appropriate for typical site management, building management, and other tenant operations.

1. All individuals needing access to the main site should be instructed to read and obey all posted placards and signs.

2. The site should be routinely inspected and this or similar report updated with the addition of any antennas or upon any changes to the RF environment including:

- *adding new antennas that may have been located on the site*
- *removing of any existing antennas*
- *changes in the radiating power or number of RF emitters*

3. Post the appropriate SAFETY INSTRUCTIONS, NOTICE, CAUTION & WARNING sign at the main site access point(s) and other locations as required. Note: Please refer to RF Exposure Diagrams in the report section above, to inform everyone who has access to this site that beyond posted signs there may be levels in excess of the limits prescribed by the FCC. The signs below are examples of signs meeting FCC guidelines.



4. Ensure that the site door remains locked (or appropriately controlled) to deny access to the general public if deemed as policy by the building/site owner.

5. For a General Public environment the five color levels identified in measured RF emission diagram can be interpreted in the following manner:

- *White represents areas predicted to be greater than or equal to 0% and less than 1% of the MPE general public limits*
- *Green represents areas predicted to be greater than or equal to 1% and less than 100% of the MPE general public limits*
- *Blue represents areas predicted to be greater than or equal to 100% and lesser than 500% of the MPE general public limits.*
- *Yellow represents areas predicted to be greater than or equal to 500% and lesser than 5000% of the MPE general public limits.*
- *Red areas indicates predicted levels greater than or equal to 5000% of the MPE general public limits.*

AT&T Proprietary (Internal use Only). Not for use or disclosure outside the AT&T Companies, Except under written agreement. © 2023 AT&T Intellectual property. All rights Reserved.

AT&T

smartlink

Trylon

DRAWING SCALES ARE INTENDED FOR 11"x17" SIZE PRINTED MEDIA ONLY.

SUBMITTALS

REV	DATE	DESCRIPTION	BY
0	08/05/22	100% FCD	TFL
1	08/26/22	100% FCD	VP
2	03/30/23	100% FCD	TFL
3	04/11/23	100% FCD	RC
4	04/21/23	100% FCD	RC
5	05/05/23	100% FCD	RC

STATE OF MARYLAND
MATTHEW K. JAMESON
44680
PROFESSIONAL ENGINEER

PROFESSIONAL CERTIFICATE
I HEREBY CERTIFY THAT THESE DOCUMENTS WERE PREPARED OR APPROVED BY ME, AND THAT I AM A DULY LICENSED PROFESSIONAL ENGINEER UNDER THE LAWS OF THE STATE OF MARYLAND, LICENSE NO. 44680, EXPIRATION DATE 12/10/2023

PROJECT TITLE

USID: 3897
FA#: 10072516

RADNOR RD

5601 GOLDSBORO ROAD
BETHESDA, MD 20817

EXISTING SELF SUPPORT TOWER

SHEET DESCRIPTION

RF SAFETY SURVEY REPORT

SHEET NO.

C-1.1

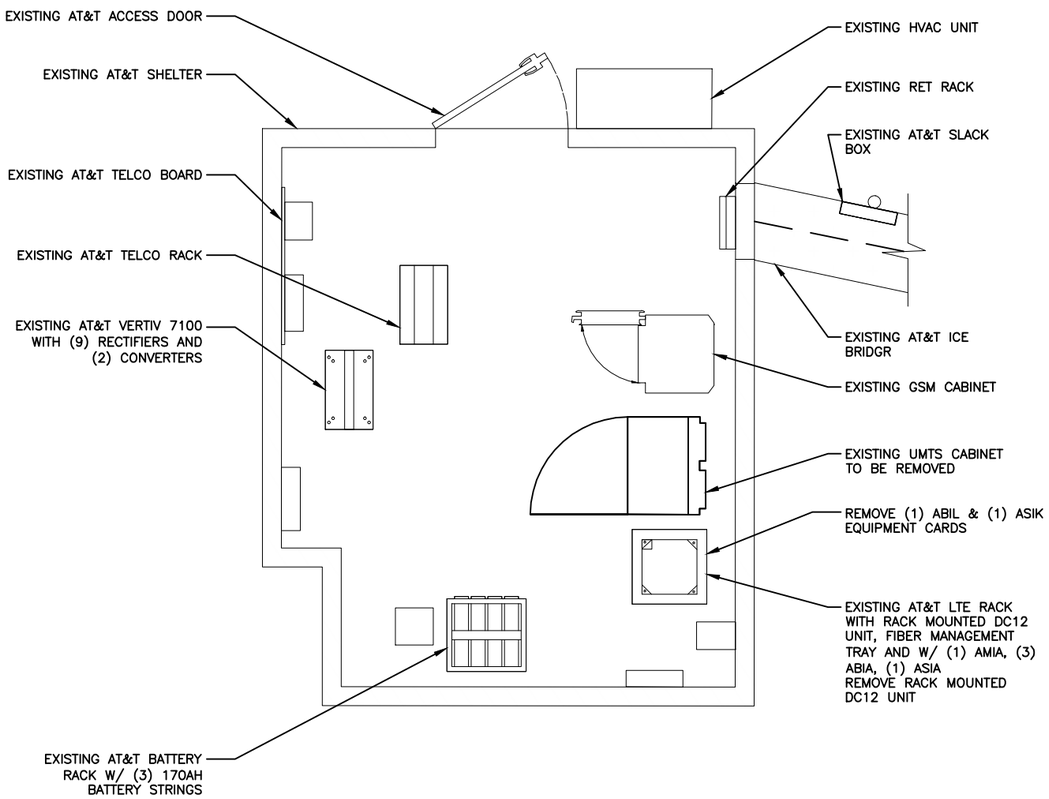

EXISTING EQUIPMENT LAYOUT

0 2' 4'

SCALE: 1/4"=1'-0" (11x17)
(OR) 1/2"=1'-0" (22x34)

1

NOTES:

PLEASE REFER TO ATT STD DOC ID ATT-002-290-531

PLEASE REFER TO ATT STD DOC ID ATT-002-290-701

PLEASE REFER TO ATT STD DOC ID ATT-TP-76300

PLEASE REFER TO ATT STD DOC ID ATT-CEM-18002

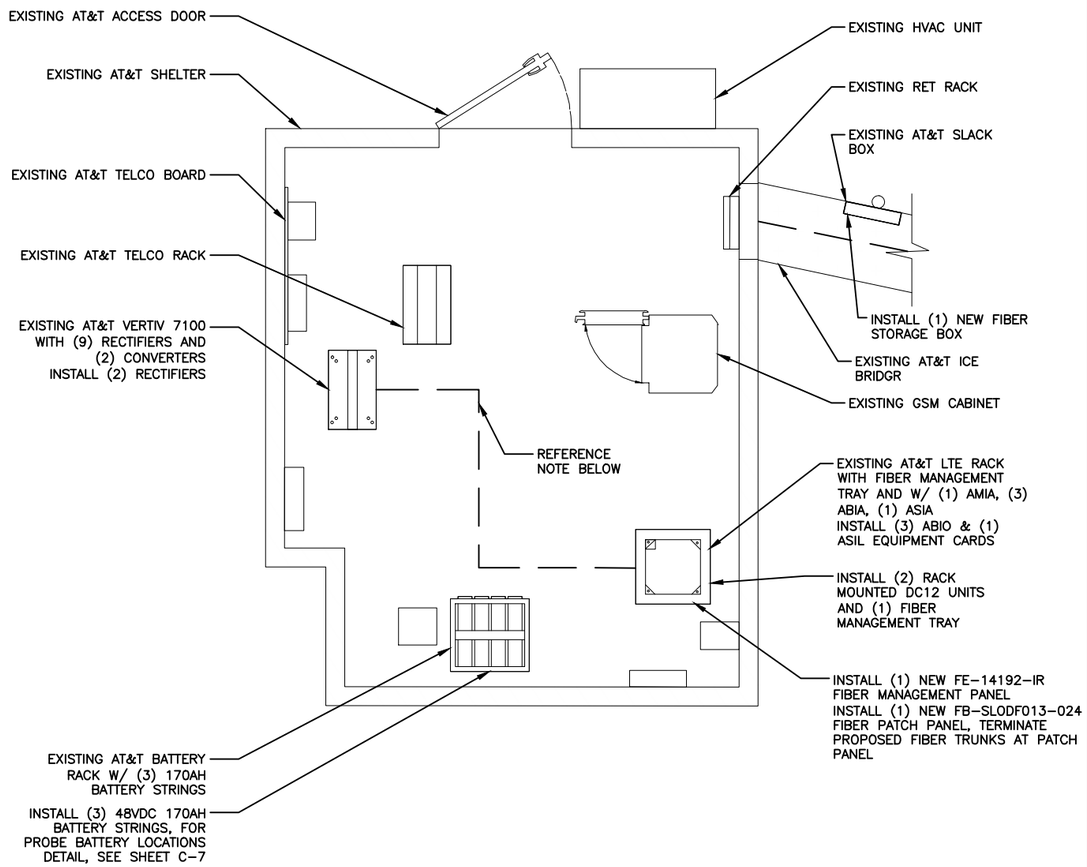

NOTE:

1. INSTALL (24) "12 FEEDS 12 RETURNS" 8AWG MINIMUM TELCOFLEX II FROM POWER PLANT TO NEW DC12 UNIT TO BE RUN IN THE CABLE LADDER ABOVE WITH FISHPAPER AND WAX STRING PER NEW DC12 UNIT

PROPOSED EQUIPMENT LAYOUT

0 2' 4'

SCALE: 1/4"=1'-0" (11x17)
(OR) 1/2"=1'-0" (22x34)

2

AT&T

smartlink

Trylon

DRAWING SCALES ARE INTENDED FOR 11"x17" SIZE PRINTED MEDIA ONLY.

SUBMITTALS

REV	DATE	DESCRIPTION	BY
0	08/05/22	100% FCD	TFL
1	08/26/22	100% FCD	VP
2	03/30/23	100% FCD	TFL
3	04/11/23	100% FCD	RC
4	04/21/23	100% FCD	RC
5	05/05/23	100% FCD	RC

STATE OF MARYLAND
MATTHEW K. JAMERSON
44680
PROFESSIONAL ENGINEER

PROFESSIONAL CERTIFICATE

I HEREBY CERTIFY THAT THESE DOCUMENTS WERE PREPARED OR APPROVED BY ME, AND THAT I AM A DULY LICENSED PROFESSIONAL ENGINEER UNDER THE LAWS OF THE STATE OF MARYLAND, LICENSE NO. 44680, EXPIRATION DATE 12/10/2023

PROJECT TITLE

USID: 3897
FA#: 10072516

RADNOR RD

5601 GOLDSBORO ROAD
BETHESDA, MD 20817

EXISTING SELF SUPPORT TOWER

SHEET DESCRIPTION

EQUIPMENT PLAN

SHEET NO.

C-2

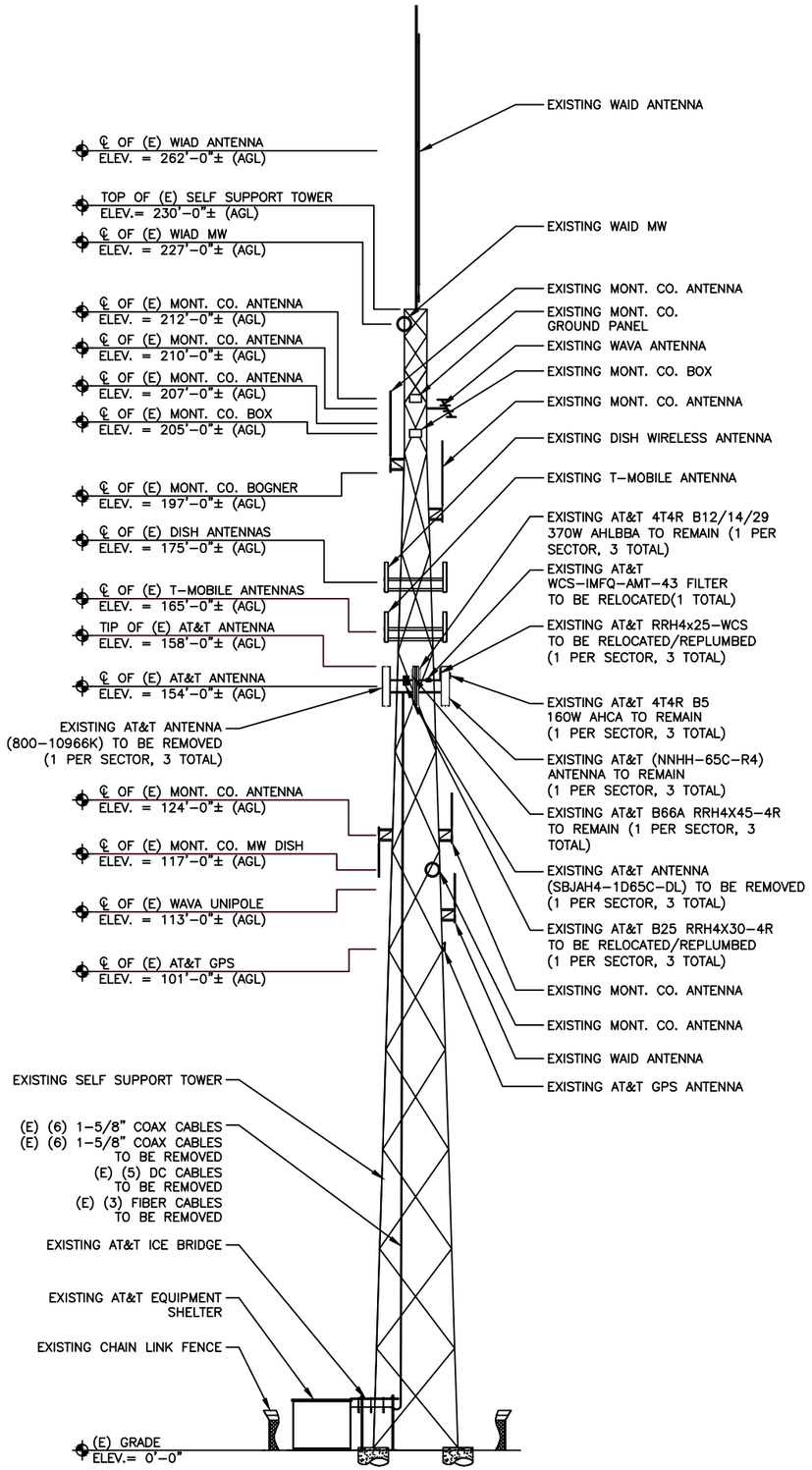

EXISTING TOWER ELEVATION-NORTH

0 15' 30'

SCALE: 1"=30'-0" (11x17)
(OR) 2"=30'-0" (22x34)

1

NOTES:

CONTRACTOR TO REFER TO PASSING MOUNT ANALYSIS REPORT PREPARED BY TRYLON DATED 04/30/2022

CONTRACTOR TO REFER TO PASSING STRUCTURAL ANALYSIS REPORT PREPARED BY TRYLON DATED 04/04/2023

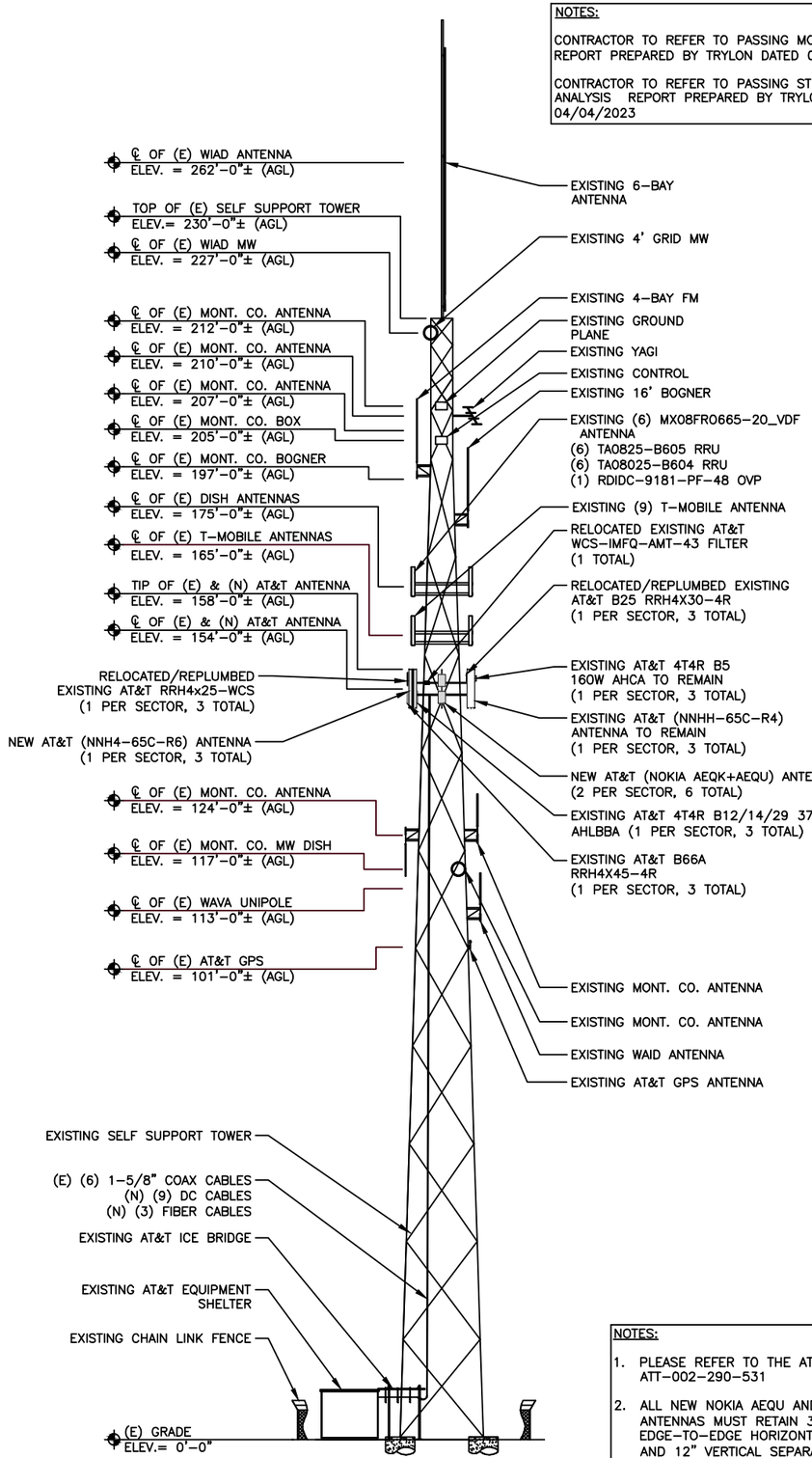

NOTES:

1. PLEASE REFER TO THE ATT STD DOC ID ATT-002-290-531
2. ALL NEW NOKIA AEQU AND AEQK STACKED ANTENNAS MUST RETAIN 3'-0" EDGE-TO-EDGE HORIZONTAL CLEARANCE AND 12" VERTICAL SEPARATION BETWEEN ANTENNAS

PROPOSED TOWER ELEVATION-NORTH

0 15' 30'

SCALE: 1"=30'-0" (11x17)
(OR) 2"=30'-0" (22x34)

2

AT&T

smartlink

Trylon

DRAWING SCALES ARE INTENDED FOR 11"x17" SIZE PRINTED MEDIA ONLY.

SUBMITTALS

REV	DATE	DESCRIPTION	BY
0	08/05/22	100% FCD	TFL
1	08/26/22	100% FCD	VP
2	03/30/23	100% FCD	TFL
3	04/11/23	100% FCD	RC
4	04/21/23	100% FCD	RC
5	05/05/23	100% FCD	RC

STATE OF MARYLAND
MATTHEW K. JAMISON
44680
PROFESSIONAL ENGINEER

PROFESSIONAL CERTIFICATE

I HEREBY CERTIFY THAT THESE DOCUMENTS WERE PREPARED OR APPROVED BY ME, AND THAT I AM A DULY LICENSED PROFESSIONAL ENGINEER UNDER THE LAWS OF THE STATE OF MARYLAND, LICENSE NO. 44680, EXPIRATION DATE 12/10/2023

PROJECT TITLE

USID: 3897
FA#: 10072516

RADNOR RD

5601 GOLDSBORO ROAD
BETHESDA, MD 20817

EXISTING SELF SUPPORT TOWER

SHEET DESCRIPTION

TOWER ELEVATION

SHEET NO.

C-3

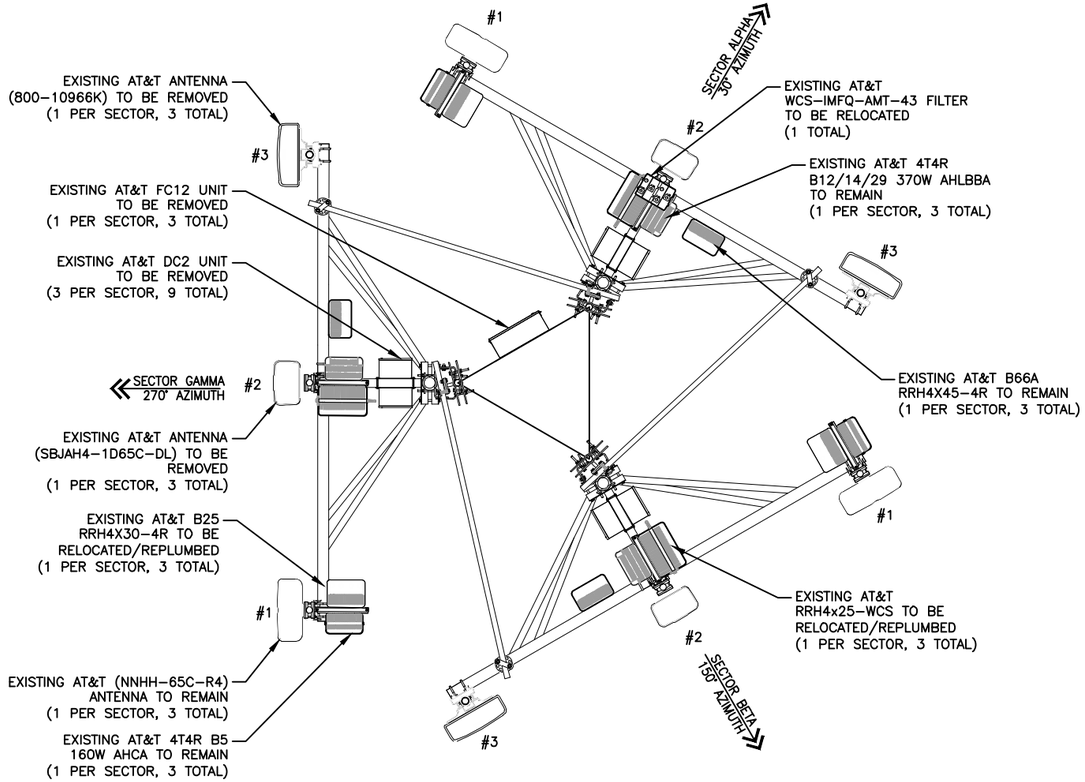

EXISTING ANTENNA LAYOUT

0 2' 4'

SCALE: 1/4"=1'-0" (11x17)
(OR) 1/2"=1'-0" (22x34)

1

NOTES:

CONTRACTOR TO REFER TO PASSING MOUNT ANALYSIS REPORT PREPARED BY TRYLON DATED 04/30/2022

CONTRACTOR TO REFER TO PASSING STRUCTURAL ANALYSIS REPORT PREPARED BY TRYLON DATED 04/04/2023

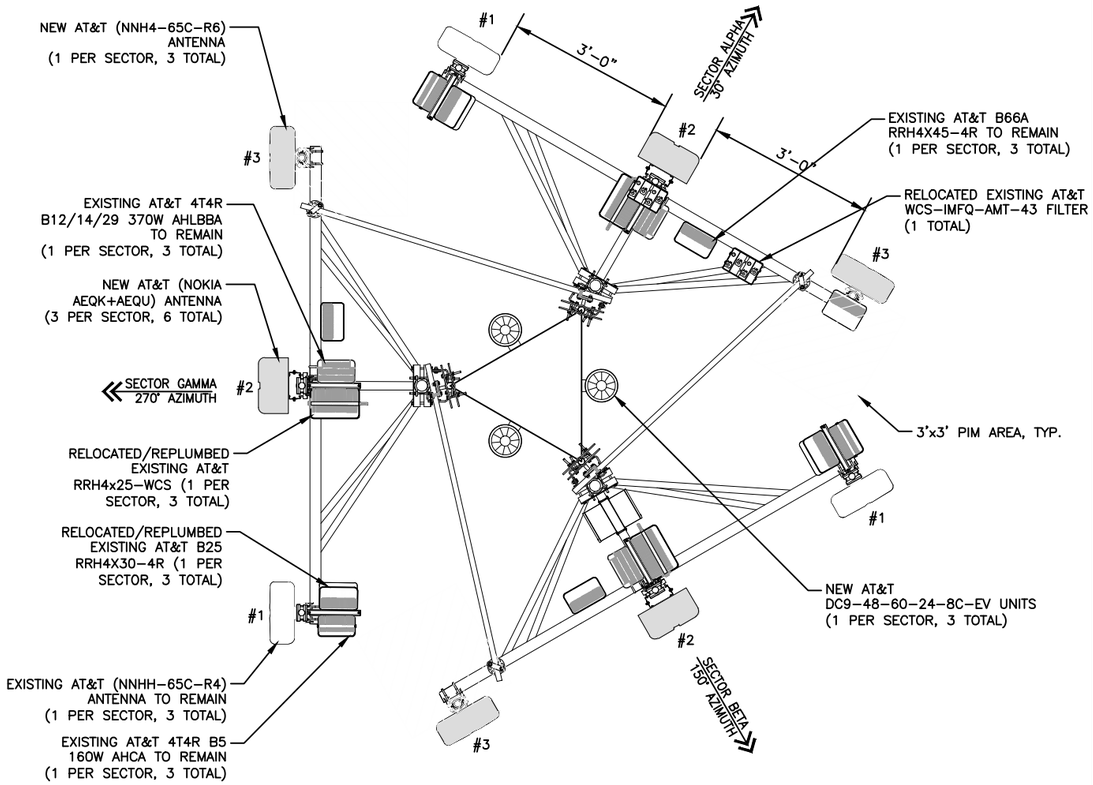

NOTES:

1. PLEASE REFER TO THE ATT STD DOC ID ATT-002-290-531
2. ALL NEW NOKIA AEQU AND AEQK STACKED ANTENNAS MUST RETAIN 3'-0" EDGE-TO-EDGE HORIZONTAL CLEARANCE AND 12" VERTICAL SEPARATION BETWEEN ANTENNAS

PROPOSED ANTENNA LAYOUT

0 2' 4'

SCALE: 1/4"=1'-0" (11x17)
(OR) 1/2"=1'-0" (22x34)

2

AT&T

smartlink

Trylon

DRAWING SCALES ARE INTENDED FOR 11"x17" SIZE PRINTED MEDIA ONLY.

SUBMITTALS

REV	DATE	DESCRIPTION	BY
0	08/05/22	100% FCD	TFL
1	08/26/22	100% FCD	VP
2	03/30/23	100% FCD	TFL
3	04/11/23	100% FCD	RC
4	04/21/23	100% FCD	RC
5	05/05/23	100% FCD	RC

STATE OF MARYLAND
MATTHEW K. JAMERSON
44680
PROFESSIONAL ENGINEER

PROFESSIONAL CERTIFICATE

I HEREBY CERTIFY THAT THESE DOCUMENTS WERE PREPARED OR APPROVED BY ME, AND THAT I AM A DULY LICENSED PROFESSIONAL ENGINEER UNDER THE LAWS OF THE STATE OF MARYLAND, LICENSE NO. 44680, EXPIRATION DATE 12/10/2023

PROJECT TITLE

USID: 3897
FA#: 10072516

RADNOR RD

5601 GOLDSBORO ROAD
BETHESDA, MD 20817

EXISTING SELF SUPPORT TOWER

SHEET DESCRIPTION

ANTENNA LAYOUTS

SHEET NO.

C-4

RFDS ID: 4469754

PROPOSED ANTENNA SCHEDULE

SECTOR	ANTENNA POSITION	ANTENNA MAKE/MODEL	RAD CENTER	AZIMUTH	EQUIPMENT MAKE/MODEL	SQUID	FEEDLINE LENGTH	FEEDLINE
ALPHA	#1	(E) COMMSCOPE NNHH-65C-R4	154'-0"	30°	AIRSCALE RRH 4T4R B5 160W AHCA B25 RRH4X30-4R	(1) (N) DC9-48-60-24 -8C-EV UNITS	180'-0"	(2) 1-5/8" COAX FEEDERS (3) PWRT-606-S DC TRUNKS (1) RFFT-48SM-001 FIBER TRUNK
	#2	(N) NOKIA AEQU+ AEQK STACKED	155'-9" 152'-3"	30°	INTEGRATED			
	#3	(N) COMMSCOPE NNH4-65C-R6	154'-0"	30°	AIRSCALE TRI RRH 4T4R B12/14/29 370W AHLBBA B66A RRH4X45-4R RRH4x25-WCS-4R (1) WCS-IMFQ-AMT-43 FILTER			
BETA	#1	(E) COMMSCOPE NNHH-65C-R4	154'-0"	150°	AIRSCALE RRH 4T4R B5 160W AHCA B25 RRH4X30-4R	(1) (N) DC9-48-60-24 -8C-EV UNITS	180'-0"	(2) 1-5/8" COAX FEEDERS (3) PWRT-606-S DC TRUNKS (1) RFFT-48SM-001 FIBER TRUNK
	#2	(N) NOKIA AEQU+ AEQK STACKED	155'-9" 152'-3"	150°	INTEGRATED			
	#3	(N) COMMSCOPE NNH4-65C-R6	154'-0"	150°	AIRSCALE TRI RRH 4T4R B12/14/29 370W AHLBBA B66A RRH4X45-4R RRH4x25-WCS-4R			
GAMMA	#1	(E) COMMSCOPE NNHH-65C-R4	154'-0"	270°	AIRSCALE RRH 4T4R B5 160W AHCA B25 RRH4X30-4R	(1) (N) DC9-48-60-24 -8C-EV UNITS	180'-0"	(2) 1-5/8" COAX FEEDERS (3) PWRT-606-S DC TRUNKS (1) RFFT-48SM-001 FIBER TRUNK
	#2	(N) NOKIA AEQU+ AEQK STACKED	155'-9" 152'-3"	270°	INTEGRATED			
	#3	(N) COMMSCOPE NNH4-65C-R6	154'-0"	270°	AIRSCALE TRI RRH 4T4R B12/14/29 370W AHLBBA B66A RRH4X45-4R RRH4x25-WCS-4R			

NOTE:
ADD SECOND CPRI CARD AND SECOND FIBER PAIR TO ALL EXISTING AND PROPOSED 5G CAPABLE RRH'S AS OUTLINED IN SECTION 9 FINAL OF THE RFDS

AT&T

smartlink

Trylon

DRAWING SCALES ARE INTENDED FOR 11"x17" SIZE PRINTED MEDIA ONLY.

SUBMITTALS

REV	DATE	DESCRIPTION	BY
0	08/05/22	100% FCD	TFL
1	08/26/22	100% FCD	VP
2	03/30/23	100% FCD	TFL
3	04/11/23	100% FCD	RC
4	04/21/23	100% FCD	RC
5	05/05/23	100% FCD	RC

STATE OF MARYLAND
MATTHEW K. JAMERSON
44680
PROFESSIONAL ENGINEER

PROFESSIONAL CERTIFICATE
I HEREBY CERTIFY THAT THESE DOCUMENTS WERE PREPARED OR APPROVED BY ME, AND THAT I AM A DULY LICENSED PROFESSIONAL ENGINEER UNDER THE LAWS OF THE STATE OF MARYLAND, LICENSE NO. 44680, EXPIRATION DATE 12/10/2023

PROJECT TITLE

USID: 3897
FA#: 10072516

RADNOR RD

5601 GOLDSBORO ROAD
BETHESDA, MD 20817

EXISTING SELF SUPPORT TOWER

SHEET DESCRIPTION

PROPOSED ANTENNA SCHEDULE

SHEET NO.

C-4.1

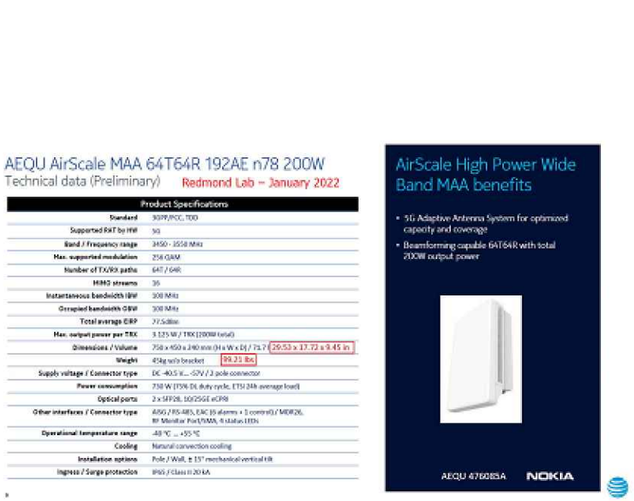

1 C-5 PROPOSED AEQU ANTENNA DETAIL
SCALE: NTS



2 C-5 PROPOSED AEQK ANTENNA DETAIL
SCALE: NTS

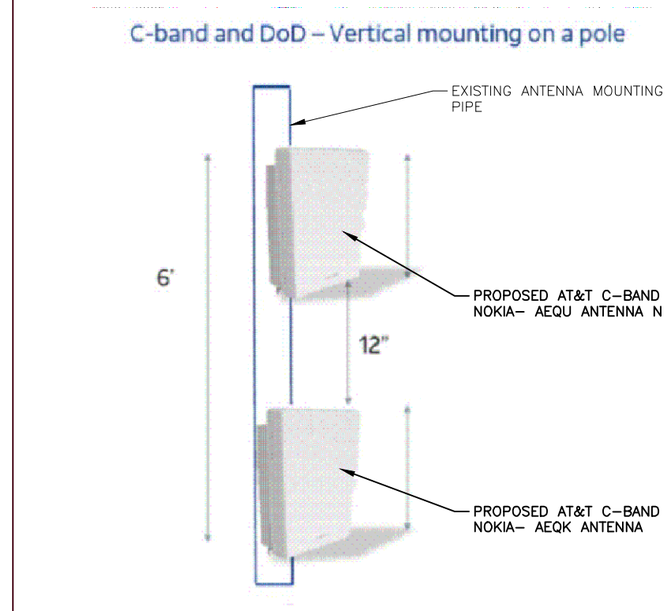

3 C-5 ANTENNA MOUNTING DETAIL
SCALE: NTS

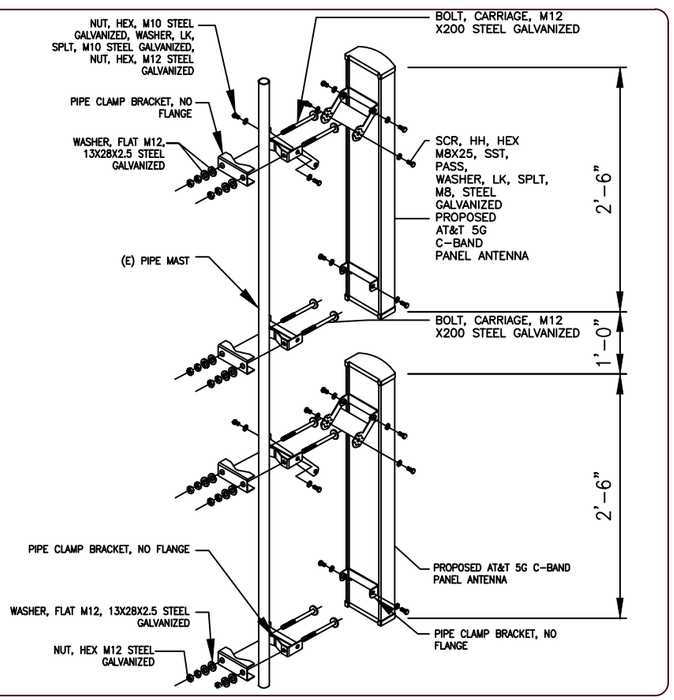

4 C-5 PROPOSED ANTENNA MOUNTING DETAIL
SCALE: NTS

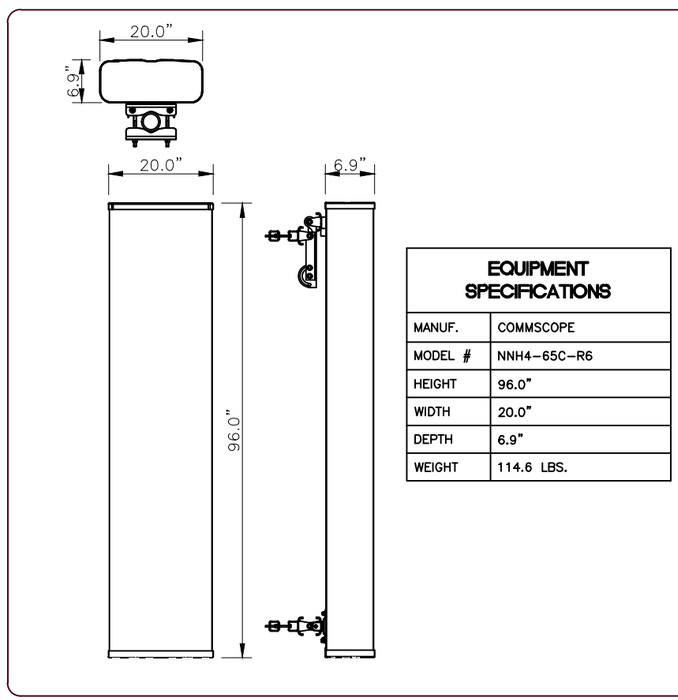

EQUIPMENT SPECIFICATIONS	
MANUF.	COMMSCOPE
MODEL #	NNH4-65C-R6
HEIGHT	96.0"
WIDTH	20.0"
DEPTH	6.9"
WEIGHT	114.6 LBS.

5 C-5 PROPOSED NNH4-65C-R6 ANTENNA DETAIL
SCALE: NTS

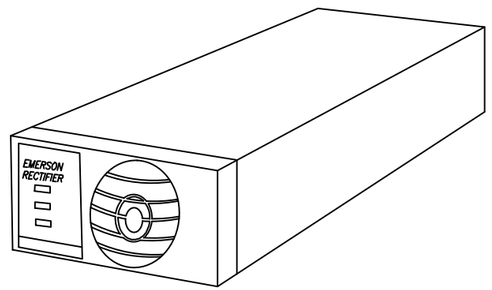

NEQ.15930 1R482000E3
RECTIFIER, NETSURE™ 512 & 721, HIGH EFFICIENCY,
–48 VDC, 40 A/2000 W, 120/208/240 VAC,
SINGLE-PHASE INPUT, 4.4 LBS.

6 C-5 EMERSON NEQ.15930 RECTIFIER DETAIL
SCALE: NTS

AT&T
smartlink
Trylon

DRAWING SCALES ARE INTENDED FOR 11"x17" SIZE PRINTED MEDIA ONLY.

SUBMITTALS

REV	DATE	DESCRIPTION	BY
0	08/05/22	100% FCD	TFL
1	08/26/22	100% FCD	VP
2	03/30/23	100% FCD	TFL
3	04/11/23	100% FCD	RC
4	04/21/23	100% FCD	RC
5	05/05/23	100% FCD	RC



PROFESSIONAL CERTIFICATE
I HEREBY CERTIFY THAT THESE DOCUMENTS WERE PREPARED OR APPROVED BY ME, AND THAT I AM A DULY LICENSED PROFESSIONAL ENGINEER UNDER THE LAWS OF THE STATE OF MARYLAND, LICENSE NO. 44680, EXPIRATION DATE 12/10/2023

PROJECT TITLE

USID: 3897
FA#: 10072516

RADNOR RD

5601 GOLDSBORO ROAD
BETHESDA, MD 20817

EXISTING SELF SUPPORT TOWER

SHEET DESCRIPTION

EQUIPMENT DETAILS

SHEET NO.

C-5

RAYCAP DC12-48-60-RM

DIMENSIONS, WxDxH:	483x89x392mm (19.0"x3.5"x15.4")
NOMINAL OPERATING VOLTAGE:	48 VDC
NOMINAL DISCHARGE CURRENT:	20 kA 8/20µs
MAXIMUM DISCHARGE CURRENT:	60 kA 8/20µs
MAXIMUM CONTINUOUS OPERATING VOLTAGE:	75 VDC
VOLTAGE PROTECTION RATING:	400 V
TOTAL WEIGHT:	27 lbs

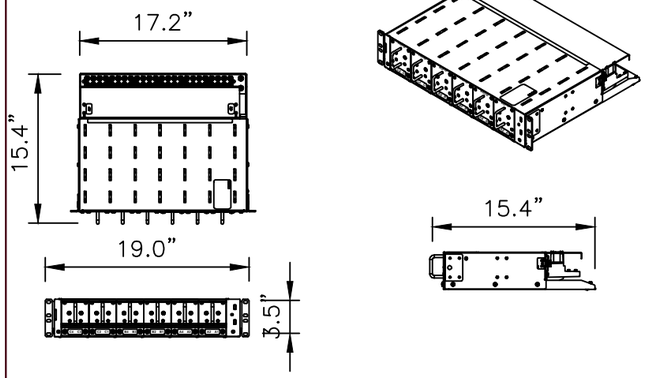

1 / C-6 RACK MOUNTED DC12 UNIT
SCALE: NTS

24" FMB – ICE BRIDGE POST

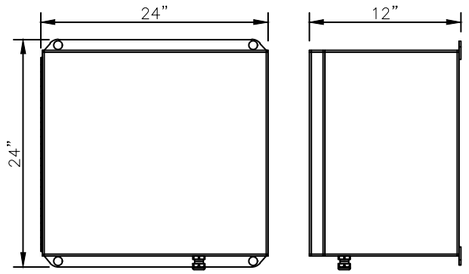

2 / C-6 FIBER STORAGE BOX DETAIL
SCALE: NTS

3 / C-6 NOT USED
SCALE: NTS

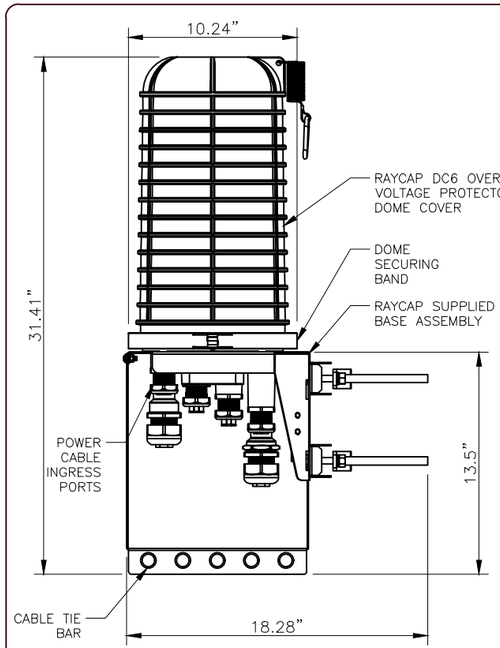

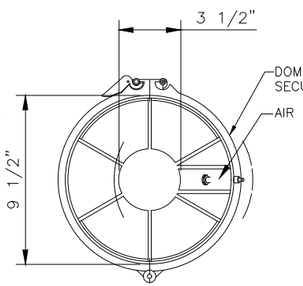

TOP VIEW

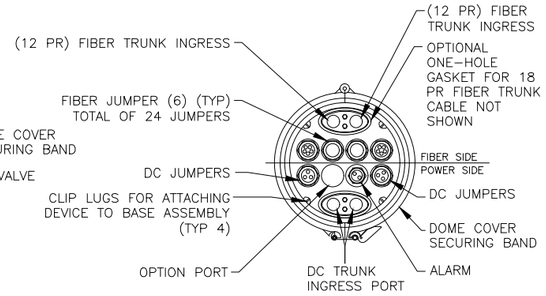

BOTTOM VIEW
DC9-48-60-24-8C-EV

RAYCAP DC6 (SQUID)	
LENGTH (H)	18.28"
WIDTH (W)	10.24"
HEIGHT (D)	31.4"
WEIGHT:	
SYSTEM	16.0 LBS
MOUNT	10.2 LBS
TOTAL:	26.2 LBS

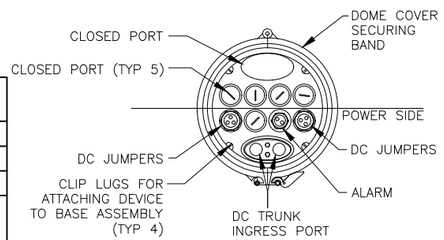

BOTTOM VIEW
DC9-48-60-24-8C-EV

4 / C-6 RAYCAP DC9-48-60-24-8C-EV SQUID DETAILS
SCALE: NTS

5 / C-6 NOT USED
SCALE: NTS

AT&T
smartlink
Trylon

DRAWING SCALES ARE INTENDED FOR 11"x17" SIZE PRINTED MEDIA ONLY.

SUBMITTALS

REV	DATE	DESCRIPTION	BY
0	08/05/22	100% FCD	TFL
1	08/26/22	100% FCD	VP
2	03/30/23	100% FCD	TFL
3	04/11/23	100% FCD	RC
4	04/21/23	100% FCD	RC
5	05/05/23	100% FCD	RC

STATE OF MARYLAND
MATTHEW K. JAMERSON
44680
PROFESSIONAL ENGINEER

PROFESSIONAL CERTIFICATE
I HEREBY CERTIFY THAT THESE DOCUMENTS WERE PREPARED OR APPROVED BY ME, AND THAT I AM A DULY LICENSED PROFESSIONAL ENGINEER UNDER THE LAWS OF THE STATE OF MARYLAND, LICENSE NO. 44680, EXPIRATION DATE 12/10/2023

PROJECT TITLE

USID: 3897
FA#: 10072516

RADNOR RD

5601 GOLDSBORO ROAD
BETHESDA, MD 20817

EXISTING SELF SUPPORT TOWER

SHEET DESCRIPTION

EQUIPMENT DETAILS

SHEET NO.

C-6



Chemistry:	Sealed Lead Acid
Nominal Voltage:	12v
Nominal Capacity:	170.0Ah
Terminals:	M6
Dimensions (L x W x H):	22.10 x 4.90 x 11.10
Weight (pounds):	115.7

1 C–7 170AH BATTERY DETAIL
SCALE: NTS

APPC AirScale 2 55 A DC plug 10-16 mm² (7-6 AWG, 8 AWG with crimp ferrule) - 474283A

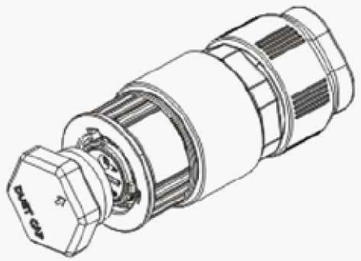

Overview

AirScale 2 55 A DC plug 10-16 mm² (7-6 AWG, 8 AWG with crimp ferrule, 474283A) is a part of the DC-feed cable of AirScale 2 RRH.

2 C–7 NOKIA FERRULE DETAIL
SCALE: NTS

Technical Data Sheet	Rosenberger Site Solutions, LLC
FO Patchpanel 19" 1HU 24LCD	FB-SLODF013-024

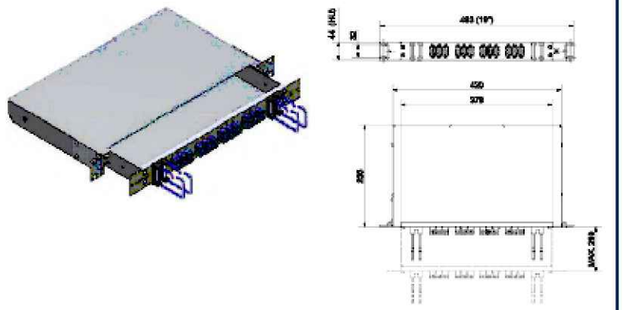

All dimensions are in mm; tolerances according to ISO 2768 m-H

3 C–7 ROSENBERGER FB–SLODF013–024 FIBER PATCH PANEL
SCALE: NTS

FE-14192-IR



HELIAX® Universal Fiber Management Panel

Dimensions

Height	44.45 mm | 1.75 in
Width	482.6 mm | 19 in
Depth	355.6 mm | 14 in

Product Classification

Regional Availability	Asia | Australia/New Zealand | EMEA | Latin America | North America
Portfolio	CommScope®
Product Type	Fiber storage panel
Product Brand	HELIAX®

4 C–7 COMMSCOPE FE–14192–IR FIBER MANAGEMENT PANEL
SCALE: NTS

INDOOR VERTIV 7100 DC PP BATTERY PROBE LOCATIONS

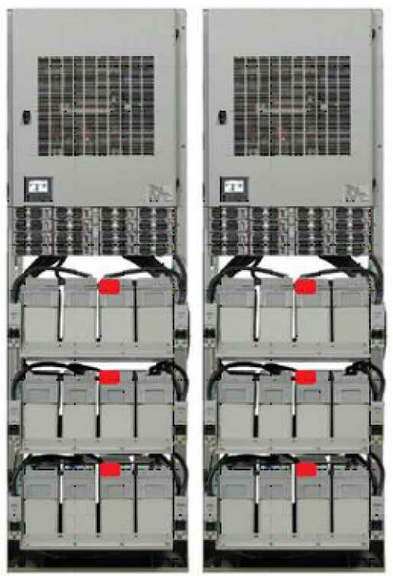

5 C–7 BATTERY PROBE LOCATIONS DETAIL
SCALE: NTS

AT&T

smartlink

Trylon

DRAWING SCALES ARE INTENDED FOR 11"x17" SIZE PRINTED MEDIA ONLY.

SUBMITTALS

REV	DATE	DESCRIPTION	BY
0	08/05/22	100% FCD	TFL
1	08/26/22	100% FCD	VP
2	03/30/23	100% FCD	TFL
3	04/11/23	100% FCD	RC
4	04/21/23	100% FCD	RC
5	05/05/23	100% FCD	RC

STATE OF MARYLAND
MATTHEW K. JAMERSON
44680
PROFESSIONAL ENGINEER

PROFESSIONAL CERTIFICATE
I HEREBY CERTIFY THAT THESE DOCUMENTS WERE PREPARED OR APPROVED BY ME, AND THAT I AM A DULY LICENSED PROFESSIONAL ENGINEER UNDER THE LAWS OF THE STATE OF MARYLAND, LICENSE NO. 44680, EXPIRATION DATE 12/10/2023

PROJECT TITLE

USID: 3897
FA#: 10072516

RADNOR RD

5601 GOLDSBORO ROAD
BETHESDA, MD 20817

EXISTING SELF SUPPORT TOWER

SHEET DESCRIPTION

EQUIPMENT DETAILS

SHEET NO.

C–7

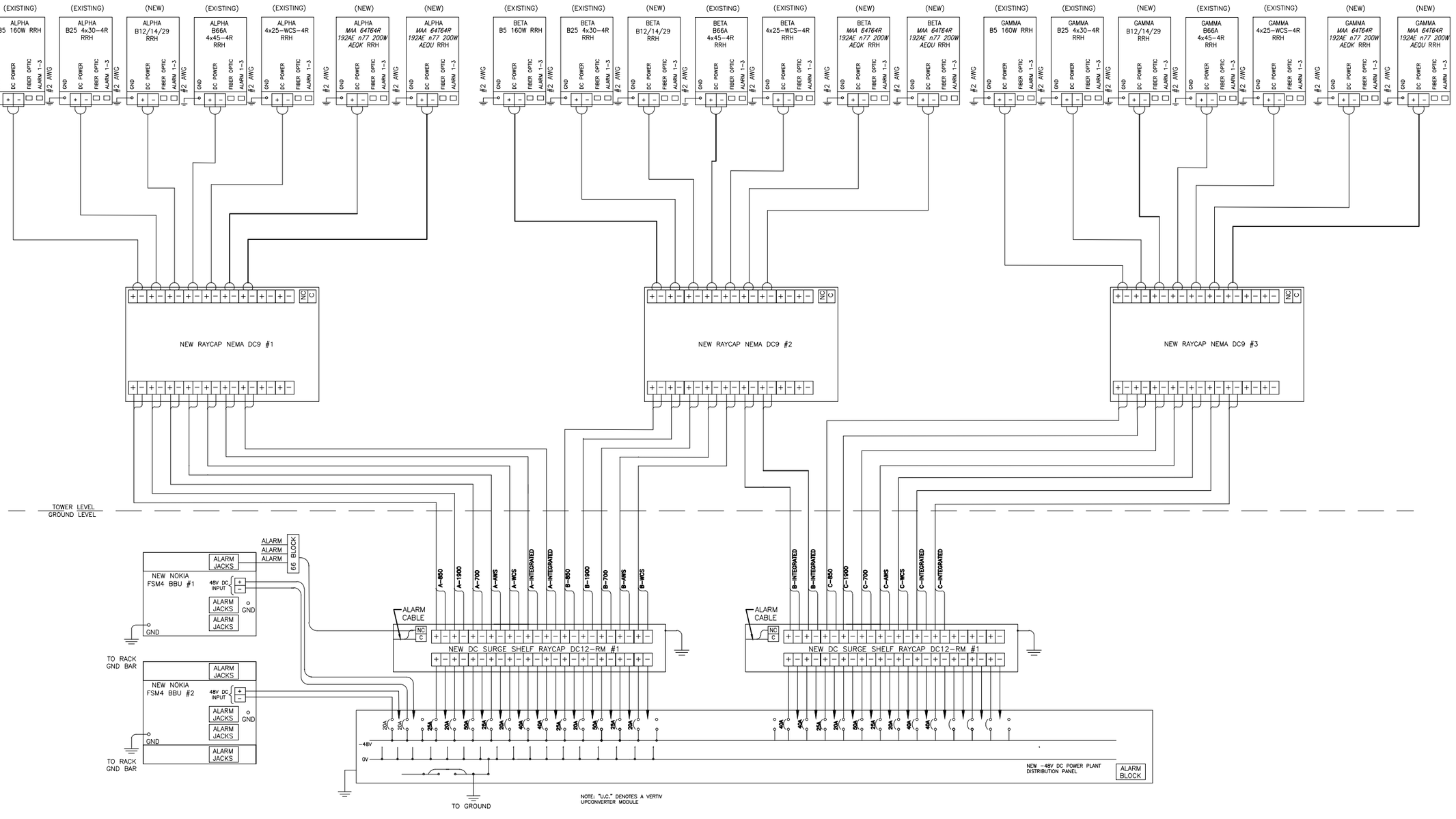

AT&T

smartlink

Trylon

DRAWING SCALES ARE INTENDED FOR 11"x17" SIZE PRINTED MEDIA ONLY.

SUBMITTALS

REV	DATE	DESCRIPTION	BY
0	08/05/22	100% FCD	TFL
1	08/26/22	100% FCD	VP
2	03/30/23	100% FCD	TFL
3	04/11/23	100% FCD	RC
4	04/21/23	100% FCD	RC
5	05/05/23	100% FCD	RC

STATE OF MARYLAND
MATTHEW K. JAMESON
44680
PROFESSIONAL ENGINEER

PROFESSIONAL CERTIFICATE
I HEREBY CERTIFY THAT THESE DOCUMENTS WERE PREPARED OR APPROVED BY ME, AND THAT I AM A DULY LICENSED PROFESSIONAL ENGINEER UNDER THE LAWS OF THE STATE OF MARYLAND, LICENSE NO. 44680, EXPIRATION DATE 12/10/2023

PROJECT TITLE

USID: 3897
FA#: 10072516

RADNOR RD

5601 GOLDSBORO ROAD
BETHESDA, MD 20817

EXISTING SELF SUPPORT TOWER

SHEET DESCRIPTION

DC SURGE SUPPRESSION WIRING DIAGRAM

SHEET NO.

E-1

PANEL SCHEDULE

Information:

	Panel: 10072516 RADNOR RD
SQUARE D NQOD D206Q22 N	Fed From: METER/ DEDD METROT
200 BRKR	NMD Rating:
120/240Vg 1PH 3W	RATED KVA: 43
200A BUS	Panel Type: MEGA 1 / 200% NEUTRAL

WIRE FEED

Description	Amps	TYPE	Gauge	Note
Phase	200	CU		
Neutral	200	CU		
EGC		CU		

CKT TYPE	Type	MAIN BREAKER RATING (A):				200			SYSTEM VOLTAGE (V):		240		Type	CKT TYPE
		DESCRIPTION	VA	AMPS	EXP	POSN	L1	L2	POSN	EXP	VA	AMPS	DESCRIPTION		
RCPT	1-P	RCPT	180	1.5	20	1	1020		2	20	540	7.0	LGHTS	1-P	LTHG
CUSTOM 2	1-P	SMOKE DETECTORS	0	0.0	20	3		180	4	20	180	1.5	RCPT	1-P	RCPT
CUSTOM 1	2-P	RECT 1	1875	9.0	30	5	2160		6	30	1875	9.0	RECT 6	2-P	CUSTOM 1
			1875	9.0		7		2160	8		1875	9.0			
CUSTOM 1	2-P	RECT 2	1875	9.0	30	9	2160		10	30	1875	9.0	RECT 7	2-P	CUSTOM 1
			1875	5.0		11		2160	12		1875	5.0			
CUSTOM 1	2-P	RECT 3	1875	9.0	30	13	2160		14	30	1875	9.0	RECT 8	2-P	CUSTOM 1
			1875	9.0		15		2160	16		1875	5.0			
CUSTOM 1	2-P	RECT 4	1875	5.0	30	17	2160		18	20	1875	5.0	RECT 9	2-P	CUSTOM 1
			1875	9.0		19		2160	20		1875	5.0			
CUSTOM 1	2-P	RECT 5	1875	9.0	30	21	2878		22	30	1920	16.0	FIBERTOWER	2-P	CUSTOM 2
			1875	9.0		23		2878	24		1920	16.0			
CUSTOM 3	1-P	3G (OTF)	0	0.0	15	25	1200		26	15	1200	10.0	SPARE	1-P	SPARE
CUSTOM 4	2-P	SURGE ARRESTOR	0	0.0	20	27		4992	28	60	4992	20.8	HVAC UNIT	2-P	HVAC
			0	0.0		29	4992		30		4992	20.8			
SPARE	1-P	BLANK		0.0		31		0	32			0.0	BLANK	1-P	SPARE
SPARE	1-P	BLANK		0.0		33	0		34			0.0	BLANK	1-P	SPARE
SPARE	1-P	BLANK		0.0		35		0	36			0.0	BLANK	1-P	SPARE
SPARE	1-P	BLANK		0.0		37	0		38			0.0	BLANK	1-P	SPARE
SPARE	1-P	BLANK		0.0		39		0	40			0.0	BLANK	1-P	SPARE
SPARE	1-P	BLANK		0.0		41	0		42			0.0	BLANK	1-P	SPARE
					PHASE TOTALS (VA):		17727	16887							
					CURRENT PER PHASE (A):		147	121							

TOTAL CONNECTED LOAD (KVA):	33.41
TOTAL CONNECTED (AMPS):	139.38
TOTAL CALCULATED LOAD (KVA)	14.28
TOTAL CALCULATED (AMPS)	59.42
SPARE CAPACITY (KVA):	29.7

Load Calculation

Category	CONNECTED LOAD KVA	CONTINUOUS FACTOR	DEMAND FACTOR	CALCULATED LOAD KVA
Lighting	0.84	1.25	1.0	1.05
Receptacles first 10KVA	0.36	1.25	1.0	0.45
Receptacles > 10KVA	0.00	1.00	0.5	0.00
Kitchen	0.00	1.00	1.0	0.00
HVAC	4.03	1.00	0.7	2.82
SPACE HEATER	0.00	1.00	1.0	0.00
Largest Motor	0.00	1.25	1.0	0.00
Other Motor(s)	0.00	1.00	0.5	0.00
Custom 1	9.62	1.25	0.7	7.36
Custom 2	0.00	1.00	0.5	0.00
Custom 3	1.80	1.00	0.6	1.08
Custom 4	0.00	1.00	0.5	0.00
SPARE	1.2	1.00	1.0	1.2
TOTALS	17.8		0.8	14.02

1 E-2 EXISTING AC PANEL SCHEDULE
SCALE: NTS

PANEL SCHEDULE

Information:

	Panel: 10072516 RADNOR RD
SQUARE D NQOD D206Q22 N	Fed From: METER/ DEDD METROT
200 BRKR	NMD Rating:
120/240Vg 1PH 3W	RATED KVA: 43
200A BUS	Panel Type: MEGA 1 / 200% NEUTRAL

WIRE FEED

Description	Amps	TYPE	Gauge	Note
Phase	200	CU		
Neutral	200	CU		
EGC		CU		

CKT TYPE	Type	MAIN BREAKER RATING (A):				200			SYSTEM VOLTAGE (V):		240		Type	CKT TYPE
		DESCRIPTION	VA	AMPS	EXP	POSN	L1	L2	POSN	EXP	VA	AMPS	DESCRIPTION		
RCPT	1-P	RCPT	180	1.5	20	1	1020		2	20	540	7.0	LGHTS	1-P	LTHG
CUSTOM 2	1-P	SMOKE DETECTORS	0	0.0	20	3		180	4	20	180	1.5	RCPT	1-P	RCPT
CUSTOM 1	2-P	RECT 1-10	2160	12.0	30	5	3226		6	30	1875	9.0	RECT 6	2-P	CUSTOM 1
			2160	17.5		7		3226	8		1875	9.0			
CUSTOM 1	2-P	RECT 2-11	2160	17.5	30	9	3226		10	30	1875	9.0	RECT 7	2-P	CUSTOM 1
			2160	17.5		11		3226	12		1875	5.0			
CUSTOM 1	2-P	RECT 3	1875	9.0	30	13	2160		14	30	1875	9.0	RECT 8	2-P	CUSTOM 1
			1875	9.0		15		2160	16		1875	5.0			
CUSTOM 1	2-P	RECT 4	1875	5.0	30	17	2160		18	20	1875	5.0	RECT 9	2-P	CUSTOM 1
			1875	9.0		19		2160	20		1875	5.0			
CUSTOM 1	2-P	RECT 5	1875	9.0	30	21	2878		22	30	1920	16.0	FIBERTOWER	2-P	CUSTOM 2
			1875	9.0		23		2878	24		1920	16.0			
CUSTOM 3	1-P	3G (OTF)	0	0.0	15	25	1200		26	15	1200	10.0	SPARE	1-P	SPARE
CUSTOM 4	2-P	SURGE ARRESTOR	0	0.0	20	27		4992	28	60	4992	20.8	HVAC UNIT	2-P	HVAC
			0	0.0		29	4992		30		4992	20.8			
SPARE	1-P	BLANK		0.0		31		0	32			0.0	BLANK	1-P	SPARE
SPARE	1-P	BLANK		0.0		33	0		34			0.0	BLANK	1-P	SPARE
SPARE	1-P	BLANK		0.0		35		0	36			0.0	BLANK	1-P	SPARE
SPARE	1-P	BLANK		0.0		37	0		38			0.0	BLANK	1-P	SPARE
SPARE	1-P	BLANK		0.0		39		0	40			0.0	BLANK	1-P	SPARE
SPARE	1-P	BLANK		0.0		41	0		42			0.0	BLANK	1-P	SPARE
					PHASE TOTALS (VA):		16877	17887							
					CURRENT PER PHASE (A):		140	149							

TOTAL CONNECTED LOAD (KVA):	37.71
TOTAL CONNECTED (AMPS):	157.14
TOTAL CALCULATED LOAD (KVA)	16.01
TOTAL CALCULATED (AMPS)	66.70
SPARE CAPACITY (KVA):	22.8

Load Calculation

Category	CONNECTED LOAD KVA	CONTINUOUS FACTOR	DEMAND FACTOR	CALCULATED LOAD KVA
Lighting	0.84	1.25	1.0	1.05
Receptacles first 10KVA	0.36	1.25	1.0	0.45
Receptacles > 10KVA	0.00	1.00	0.5	0.00
Kitchen	0.00	1.00	1.0	0.00
HVAC	4.03	1.00	0.7	2.82
SPACE HEATER	0.00	1.00	1.0	0.00
Largest Motor	0.00	1.25	1.0	0.00
Other Motor(s)	0.00	1.00	0.5	0.00
Custom 1	11.23	1.25	0.7	9.81
Custom 2	0.00	1.00	0.5	0.00
Custom 3	1.80	1.00	0.6	1.08
Custom 4	0.00	1.00	0.5	0.00
SPARE	1.2	1.00	1.0	1.2
TOTALS	20.1		0.8	16.8

2 E-2 EXISTING AC PANEL PROPOSED SCHEDULE
SCALE: NTS

AT&T

smartlink

Trylon

DRAWING SCALES ARE INTENDED FOR 11"x17" SIZE PRINTED MEDIA ONLY.

SUBMITTALS

REV	DATE	DESCRIPTION	BY
0	08/05/22	100% FCD	TFL
1	08/26/22	100% FCD	VP
2	03/30/23	100% FCD	TFL
3	04/11/23	100% FCD	RC
4	04/21/23	100% FCD	RC
5	05/05/23	100% FCD	RC

STATE OF MARYLAND · MATTHEW K. JAMERSON · 44680 · PROFESSIONAL ENGINEER

PROFESSIONAL CERTIFICATE
I HEREBY CERTIFY THAT THESE DOCUMENTS WERE PREPARED OR APPROVED BY ME, AND THAT I AM A DULY LICENSED PROFESSIONAL ENGINEER UNDER THE LAWS OF THE STATE OF MARYLAND, LICENSE NO. 44680, EXPIRATION DATE 12/10/2023

PROJECT TITLE

USID: 3897
FA#: 10072516

RADNOR RD

5601 GOLDSBORO ROAD
BETHESDA, MD 20817

EXISTING SELF SUPPORT TOWER

SHEET DESCRIPTION

AC PANEL SCHEDULE

SHEET NO.

E-2

SITE DATA INPUT WORKSHEET – INDOOR SITE POWER ESTIMATE TOOL

Region:	NE
Market:	WASHINGTON D.C./MARYLAND
FA:	10072516
USID:	3897
Location Name:	RADNOR RD
Date Calc:	3/30/2023
Completed By:	SML
PACE JOB ID:	MRV361040291
Job Description:	GROUND
Field Notes:	

-48V PRIMARY VOLTAGE DC PLANT SPECIFIED

[illegible]	140	WATTS	=	6 AMPS at +24V
-48V DC Equipment LOAD:	10443	WATTS	=	308 AMPS at -48V
[illegible]	[illegible]	[illegible]	[illegible]	[illegible]
TOTAL PRIMARY -48V LOAD:	10443	WATTS	=	308 AMPS at -48V

[DC PLANT CONFIGURATION CAN BE REVIEWED ON DC PLANT WORKSHEET]

DC PLANT: Vertiv STD -48VDC NetSure 7100 Plant 1000A	
-48V RECTIFIERS REQUIRED (N+1):	11
-48V RECTIFIER SLOTS:	ZZ
CONV. TYPE:	[illegible]
+24V CONVERTERS REQUIRED:	2
+24V CONVERTER SLOTS:	9
ESTIMATED BATTERY RESERVE TIME	
6 170 AH 18V STRINGS =	4.8 HOURS

ESTIMATED SITE MAX. AC LOAD (AMPS):	148.28 AMPS
ESTIMATE 200A SERVICE SUFFICIENT	
SITE GENERATOR CAPACITY REQUIRED:	20 KW
ON SITE GENERATOR CAPACITY:	0 KW
(NO ON-SITE GENERATOR)	
RECOMMENDED ENVIRO SYSTEM:	[illegible]
SPECIFIED ENVIRONMENTAL SYSTEM:	5-TONS
ESTIMATE SUFFICIENT HVAC CAPACITY	

STEP 1: ENTER QUANTITIES OF EQUIPMENT & DC OPERATING VOLTAGE:

NOTE: LOAD VALUES FOR ANY EQUIPMENT CAN BE USER-SPECIFIED ON THE POWER CONSUMPTION WORKSHEET - USER CHANGES TO DEFAULT LOAD VALUES ARE HIGHLIGHTED IN BRIGHT

STEP 2: ENTER DC PLANT TYPE FROM DROP-DOWN MENU:

[CUSTOM DC PLANT CONFIGURATION FOR NON-STANDARD VOLTAGES OR PLANTS]

Vertiv STD -48VDC NetSure 7100 Plant 1000A

-48V PRIMARY DC PLANT SPECIFIED

[DC PLANT CONFIGURATION CAN BE REVIEWED ON DC PLANT WORKSHEET]

STEP 2A: THIS STEP ONLY SHOWN IF "GENERIC" DC PLANT PLANT TYPE HAS BEEN SELECTED:

STEP 2B: [illegible]

STEP 3: DO YOU WANT TO CONFIGURE A STANDARD STAND-ALONE DC CONVERTER SYSTEM? IN

NOTE: IF YOU SELECT "Y" ANY INTEGRATED DC PLANT CONVERTER OPTIONS WILL BE BYPASSED

STEP 4: ENTER INDOOR SITE BUILDING/SHELTER DATA:

(Square footage used for Interior AC lighting LOAD calculation)

SELECT SITE ENCLOSURE TYPE & SIZE: OTHER

SPECIFY TOTAL FLOOR SPACE (SQUARE FEET): 240

STEP 5: ENTER SITE HVAC SYSTEM DATA:

	Type	Size	QTY
SPECIFY PRIMARY MECHANICAL COOLING	HVAC	5	1
SPECIFY PRIMARY MECHANICAL COOLING			
SPECIFY PRIMARY MECHANICAL COOLING			
SPECIFY PRIMARY MECHANICAL COOLING			
SPECIFY PRIMARY MECHANICAL COOLING			

ARE THERE SITE HVAC HEATING UNITS? N

TOTAL SPECIFIED SITE HVAC: 5-TONS

ESTIMATED HVAC SYSTEM REQUIREMENT: 3-TONS COOLING

IF Start_Cont w Gen Cont IS SELECTED USER NEEDS TO VERIFY GENERATOR RUN ALARM IS WIRED THROUGH SMART CONTROLLER.
DC LOADS FOR SHELTER ENVIROMENTAL SYSTEMS ARE AUTOMATICALLY ADDED TO THE DC PLANT LOAD

STEP 6: ENTER SITE STATIONARY GENERATOR DATA:

DOES SITE HAVE A STATIONARY GENERATOR? N

ESTIMATED CAPACITY REQUIRED: 20 KW (NO SITE GENERATOR)

STEP 7: ENTER SITE BATTERY CONFIGURATION DATA:

SELECT SINGLE STRING BATTERY CAPACITY (AH): 170

SPECIFY TOTAL QUANTITY OF BATTERY STRINGS: 6

TOTAL SITE BATTERY CAPACITY (AH): 1020

[SITE STATIONARY GENERATOR CAPACITY REQUIRED CALCULATION]

NOTE: 12 VOLT MONOBLOCK BATTERIES - 4 batteries per -48V String

ESTIMATED BATTERY RESERVE TIME: 4.79 HOURS [BATTERY RESERVE TIME]

- SITES WITH STATIONARY GENSETS
- Equipped with Vertiv DC Plant (NEC 2008) equipped with 200 amp Battery disconnect breakers shall receive no greater than 2 shelves of 190 AH batteries.
- All other locations with legacy DC plants (typically equipped with battery disconnect breakers <200 amps) shall receive no greater than 3 shelves of 190 AH batteries

- ALL SITES WITHOUT A STATIONARY GENSET
- Shall be engineered with 4 hours of battery reserve.

SITE POWER CALCULATION TOOL - VERSION 6.24 - July 7, 2021 R.BADGERO

ANY QUESTIONS PLEASE CONTACT RICK BADGERO (RB8429@ATT.COM)

QTY	Ericsson	VOLTAGE	WATTS
	UMTS 3G EQUIPMENT		
	Ericsson RBS3206 Mode B 3S1C - 1 CAB	24	0
	Ericsson RBS3206 Mode B 3S2C - 1 CAB	48	0
	NON-DBIF Ericsson 3rd, 4th & 5th Carrier		
	Ericsson RBS3206 Mode B 3S2C - 2 CAB	48	0
	Ericsson RBS3206 Mode B 3S4C - 2 CAB	48	0
	Ericsson RBS3206 Mode B 3S6C - 3 CAB	48	0
	DBIF Ericsson 3rd, 4th & 5th Carrier		
	Ericsson RBS3206 Mode B 3S2C - 1 CAB	24	0
	Ericsson RBS3206 Mode B 3S4C - 1 CAB [Select RRUs from section below]	24	0
	Ericsson RBS3206 Mode B 3S4C - 1 CAB [Select RRUs from section below]	24	0
	Ericsson RBS3206 Mode B 3S6C - 2 CAB [Select RRUs from section below]	24	0
	Ericsson 3900 MICRO Mode B	24	0
	Ericsson Mobile Broadband Modules	48	0
	[FUTURE]		
	[FUTURE]		
	LTE 4G & Multi-Std EQUIPMENT		
	Ericsson LTE RBS6201 BBU - 1 DUL	48	0
	Ericsson LTE RBS6201 BBU - 2 DUL	48	0
	Ericsson WCDMA RBS6201 - 1 DUW	48	0
	Ericsson LTE RBS6201 BBU - 1DUS	48	0
	Ericsson LTE RBS6201 BBU - 2DUS	48	0
	Ericsson XMU	48	0
	Pico PIM Card	48	0
	6630 EBIU Card	48	0
	6843 EBIU Card	48	0
	6675 EBIU Card	48	0
	[FUTURE]		
	[FUTURE]		

QTY	Ericsson	VOLTAGE	WATTS
	A-LU MACRO Mode B (3S1C - 40W)	24	0
	A-LU MACRO Mode B (3S2C - 60W)	24	0
	A-LU MACRO Mode B (3S3C - 60W)	24	0
	A-LU MACRO Mode B (3S4C - 60W)	24	0
	A-LU MACRO Mode B (3S6C - 60W - 2CAB)	24	0
	A-LU MICRO Mode B	24	0
	A-LU 9216 dDU Distributed Mode B MU	48	0
	A-LU 9216 dAU Distributed Mode B MU	48	0
	[FUTURE]		
	[FUTURE]		
	LTE 4G & Multi-Std EQUIPMENT		
	A-LU 9216 LTE BBU [w/max 3 eCEM-s]	48	0
	Nokia FSM-4 Chassis (LTE)	48	336
	Nokia FSM-4 Chassis (5G)	48	1392
	[FUTURE]		0
	[FUTURE]		0
	[FUTURE]		0
	[FUTURE]		0
	[FUTURE]		0

QTY	BAND/DIR	Radio Heads	VOLTAGE	WATTS
		RRUS 11	48	0
		RRUS 12 - A2	48	0
		RRUS 32 B66	48	0
		RRUS 32 B30	48	0
		RRUS 32 B2	48	0
		RRU 4415 B25	48	0
		RRU 4426 B66	48	0
		RRU 4478 B14	48	0
		RRU 4478 B5	48	0
		RRUS E2 B29	48	0
		RRUS 4449 B5/B12	48	0
		RRUS 8843 B2/B66	48	0
		RRUS 2253 B2, B66	48	0
		RRUS 2208 B46	48	0
		AIR 3246 B2/5, B66	48	0
		AIR 6301 radio	48	0
		AIR 1261 radio	48	0
		AIR 1641 B2/B66	48	0
		LPRU 4449 B5/B12	48	0
		LPRU 4420 B2/B66	48	0
		RRUS 2253 B14	48	0
		AIR 6449 B46	48	0
		AIR 6449 B77	48	0
		RRU 3863 B77	48	0
		[FUTURE]		
		[FUTURE]		
		[FUTURE]		
		[FUTURE]		
		[FUTURE]		
		[FUTURE]		
		[FUTURE]		
		[FUTURE]		
		[FUTURE]		
		[FUTURE]		

QTY	BAND/DIR	Radio Heads	VOLTAGE	WATTS
		2x40 [L7]	48	0
		2x40 [B29]	48	0
		2x60 [L8]	48	0
		2x60 [L9]	48	0
		2x60 B66 [L2]	48	0
		2x60 [L8]	48	0
		2x60 [L3]	48	0
3	OUT	4x35 B30 [L2]	48	1440
		2x60 B4 [L9]	48	0
3	OUT	4x30 B66 [L9]	48	1632
3	OUT	4x45 B66 [L2]	48	2880
		Flexi EM FRBI	48	0
2	OUT	AirScale B5 AHCA	48	1620
		AirScale B30 AHNA	48	0
0		AirScale (Micro) B29 AHFB	48	0
0		AirScale (Micro) B66 AHEB	48	0
0		AirScale Dual Band B25/66 AHFB	48	0
0		AirScale Dual Band B12/71 AHLBA	48	0
0		AirScale Dual Band B5/13 AHBCB	48	0
0		AirScale AAS 32 GHz AEVB	48	0
3	OUT	AirScale mMIMO B46 AHEB AHLBA	48	2880
3	OUT	AirScale Band 77 AEQK	48	2235
0		AirScale Band 77 A2Q(V)	48	0
		[FUTURE]		
		[FUTURE]		
		[FUTURE]		
		[FUTURE]		

QTY	Andrew	VOLTAGE	WATTS
0	Andrew (12 module mops FRAME)	24	0
0	Andrew 135 Volt Module	24	0
	[FUTURE]		
0	Powerwave (12 module mops FRAME)	24	0
0	Powerwave 90 Volt Module	24	0
0	Powerwave 120 Volt Module	24	0
0	Powerwave 180 Volt Module	24	0
	[FUTURE]		
	[FUTURE]		
0	DCI 135 Volt DAB SCPA Module	24	0
0	DCI 120 Volt DAC SCPA Module	24	0
	[FUTURE]		

QTY	A-LU 7705 SAR-8 COLOCATE EQUIPMENT	VOLTAGE	WATTS
1	A-LU 7705 SAD	24	80
	[FUTURE]		
	A-LU MPR-3600 MW Outdoor Unit - IDU	48	0
0	A-LU MPR-3600 MW Outdoor Unit - ODU	48	0
0	A-LU MPR-3600 MW (MPT-HL Indoor)	48	0
	[FUTURE]		
0	Cisco MWR-2941 SAD	48	0
0	Cisco SAD ASR-901	48	0
0	Cisco 7609 ED6 (SONET) MJH	48	0
0	Cisco 5454 MSP (MW Ring Config.)	48	0
	[FUTURE]		
0	Tru-Position UMU (E911)	48	0
1	GENERIC Ethernet NID	24	60
0	GENERIC Hydrogen Detector	48	0
0	GENERIC RET Controller	48	0
0	GENERIC RXAIT	48	0
0	GENERIC Smoke Detector	48	0
0	GENERIC TMA System	48	0
0	GENERIC Tower Lighting (OD)	48	0
0	NG-911	48	0
0	Cisco 2911	48	0
	[FUTURE]		
0	FLX-12 Cabinet	48	0
0	FLX-18 Cabinet	48	0
0	FLX-21 Cabinet	48	0
	[FUTURE]		
	[FUTURE]		
	[FUTURE]		
	[FUTURE]		
	[FUTURE]		

[CUSTOM ADDITIONAL LOADS DEFINED ON POWER CONSUMPTION WORKSHEET]

QTY	MAINT	USER SPECIFIED DC EQUIPMENT	VOLTAGE	WATTS
0		UFISPACE S9500-30DS	48	0
3	DUT	NOKIA AEQU	48	2628
0		ALU B42	48	0
0		ECU	48	0
0		DCSPD	48	0
0		CANDELA PERKINS	48	0
0		[illegible]	48	0
0		HVAC DC MOTOR	48	0
0			48	0
0			48	0
0			48	0
0			48	0
0			48	0
0			48	0
0			48	0
		TOTAL USER SPECIFIED WATTS:		2628
		TOTAL -24V [27V] AMPS:		0
		TOTAL -48V [54V] AMPS:		48.7

[CUSTOM ADDITIONAL LOADS DEFINED ON POWER CONSUMPTION WORKSHEET]

QTY	USER SPECIFIED AC EQUIPMENT	VOLTAGE	KVA
0	GEN CHARGER	120	0
0	GEN BLOCK HEATER	120	0
0	TOWERLIGHT	120	0
0	INNOVATION HVAC	240	0
0	TEADEMRAD	240	0
0	NETSURE ANCILLARY	120	0
0	240 RECTIFIER	120	0
0	CORD REEL RECPT	120	0
0	TELCO OSC	120	0
0	[illegible]	120	0
	TOTAL USER SPECIFIED KVA:		0
	TOTAL 120VAC AMPS:		0
	TOTAL 240VAC AMPS:		0

AT&T

smartlink

Trylon

DRAWING SCALES ARE INTENDED FOR 11"x17" SIZE PRINTED MEDIA ONLY.

SUBMITTALS

REV	DATE	DESCRIPTION	BY
0	08/05/22	100% FCD	TFL
1	08/26/22	100% FCD	VP
2	03/30/23	100% FCD	TFL
3	04/11/23	100% FCD	RC
4	04/21/23	100% FCD	RC
5	05/05/23	100% FCD	RC

STATE OF MARYLAND
MATTHEW K. JAMERSON
44680
PROFESSIONAL ENGINEER

PROFESSIONAL CERTIFICATE

I HEREBY CERTIFY THAT THESE DOCUMENTS WERE PREPARED OR APPROVED BY ME, AND THAT I AM A DULY LICENSED PROFESSIONAL ENGINEER UNDER THE LAWS OF THE STATE OF MARYLAND, LICENSE NO. 44680, EXPIRATION DATE 12/10/2023

PROJECT TITLE

USID: 3897
FA#: 10072516

RADNOR RD

5601 GOLDSBORO ROAD
BETHESDA, MD 20817

EXISTING SELF SUPPORT TOWER

SHEET DESCRIPTION

POWER LOAD CALCULATIONS

SHEET NO.

E-3

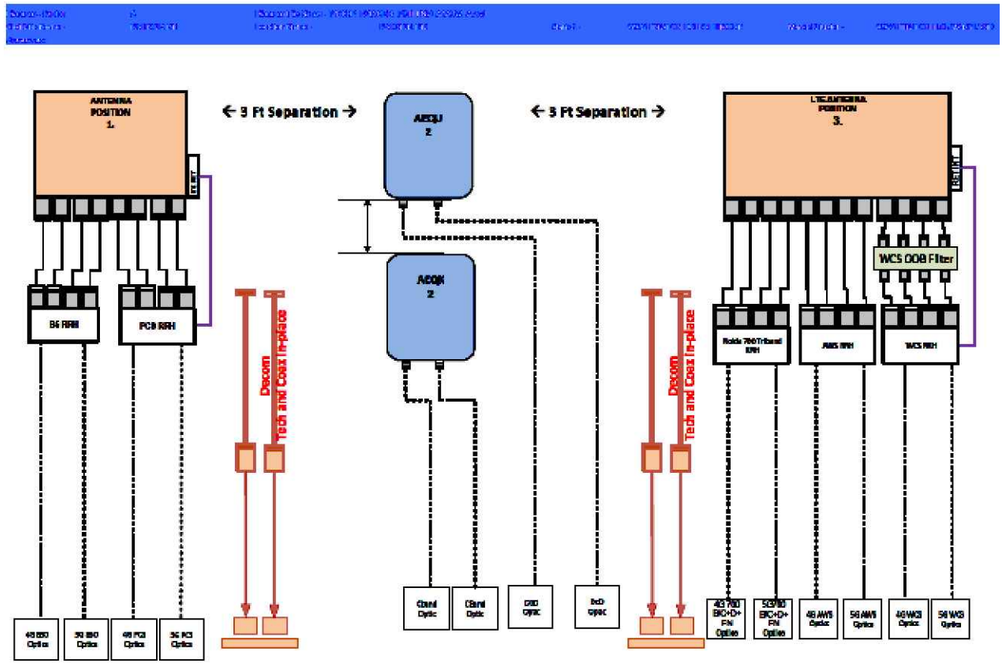

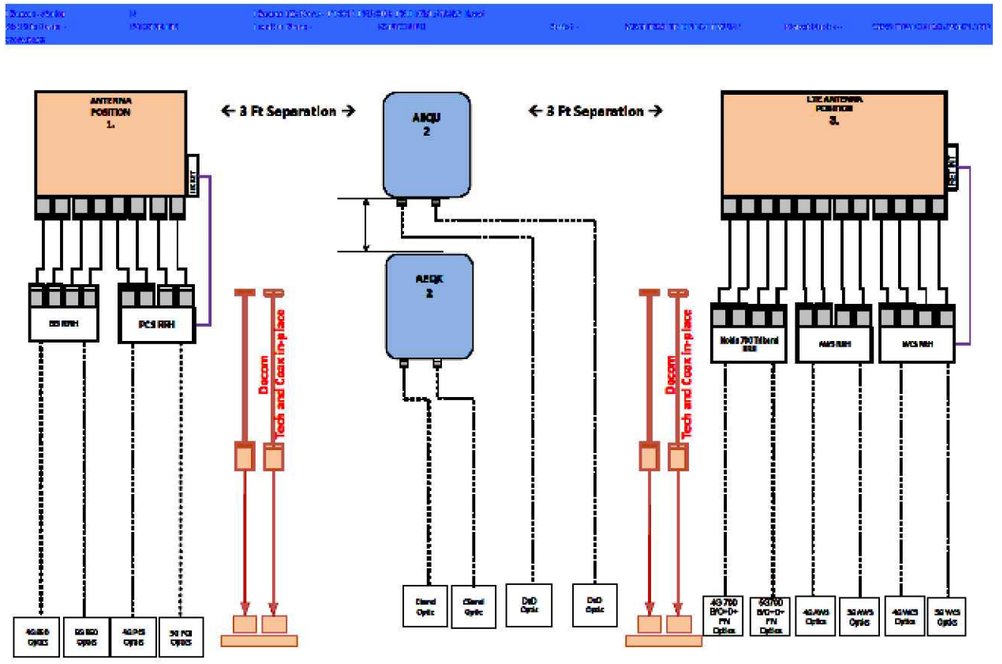

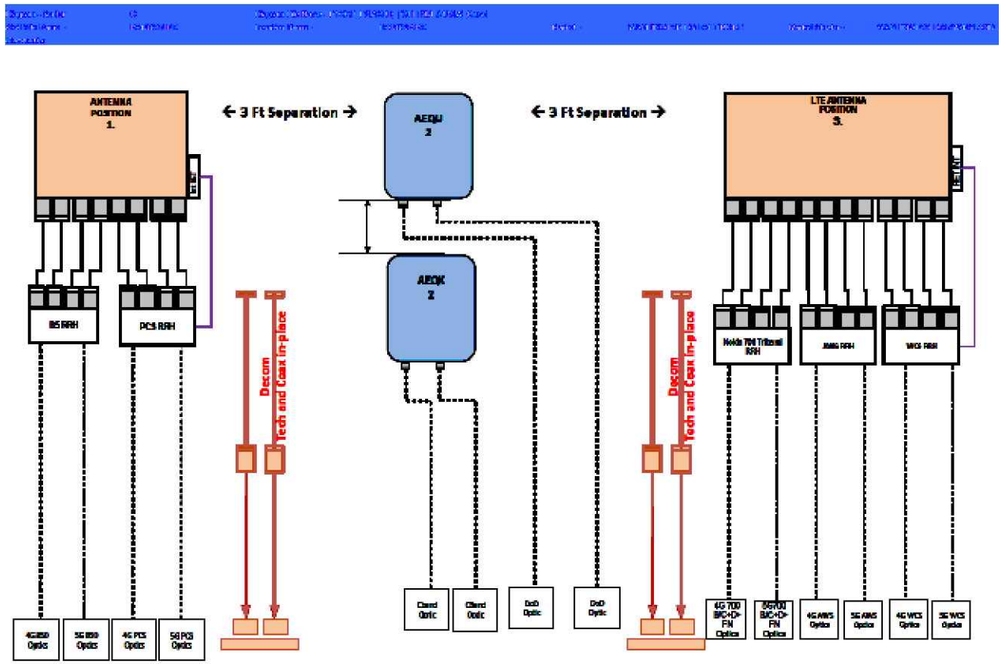

RFDS ID: 4469754 ISSUE DATE: 10/05/2021

AT&T

smartlink

Trylon

DRAWING SCALES ARE INTENDED FOR 11"x17" SIZE PRINTED MEDIA ONLY.

SUBMITTALS

REV	DATE	DESCRIPTION	BY
0	08/05/22	100% FCD	TFL
1	08/26/22	100% FCD	VP
2	03/30/23	100% FCD	TFL
3	04/11/23	100% FCD	RC
4	04/21/23	100% FCD	RC
5	05/05/23	100% FCD	RC

STATE OF MARYLAND
MATTHEW K. JAMES
44680
PROFESSIONAL ENGINEER

PROFESSIONAL CERTIFICATE
I HEREBY CERTIFY THAT THESE DOCUMENTS WERE PREPARED OR APPROVED BY ME, AND THAT I AM A DULY LICENSED PROFESSIONAL ENGINEER UNDER THE LAWS OF THE STATE OF MARYLAND, LICENSE NO. 44680, EXPIRATION DATE 12/10/2023

PROJECT TITLE

USID: 3897
FA#: 10072516

RADNOR RD

5601 GOLDSBORO ROAD
BETHESDA, MD 20817

EXISTING SELF SUPPORT TOWER

SHEET DESCRIPTION

RF PLUMBING DIAGRAM

SHEET NO.

RF–1

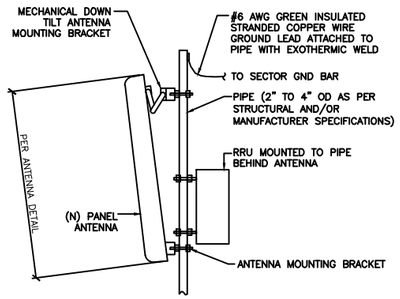

1 G-1 ANTENNA PIPE MOUNT GROUNDING DETAIL

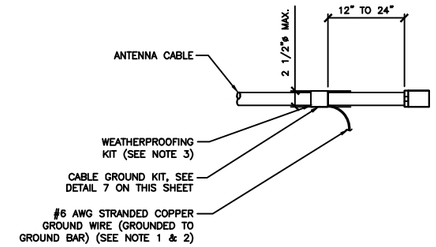

NOTES:

1. DO NOT INSTALL CABLE GROUND KIT AT A BEND AND ALWAYS DIRECT GROUND WIRE DOWN TO GROUND BAR
2. GROUNDING KIT SHALL BE ANDREW SUREGROUND TYPE KIT WITH TWO-HOLE LUG
3. WEATHER PROOFING SHALL BE ANDREW TWO-PART TAPE SUPPLIED WITH KIT. COLD SHRINK SHALL NOT BE USED

2 G-1 CABLE GROUND KIT DETAIL

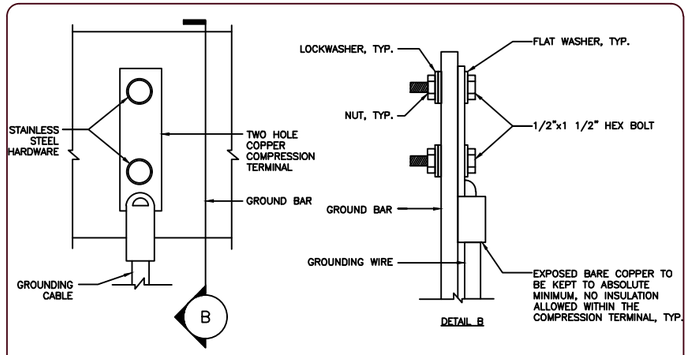

NOTES:

1. "DOUBLING UP" OR "STACKING" OF CONNECTIONS IS NOT PERMITTED.
2. OXIDE INHIBITING COMPOUND TO BE USED AT ALL LOCATIONS AND TO BE APPLIED PRIOR TO ADDING HARDWARE.

3 G-1 TYPICAL GROUND LUG CONNECTION DETAIL

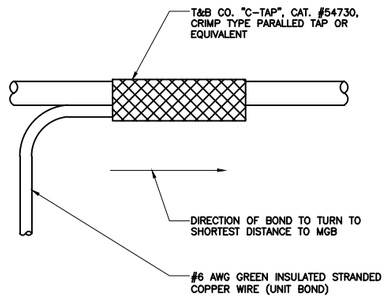

4 G-1 GROUNDING WIRE CONNECTION

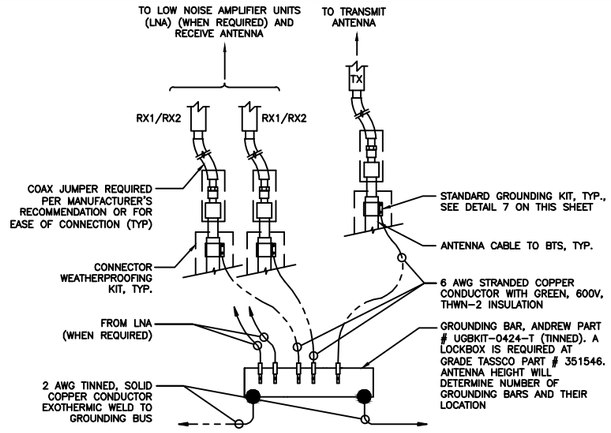

5 G-1 ANTENNA GROUNDING BAR CONNECTION DETAIL

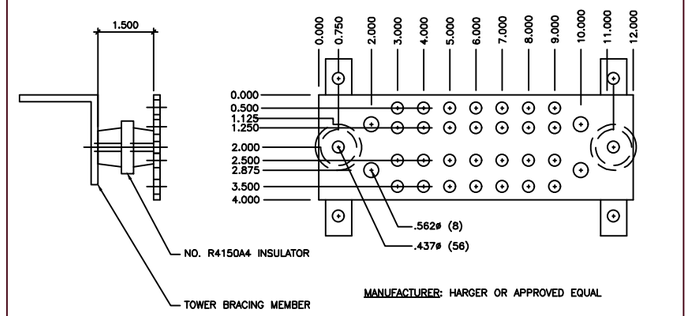

MANUFACTURER: HARGER OR APPROVED EQUAL

6 G-1 ANTENNA (12") GROUND BAR DETAIL

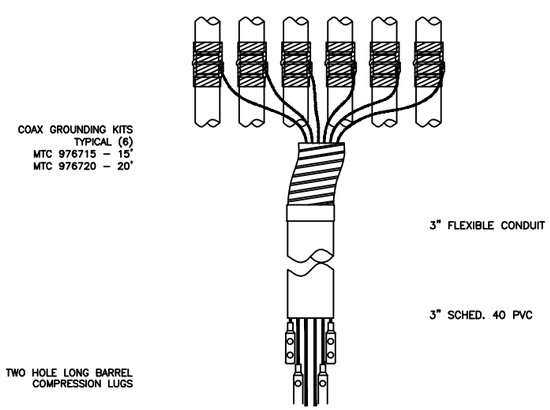

7 G-1 COAX GROUND KIT

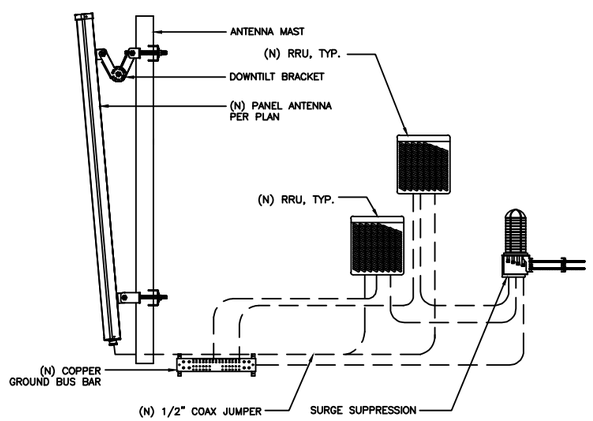

8 G-1 RRU GROUNDING DETAIL

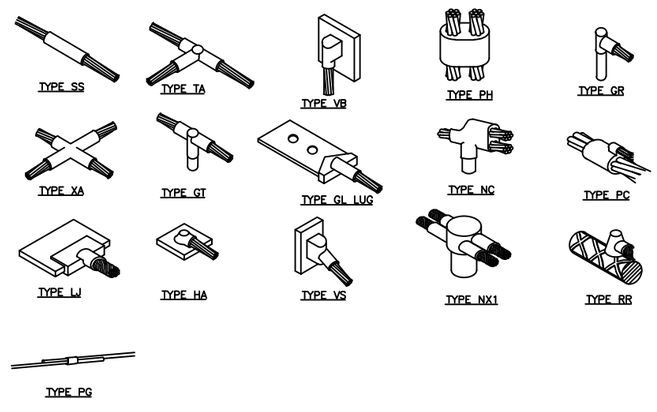

9 G-1 TYPICAL CADWELD TYPES

AT&T

smartlink

Trylon

DRAWING SCALES ARE INTENDED FOR 11"x17" SIZE PRINTED MEDIA ONLY.

SUBMITTALS

REV	DATE	DESCRIPTION	BY
0	08/05/22	100% FCD	TFL
1	08/26/22	100% FCD	VP
2	03/30/23	100% FCD	TFL
3	04/11/23	100% FCD	RC
4	04/21/23	100% FCD	RC
5	05/05/23	100% FCD	RC

STATE OF MARYLAND
MATTHEW K. JAMISON
44680
PROFESSIONAL ENGINEER

PROFESSIONAL CERTIFICATE

I HEREBY CERTIFY THAT THESE DOCUMENTS WERE PREPARED OR APPROVED BY ME, AND THAT I AM A DULY LICENSED PROFESSIONAL ENGINEER UNDER THE LAWS OF THE STATE OF MARYLAND, LICENSE NO. 44680, EXPIRATION DATE 12/10/2023

PROJECT TITLE

USID: 3897
FA#: 10072516

RADNOR RD

5601 GOLDSBORO ROAD
BETHESDA, MD 20817

EXISTING SELF SUPPORT TOWER

SHEET DESCRIPTION

GROUNDING DETAILS

SHEET NO.

G-1

GENERAL NOTES

1. GENERAL REQUIREMENTS

A. PURPOSE AND INTENT
1.THE DRAWING AND SPECIFICATION ARE INTENDED TO BE FULLY EXPLANATORY AND SUPPLEMENTARY, HOWEVER, SHOULD ANYTHING BE SHOWN, INDICATED, OR SPECIFIED ON ONE AND NOT THE OTHER, IT SHALL BE DONE THE SAME AS IF DISCREPANCIES BETWEEN REQUIREMENTS SHOWN IN BOTH, THE MORE STRINGENT REQUIREMENTS SHALL APPLY.
2. THE INTENTION OF THE DOCUMENT IS TO INCLUDE ALL LABOR AND MATERIALS REASONABLY NECESSARY FOR THE PROPER EXECUTION AND COMPLETION OF THE WORK AS STIPULATED IN THE CONTRACT.

A. CONFLICTS
1. VERIFY ALL MEASUREMENTS AT THE SITE BEFORE ORDERING MATERIAL OR DOING ANY WORK, NO EXTRA CHARGE OR COMPENSATION WILL BE ALLOWED DUE TO DIFFERENCES BETWEEN ACTUAL DIMENSIONS OR DIMENSIONS SHOWN ON PLANS SUBMIT NOTICE OF ANY DISCREPANCY IN DIMENSIONS OR OTHERWISE TO AT&T FOR RESOLUTION BEFORE PROCEEDING WITH THE WORK.
2. NO PLEA OF IGNORANCE OF CONDITIONS THAT EXIST, OR OF DIFFICULTIES OR CONDITIONS THAT MAY BE ENCOUNTERED, OR OF ANY OTHER RELEVANT MATTER CONCERNING THE EXECUTION OF THE WORK WILL BE ACCEPTED AS AN EXCUSE FOR ANY FAILURE OR OMISSION ON THE PART OF THE CONTRACTOR TO FULFILL EVERY DETAIL OF ALL THE REQUIREMENTS OF THE CONSTRUCTION DOCUMENTS GOVERNING THE WORK.

A. CLEANING
1. KEEP THE SITE FREE FROM ACCUMULATION OF WASTE AND RUBBISH CAUSED BY EMPLOYEES AT THE COMPLETION OF THE WORK, REMOVE ALL WASTE AND NON-CONSTRUCTION MATERIAL INCLUDING ALL CONTRACT TOOLS, SCAFFOLDING, AND SURPLUS MATERIAL AND LEAVE SITE CLEAN AND READY FOR USE.

A. CODES
1.CONTRACTOR SHALL BE RESPONSIBLE FOR FOLLOWING ALL LAWS, REGULATIONS, AND RULES PROMULGATED BY FEDERAL STATE AND LOCAL AUTHORITIES WITH JURISDICTION OVER THE SALTIER. THIS RESPONSIBILITY IS IN EFFECT REGARDLESS OF WEATHER THE LAW, ORDINANCE, REGULATION OR RULE IS MENTIONED IN THESE SPECIFICATIONS.

A. LICENSING
1. CONTRACTOR SHALL HAVE AND MAINTAIN A VALID CONTRACTOR'S LICENSE FOR THE LOCATION IN WHICH THE WORK IS TO BE PERFORMED. FOR JURISDICTIONS THAT LICENSE INDIVIDUAL TRADES, THE TRADESMAN OR SUBCONTRACTOR PERFORMING THOSE SHALL BE LICENSED, RESEARCHED AND COMPLY WITH THE LICENSING LAWS, PAY LICENSE FEES, AND SELECT AND INFORM SUBCONTRACTORS REGARDING THESE LAWS.

A. OSHA
1. FOLLOW ALL APPLICABLE RULES AND REGULATIONS OF THE OCCUPATIONAL SAFETY AND HEALTH ADMINISTRATIONS AND STATE LAWS BASED IN THE FEDERAL OCCUPATION SAFETY AND HEALTH ACT. THESE REGULATIONS INCLUDE, BUT ARE NOT LIMITED TO, REGULATIONS DEALING WITH TOWER CONSTRUCTION AND SAFETY, EXCAVATION AND TRENCHING, AND WORK IN CONFINED SPACES. ENSURE THAT EMPLOYEES AND SUBCONTRACTORS WEAR HARD HATS AT ALL TIMES DURING CONSTRUCTION.

A. PHOTOS
1. PROVIDE PHOTOGRAPHIC EVIDENCE OF ALL FOUNDATION INSTALLATIONS, GROUNDING, AND TRENCHING AFTER PLACEMENT OF UTILITIES PRIOR TO BACKFILL.

A. BUILDING PERMITS
1. CONTRACTOR WILL SUBMIT CONSTRUCTION DOCUMENTS TO THE JURISDICTIONAL AUTHORITY FOR PLAN CHECK AND REVIEW. CONTRACTOR WILL SUBMIT LICENSING AND WORKMAN'S COMPENSATION INFORMATION TO THE JURISDICTION AS REQUIRED TO OBTAIN THE BUILDING PERMIT, CONTRACTOR SHALL COORDINATE AND SCHEDULE REQUIRED INSPECTIONS AND POST REQUIRED PERMITS AT THE JOB SITE COMPLY WITH SPECIFIC PROJECT RELATED REQUESTS AND SUGGESTIONS MADE BY BUILDING INSPECTOR, AND INFORM CONSTRUCTION MANAGER OF ANY SUCH WORK THAT MAY BE BEYOND THE SCOPE OF THE CONTRACT OR DEVIATE FROM THE CONSTRUCTION DOCUMENT. AT&T WILL REIMBURSE THE CONTRACTOR FEES FOR PLAN REVIEW, BUILDING PERMIT, CONNECTIONS, AND INSPECTIONS. (INCLUDED IN THE BASE PROPOSAL).

A. ZONING REGULATIONS AND CONDITIONAL USE PERMITS
1. CONTRACTOR WILL SUBMIT ALL ZONING AND CONDITIONAL USE PERMITS. SOME USE PERMITS MAY HAVE SPECIFIC REQUIREMENTS FOR THE SITE RELATED TO CONSTRUCTION, SUCH AS NOISE REGULATIONS, HOURS OF WORK, ACCESS LIMITATIONS, ETC. THE CONSTRUCTION MANAGER WILL INFORM THE CONTRACTOR OF THESE REQUIREMENTS AT THE PRE-BID MEETING OR AS SHOWN IN THE CONSTRUCTION DOCUMENTS.

A. FAA PERMIT AND TOWER LIGHTING
1. REFER TO CONSTRUCTION DOCUMENTS AND CONSTRUCTION MANAGER FOR FAA AND STATE LIGHTING REQUIREMENTS. CONTRACTOR SHALL PROVIDE TEMPORARY FM APPROVED LIGHTING UNTIL PERMANENT LIGHTING IS OPERATIONAL.

A. TOWER SECURITY
1. IF REQUIRED, TOWER MUST BE FENCED, TEMPORARILY OR PERMANENTLY WITHIN 24 HOURS OF ERECTION. DO NOT ALLOW THE GATE ACCESSING THE TOWER AREA TO REMAIN OPEN OR UNATTENDED ANY TIME FOR ANY REASON. KEEP THE GATE CLOSED AND LOCKED WHEN NOT IN USE.

L. SITE CONTROL
1. THE CONTRACTOR IS COMPLETELY RESPONSIBLE FOR CONTAINMENT OF SEDIMENT AND CONTROL OF EROSION AT THE SITE. ANY DAMAGE TO ADJACENT OR DOWNSTREAM PROPERTIES WILL BE CORRECTED BY THE CONTRACTOR AT NO EXPENSE TO AT&T.
2. THE CONTRACTOR IS TO MAINTAIN ADEQUATE DRAINAGE AT ALL TIMES. DO NOT ALLOW WATER TO STAND OR POND. ANY DAMAGE TO STRUCTURES OR WORK ON THE SITE CAUSED BY INADEQUATE MAINTENANCE OF DRAINAGE PROVISIONS WILL BE THE RESPONSIBILITY OF THE CONTRACTOR AND ANY COST ASSOCIATED WITH REPAIRS FOR SUCH DAMAGE WILL BE AT THE CONTRACTOR'S EXPENSE.
3. ALL WASTE MATERIAL SHALL BE PROPERLY DISPOSED OF OFF-SITE OR AS DIRECTED BY CONSTRUCTION MANAGER AND IN ACCORDANCE WITH JURISDICTIONAL AUTHORITIES.

M. LIVESTOCK PROTECTION
1. PROTECT AND SECURE LIVESTOCK. MAINTAIN AND SECURE EXISTING PERIMETER FENCE AND/OR GATE ENCLOSURES.

2. SITE PREPARATION

A. SCOPE OF WORK INCLUDES
1. PROTECTION OF EXISTING TREES, VEGETATION AND LANDSCAPING MATERIALS WHICH MIGHT BE DAMAGED BY CONSTRUCTION ACTIVITIES.
2. TRIMMING OF EXISTING TREES AND VEGETATION AS REQUIRED FOR PROTECTION DURING CONSTRUCTION ACTIVITIES.
3. CLEANING AND GRUBBING OF STUMPS, VEGETATION, DEBRIS, RUBBISH, DESIGNATED TREES AND SITE IMPROVEMENTS.
4. TOPSOIL STRIPPING AND STOCKPILING.
5. TEMPORARY EROSION CONTROL, SILTATION CONTROL, AND DUST CONTROL CONFORMING TO LOCAL REQUIREMENTS AS APPLICABLE.
6. TEMPORARY PROTECTION OF ADJACENT PROPERTY, STRUCTURES, BENCHMARKS, AND MONUMENTS.
7. PROTECTION AND TEMPORARY RELOCATION, STORAGE AND RE-INSTALLATION OF EXISTING FENCE AND OTHER SITE IMPROVEMENTS SCHEDULED FOR RE-USE.
8. REMOVAL AND LEGDK DISPOSAL OF CLEARED MATERIALS.

B. PRODUCTS AND MATERIALS (AS APPROVED BY CONSTRUCTION MANAGER OR AS NOTED IN CONSTRUCTION DOCUMENTS)
1. MATERIALS USED FOR TREE PROTECTION, EROSION CONTROL, SILTATION CONTROL, AND DUST CONTROL.

3. EARTHWORK

A. SCOPE OF WORK INCLUDES
1. EXCAVATION, TRENCHING, FILLING, COMPACTION, AND GRADING FOR STRUCTURES, SITE IMPROVEMENTS AND UTILITIES.
2. MATERIALS FOR SUB-BASE, DRAINAGE, BACKFILL AND GRAVEL FOR SLABS, PAVEMENT AND IMPROVEMENTS.
3. ROCK EXCAVATION WITHOUT BLASTING.
4. SUPPLY OF ADDITIONAL MATERIALS FOR OFFSITE AS REQUIRED.
5. REMOVAL AND LEGDK DISPOSAL OF EXCAVATED MATERIAL AS REQUIRED.

B. QUALITY ASSURANCE
1. COMPACTION
A. UNDER STRUCTURES, BUILDING SLABS, PAVEMENTS AND WALKWAYS WILL OBTAIN A 95% COMPACTION AT A MINIMUM DRY DENSITY AS DETERMINED BY ASTM 0-1557 OR WITH PLUS OR MINUS 3% OF THE MOISTURE CONTENT.
2. GRADING TOLERANCES OUTSIDE BUILDING LINES
A. LAWNS, UNPAVED AREAS AND WALKS PLUS OR MINUS 1 INCH.
B. UNDER PAVEMENTS PLUS OR MINUS $\frac{1}{2}$ INCH.
3. GRADING TOLERANCES FOR FILL UNDER CONCRETE APPLICATIONS
A. PLUS OR MINUS $\frac{1}{2}$ INCH MEASURED WITH 10 FOOT STRAIGHT EDGE.

C. PRODUCTS AND MATERIALS (AS APPROVED BY CONSTRUCTION MANAGER OR AS NOTED IN CONSTRUCTION DOCUMENTS)
1. SUB-BASE MATERIAL: GRADED MIXTURE OF NATURAL OR CRUSHED GRAVEL, CRUSHED STONE OR SLAG, AND NATURAL SAND.
2. WASHED MATERIAL, EVENLY GRADED MIXTURE OF CRUSHED STONE OR GRAVEL WITH 95% PASSING A 1-1/2 INCH SIEVE.
3. GRADING MATERIAL WILL CONSIST OF SATISFACTORY NATIVE OR IMPORTED SOIL MATERIALS FREE OF CLAY, ROCK OR GRAVEL NOT LARGER THAN 2 INCHES IN ANY DIMENSION, DEBRIS, WASTE, FROZEN MATERIALS AND OTHER UNSUITABLE MATERIALS WILL NOT BE ALLOWED FOR USE. IMPORTED MATERIALS SHALL HAVE A CLAY CONTENT OF NO MORE THAN 5%.
4. GRAVEL MATERIAL: EVENLY GRADED MIXTURE OF CRUSHED STONE OR GRAVEL WITH 95% PASSING A 1-1/2 INCH SIEVE.
5. GEOTEXTILE FABRIC: AS PER CONSTRUCTION DOCUMENTS.

D. CLEARING AND GRUBBING
1. REMOVE ALL VEGETATION AND MATERIALS AS REQUIRED. REMOVE STUMPS COMPLETELY UNDER FOUNDATIONS AND ROADWAYS. DISPOSE OF CLEARING AND GRUBBING OFF-SITE OR IN AN ON-SITE LOCATION APPROVED BY CONSTRUCTION MANAGER.

E. STRIPPING
1. STRIP NOT LESS 3 INCHES OF SOD AND TOPSOIL FROM AREAS THAT WILL UNDERLAY GRAVEL, PAVEMENT, NEW STRUCTURES OR EMBANKMENTS. STOCKPILE STRIPPING ON-SITE FOR RE-USE AND FINAL LANDSCAPING.

G. EMBANKMENT
1. CONSTRUCT EMBANKMENT TO THE LINES AND GRADES SHOWN ON THE DRAWING.
2. CONSTRUCT EMBANKMENT FROM ON-SITE EXCAVATION MATERIAL WHEN SUITABLE. USE IMPORTED BACKFILL ONLY AFTER AVAILABLE ON-SITE EXCAVATION MATERIAL HAS BEEN USED.
3. CONSTRUCT IN LIFTS OF NOT MORE THAN 12 INCHES IN LOOSE DEPTH. THE FULL WIDTH OF THE CROSS SECTION SHALL BE BROUGHT UP UNIFORMLY.
4. MATERIAL SHALL BE PLACED IN LAYERS AND SHALL BE NEAR OPTIMUM MOISTURE CONTENT BEFORE ROLLING TO OBTAIN THE PRESCRIBED COMPACTION. WETTING OR DRYING OF THE MATERIAL AND MANIPULATION TO SECURE A UNIFORM MOISTURE CONTENT THROUGHOUT THE LAYERS MAY BE REQUIRED. SUCH OPERATIONS SHALL BE INCLUDED IN THE APPROPRIATE BID ITEM. SHOULD THE MATERIAL BE TOO WET TO PERMIT PROPER COMPACTION, IT IS THE CONTRACTOR'S RESPONSIBILITY TO UTILIZE MATERIAL WITH AN ACCEPTABLE MOISTURE CONTENT.
5. DO NOT PLACE FROZEN MATERIAL IN THE EMBANKMENT AND DO NOT PLACE EMBANKMENT MATERIAL UPON FROZEN MATERIAL.
6. CONTRACTOR SHALL BE RESPONSIBLE FOR THE STABILITY OF EMBANKMENTS AND THE REPLACEMENT OF ANY PORTION WHICH HAS BECOME DISPLACED DUE TO CONTRACTOR'S OPERATIONS.
7. START LAYERS IN THE DEEPEST PORTION OF THE FILL AND AS PLACEMENT PROGRESSES, CONSTRUCT LAYERS APPROXIMATELY PARALLEL TO THE FINISH GRADE LINE.
8. ROUTE EQUIPMENT BOTH LOADED AND EMPTY, OVER THE FULL WIDTH OF THE EMBANKMENT TO ENSURE UNIFORMITY OF MATERIAL PLACEMENT.
9. COMPACT EMBANKMENT UNDERLYING NEW GRAVEL PAVING, FLOOR SLABS AND STRUCTURES TO BE 95% COMPACTION AT A MINIMUM DRY DENSITY AS DETERMINED BY ASTM 0-1557 OR WITHIN PLUS OR MINUS 3% OF OPTIMUM MOISTURE CONTENT. COMPACT NON-STRUCTURAL AREA EMBANKMENTS TO A MINIMUM OF 90% OF ASTM 0-1557.

H. SITE GRADING
1. USING ON-SITE EXCAVATION MATERIAL, SHAPE, TRIM, FINISH AND COMPACT SURFACE AREAS TO CONFORM TO THE LINES. GRADES AND CROSS SECTIONS SHOWN ON THE DRAWING OR AS DESIGNATED BY THE CONSTRUCTION MANAGER.
2. GRADE SURFACES TO DRAIN AND ELIMINATE ANY PONDING OR EROSION.
3. ELIMINATE WHEEL RUTS BY REGRADING.
4. COMPACT AREAS OF UNDERLYING NEW GRAVEL, PAVING, FLOOR SLABS AND STRUCTURES TO BE AT 95% COMPACTION AT A MAXIMUM DRY DENSITY AS DETERMINED BY THE ASTM 0-1557 OR WITHIN PLUS OR MINUS 3% OF OPTIMUM MOISTURE CONTENT.
5. CONSTRUCT FINISH SURFACE OF SITE GRADING AREAS WITHIN 1 INCH FROM SPECIFIED GRADE.

I. SUBGRADE PREPARATION
1. SHAPE TOP OF SUBGRADE TO THE LINES AND GRADES SHOWN ON THE DRAWINGS.
2. MAINTAIN TOP OF SUBGRADE IN A FREE-DRAINING CONDITION.
3. DO NOT STOCK PILE MATERIAL ON TOP OF SUBGRADE UNLESS AUTHORIZED BY CONSTRUCTION MANAGER.
4. COMPACT THE TOP 12 INCHES OF SUBGRADE TO A 95% COMPACTION AT A MAXIMUM DRY DENSITY AS DETERMINED BY ASTM 0-1557 OR WITHIN PLUS OR MINUS 3% OF THE OPTIMUM MOISTURE CONTENT.
5. CONSTRUCT TOP OF SUBGRADE WITHIN 1 INCH OF ESTABLISHED GRADE AND CROSS SECTION.

J. GEOTEXTILE FABRIC
1. LAY GEOTEXTILE FABRIC OVER COMPACTED SUBGRADE IN THE COMPOUND AREA AND UNDER LENGTH OF ROAD (WHEN REQUIRED). LAP ALL JOINTS TO A MINIMUM OF 36 INCHES.

K. GRAVEL SURFACING
1. CONSTRUCT GRAVEL SURFACING AREAS USING CRUSHED AGGREGATE BASE AND FINISH COURSES AS SPECIFIED BY CONSTRUCTION MANAGER. SPREAD GRAVEL AND RAKE TO OBTAIN A UNIFORM SURFACE AREA.

L. LANDSCAPING
1. FURNISH, INSTALL AND MAINTAIN LANDSCAPE WORK AS SHOWN AND/OR REQUIRED WITHIN THE CONSTRUCTION DOCUMENTS OR AS SPECIFIED IN THE CONSTRUCTION SPECIFICATIONS.

M. CONCRETE FORM WORK
1. FORMS: SMOOTH AND FREE OF SURFACE IRREGULARITIES. UTILIZE FORM RELEASE AGENTS.
2. CHAMFER EXPOSED EDGES OF ALL TOWER FOUNDATION SHALL RECEIVE A $\frac{3}{4}$ INCH BY $\frac{3}{4}$ INCH 45 DEGREE CHAMFER. OTHER EXPOSED EDGES SHALL RECEIVE A TOOLED RADIUS FINISH.
3. UPON COMPLETION, REMOVE ALL FORMS INCLUDING THOSE CONCEALED OR BURIED.
4. REFER TO STRUCTURAL DRAWINGS FOR ADDITIONAL REQUIREMENTS.

4. GENERAL NOTES

1. IT IS THE CONTRACTOR'S RESPONSIBILITY TO EXAMINE ALL PLAN SHEETS AND SPECIFICATIONS AND COORDINATE HIS WORK WITH THE WORK OF ALL OTHER CONTRACTORS TO ENSURE THAT WORK PROGRESSION IS NOT INTERRUPTED.
2. THE CONTRACTOR IS RESPONSIBLE FOR MAINTAINING A NEAT AND ORDERLY SITE, YARD AND GROUNDS. CONTRACTOR SHALL REMOVE AND DISPOSE OFF SITE ALL RUBBISH, WASTE MATERIAL, LITTER AND ALL FOREIGN SUBSTANCES. REMOVE PETROCHEMICAL SPILLS, STAINS AND OTHER FOREIGN DEPOSITS. RAKE GROUND TO A SMOOTH EVEN-TEXTURED SURFACE.
3. THE PLANS SHOW SOME KNOWN SUBSURFACE STRUCTURE ABOVE GROUND STRUCTURES AND/OR UTILITIES BELIEVED TO EXIST IN THE WORKING AREA, EXACT LOCATION OF WHICH MAY VARY FROM THE LOCATION INDICATED. IN PARTICULAR THE CONTRACTOR IS WARNED THAT THE EXACT OR EVEN APPROXIMATE LOCATION OF SUCH PIPELINES, SUBSURFACE STRUCTURES AND/OR UTILITIES IN THE AREA MAY BE SHOWN OR MAY NOT BE SHOWN AND IT SHALL BE HIS RESPONSIBILITY TO PROCEED WITH GREAT CARE IN 48 HOURS BEFORE YOU DIG, DRILL OR BLAST CALL LOCAL UTILITIES LOCATOR COMPANY.
4. THE OWNER OR OWNER'S REPRESENTATIVE SHALL BE NOTIFIED IN WRITING OF ANY CONDITIONS THAT VARY FROM THOSE SHOWN ON THE PLANS. THE CONTRACTOR'S WORK SHALL NOT VARY FROM THE PLANS WITHOUT THE EXPRESSED APPROVAL OF THE OWNER OR THE OWNER'S REPRESENTATIVE.
5. THE CONTRACTOR IS INSTRUCTED TO COOPERATE WITH ANY AND ALL OTHER CONTRACTORS PERFORMING WORK ON THE SITE DURING THE PERFORMANCE OF THIS CONTRACT.
6. THE CONTRACTOR SHALL RESTORE ALL DAMAGED, PUBLIC OR PRIVATE PROPERTY TO AT LEAST AS GOOD OF CONDITION AS BEFORE DISTURBED AS DETERMINED BY THE OWNER OR OWNER'S REPRESENTATIVE.
7. THE CONTRACTOR SHALL COMPLY WITH ALL REQUIRED PERMITS.
8. THE CONTRACTOR SHALL PROTECT EXISTING PROPERTY LINE MONUMENTATION. ANY MONUMENTATION DISTURBED OR DESTROYED, AS JUDGED BY THE OWNER OR OWNER'S REPRESENTATIVE, SHALL BE REPLACED.
9 ALL TRENCH EXCAVATION AND ANY REQUIRED SHEETING AND SHORING SHALL BE DONE IN ACCORDANCE WITH OSHA REGULATIONS FOR CONSTRUCTION.
10.CONTRACTOR SHALL BE RESPONSIBLE FOR DEWATERING AND THE MAINTENANCE OF SURFACE DRAINAGE DURING THE COURSE OF WORK.
11ALL UTILITY WORK INVOLVING CONNECTIONS TO EXISTING SYSTEMS SHALL BE COORDINATED WITH THE OWNER OR OWNER'S REPRESENTATIVE BEFORE EACH AND EVERY CONNECTION TO EXISTING SYSTEMS IS MADE.
12MAINTAIN FLOW FOR ALL EXISTING UTILITIES
13ALL SITE FILL SHALL MEET SELECTED FILL STANDARDS AS DEFINED BY THE OWNER OF OWNER'S REPRESENTATIVE ON THE DRAWINGS OR GEOTECHNICAL REPORT RECOMMENDATIONS.
14CONTRACTOR TO GRADE ALL AREAS OF THE SITE TO PROVIDE POSITIVE DRAINAGE AWAY FROM THE BUILDING OR EQUIPMENT PAD AND THE TOWER.
15IF NECESSARY, THE CONTRACTOR IS RESPONSIBLE FOR REPAIRING AND REGRADING ROADWAY AND ANY DISTURBED AREAS FOLLOWING INSTALLATION OF UTILITIES.
16NO COMMERCIAL MESSAGES TO BE DISPLAYED ON TOWER
17WATER AND SEWER SERVICES ARE NOT REQUIRED FOR THE DEVELOPMENT
18THE CONTRACTOR SHALL FURNISH AND INSTALL ALL MATERIAL UNLESS OTHERWISE NOTED.
19ELECTRICAL DRAWINGS HAVE BEEN REVIEWED AND SEALED FOR STRUCTURAL PURPOSES ONLY.

AT&T

smartlink

Trylon

DRAWING SCALES ARE INTENDED FOR 11"x17" SIZE PRINTED MEDIA ONLY.

SUBMITTALS

REV	DATE	DESCRIPTION	BY
0	08/05/22	100% FCD	TFL
1	08/26/22	100% FCD	VP
2	03/30/23	100% FCD	TFL
3	04/11/23	100% FCD	RC
4	04/21/23	100% FCD	RC
5	05/05/23	100% FCD	RC

STATE OF MARYLAND
MATTHEW K. JAMES
44680
PROFESSIONAL ENGINEER

PROFESSIONAL CERTIFICATE
I HEREBY CERTIFY THAT THESE DOCUMENTS WERE PREPARED OR APPROVED BY ME, AND THAT I AM A DULY LICENSED PROFESSIONAL ENGINEER UNDER THE LAWS OF THE STATE OF MARYLAND, LICENSE NO. 44680, EXPIRATION DATE 12/10/2023

PROJECT TITLE

USID: 3897
FA#: 10072516

RADNOR RD

5601 GOLDSBORO ROAD
BETHESDA, MD 20817

EXISTING SELF SUPPORT TOWER

SHEET DESCRIPTION

GENERAL NOTES

SHEET NO.

GN-1