980 YAGI ANTENNAS SERIES — 746-960 MHz

980 Yagi Antennas Series

The 980 Yagi Antenna Series are available in 2, 3, 7, 12 element configurations. All our antennas can be completely customized to your particular applications. Our antennas can be black anodized, vertically or horizontally polarized.

- Each antenna has a rugged design to withstand harsh environmental conditions.
- The mounting hardware supplied will permit either vertical or horizontal polarization.
- All 980 Series Yagi antennas are fully welded.



Electrical Specifications	982-70	983-70	980-70	987-70
Frequency Range, MHz (in splits)	900-930	746-960	746-960	746-960
Nominal Gain, dBd	3.5	6.5	10.0	12.0
Number of Elements	2	3	7	12
Bandwidth 1.5:1 VSWR, MHz (Ctr. Freq. %)	30	85	85	85
Polarization	Vertical or Horizontal			
Horizontal Beamwidth (Horizontal Pol.)	128º	99º	56º	41º
Vertical Beamwidth (Horizontal Pol.)	66º	60º	42º	38º
Front to Back, dB	9	16	20	20
Pattern	Directional			
Power Rating, Watts	200	200	200	200
Nominal Impedance, Ohms	50	50	50	50
Standard Termination	Type N Male			
Mechanical Specifications	**982-70**	**983-70**	**980-70**	**987-70**
Length, in (mm)	11 (280)	13 (330)	27 (686)	41 (1041)
Width, in (mm)	6.5 (165)	8 (203)	8 (203)	8 (203)
Weight, lbs. (kg)	1.7 (0.76)	1.8 (0.82)	2.5 (1.1)	3 (1.4)
Rated Wind Velocity, No Ice, mph (km/h)	160 (257)	160 (257)	150 (241)	140 (225)
Rated Wind Velocity, 0.5” (13mm) ice, mph (km/h)	120 (193)	120 (193)	110 (177)	100 (161)
Lateral Thrust @ 100 mph, wind, lbs.(kg)	2.6 (1.2)	2.8 (1.3)	7 (3.2)	11 (5.0)
Projected Area, ft² (m²)	0.10	0.13	0.26	0.41
Mounting Hardware Included	127-85 Clamp			

COMPROD Simplifying RF Solutions

sales@comprodcom.com | comprodcom.com
US 1.877.825.2007 / CAN 1.800.603.1454
FAX 1.800.554.1033

980 YAGI ANTENNAS SERIES 746-960 MHz

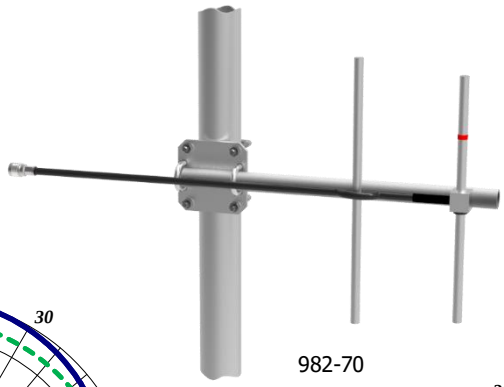

982-70

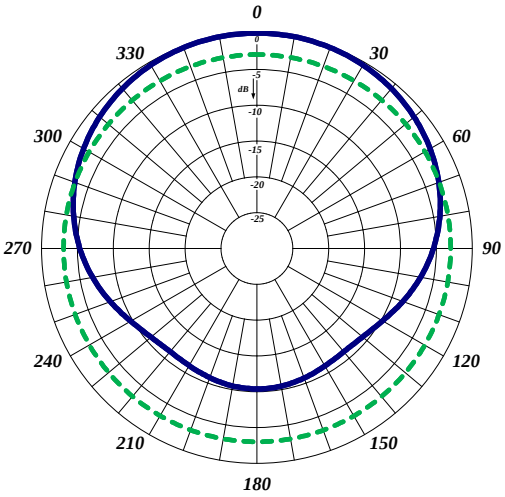

982-70, Horizontal Pattern (Vertical Polarization)

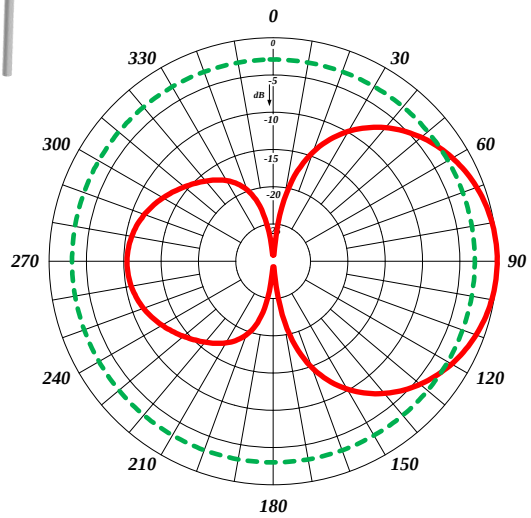

982-70, Vertical Pattern (Vertical Polarization)

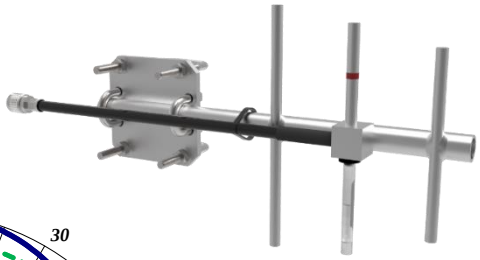

983-70

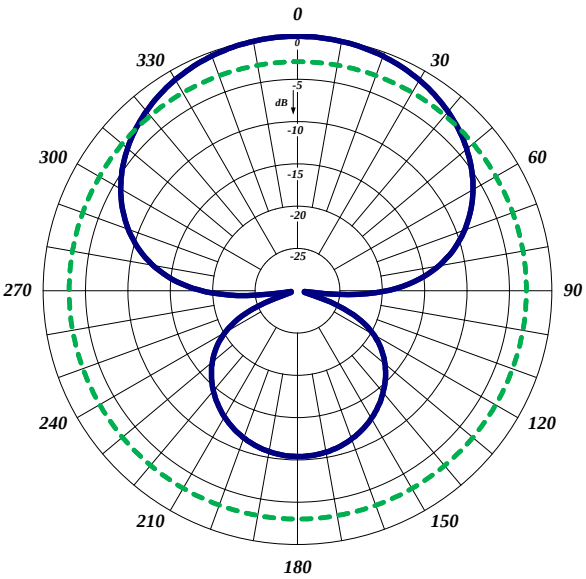

983-70, Horizontal Pattern (Vertical Polarization)

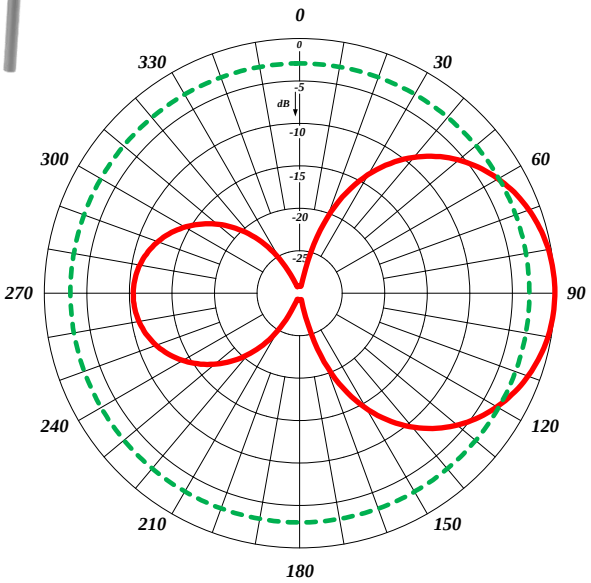

983-70, Vertical Pattern (Vertical Polarization)

COMPROD Simplifying RF Solutions

sales@comprodcom.com | comprodcom.com

☎ US 1.877.825.2007 / CAN 1.800.603.1454

FAX 1.800.554.1033

980 YAGI ANTENNAS SERIES — 746-960 MHz

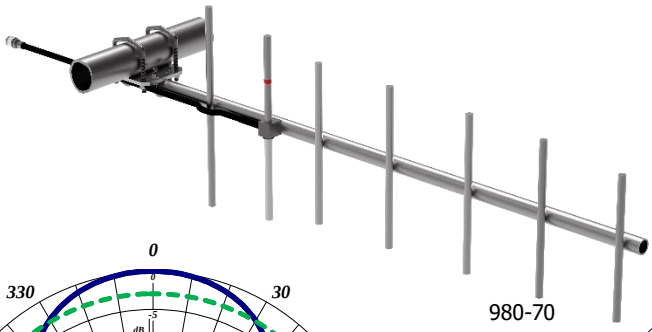

980-70

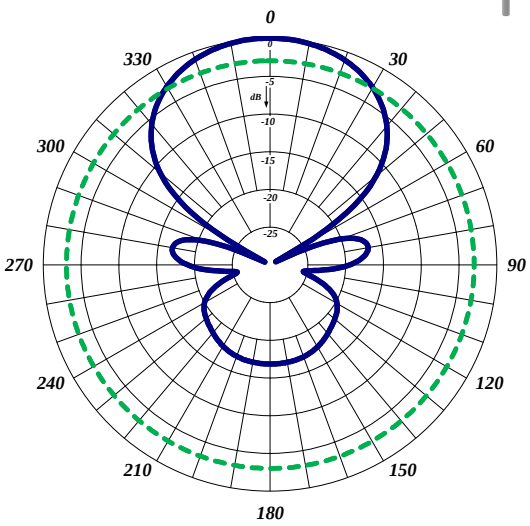

980-70, Horizontal Pattern (Vertical Polarization)

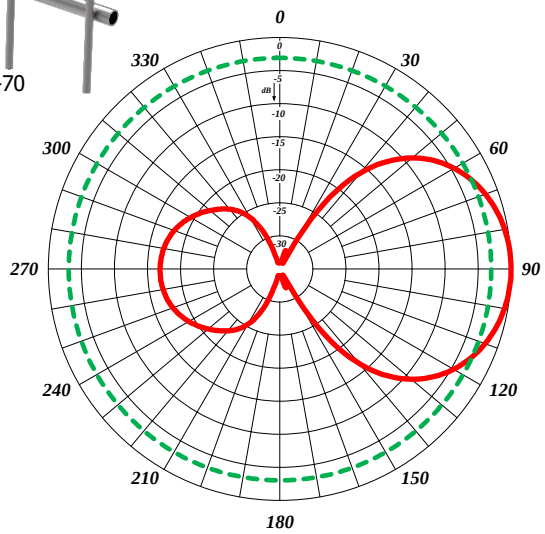

980-70, Vertical Pattern (Vertical Polarization)

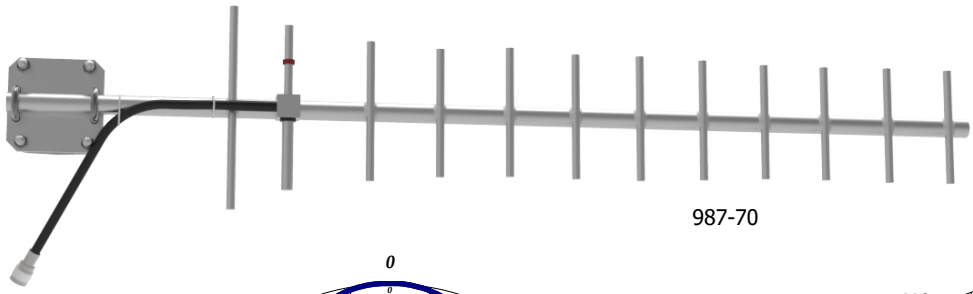

987-70

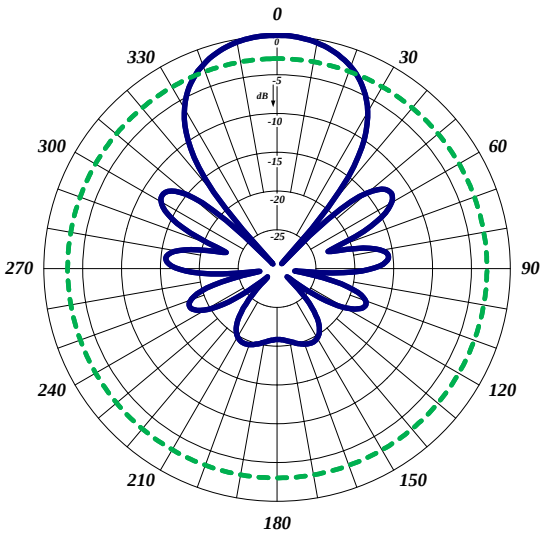

987-70, Horizontal Pattern (Vertical Polarization)

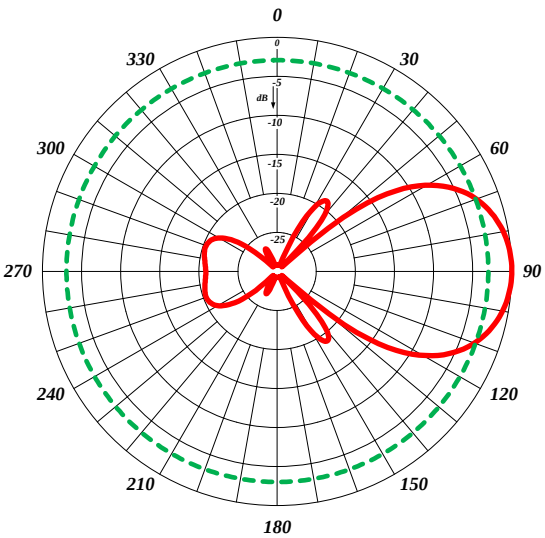

987-70, Vertical Pattern (Vertical Polarization)

COMPROD Simplifying RF Solutions

sales@comprodcom.com | comprodcom.com
☎ US 1.877.825.2007 / CAN 1.800.603.1454
FAX 1.800.554.1033