- NOTES -

1. MATERIAL: LOW CARBON STEEL.
2. FINISH: HOT DIP GALVANIZE PER ASTM A153.
3. STRENGTH AND DIMENSIONS PER ANSI/IEEE C135.4
   INCLUDING THE FOLLOWING:
   - MINIMUM TENSILE STRENGTH OF 13,550 LBS
   - OVALEYE BOLT TO MEET THE 180° BEND TEST.

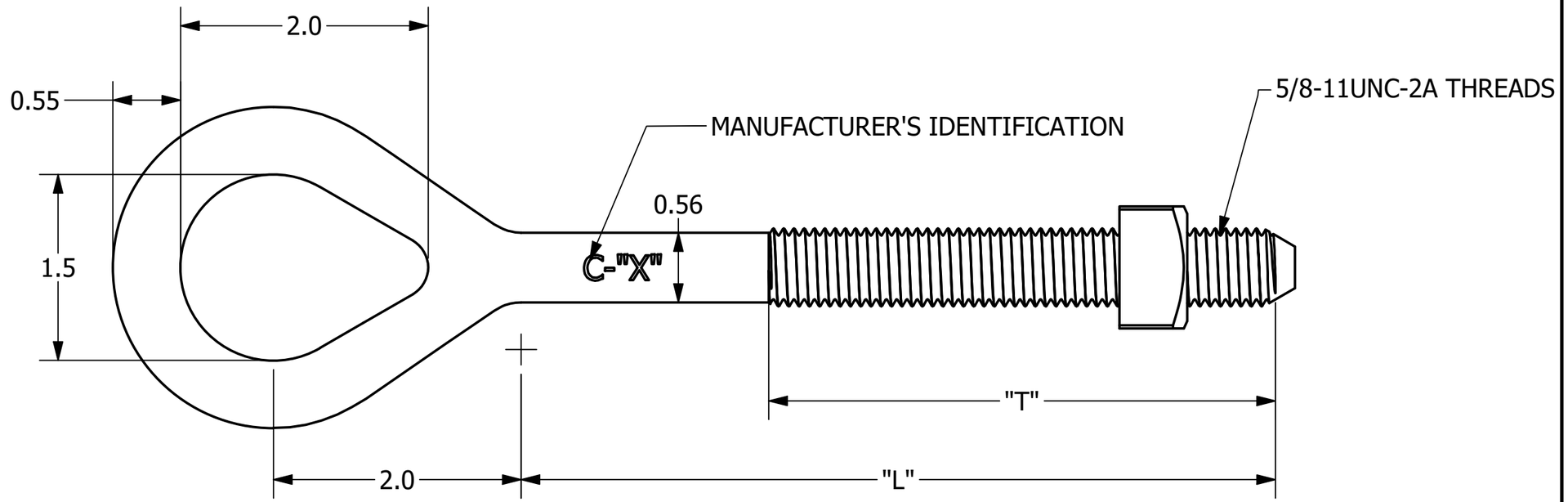

CATALOG NUMBER	"L"	"T"
29956	6	4
29958	8	4
29959	9	4
29960	10	6
29962	12	6
29964	14	6
29966	16	6
29968	18	6
29970	20	6
29972	22	6
29974	24	6
2997026	26	6
2997028	28	6
2997030	30	6

CHANCE®

CONFIDENTIAL: THIS DRAWING AND ITS CONTENTS ARE CONFIDENTIAL AND THE EXCLUSIVE PROPERTY OF HUBBELL POWER SYSTEMS. NO PUBLICATION, DISTRIBUTION, OR COPIES MAY BE MADE WITHOUT THE WRITTEN CONSENT OF HUBBELL POWER SYSTEMS. HUBBELL POWER SYSTEMS UNPUBLISHED ALL RIGHTS RESERVED UNDER THE COPYRIGHT LAWS.

HUBBELL® POWER SYSTEMS, INC.

HUBBELL POWER SYSTEMS, INC.

TITLE

5/8"
OVALEYE BOLT

SIZE	CAT / PART / ASSY NO.	DWG NO.	REV
B	SEE TABLE	SA29956	G

DO NOT SCALE THIS DRAWING	DRN BY TOLIVER	DATE 11/25/20	SHEET 1 OF 1