# WaveTrax®

Ordering Guide

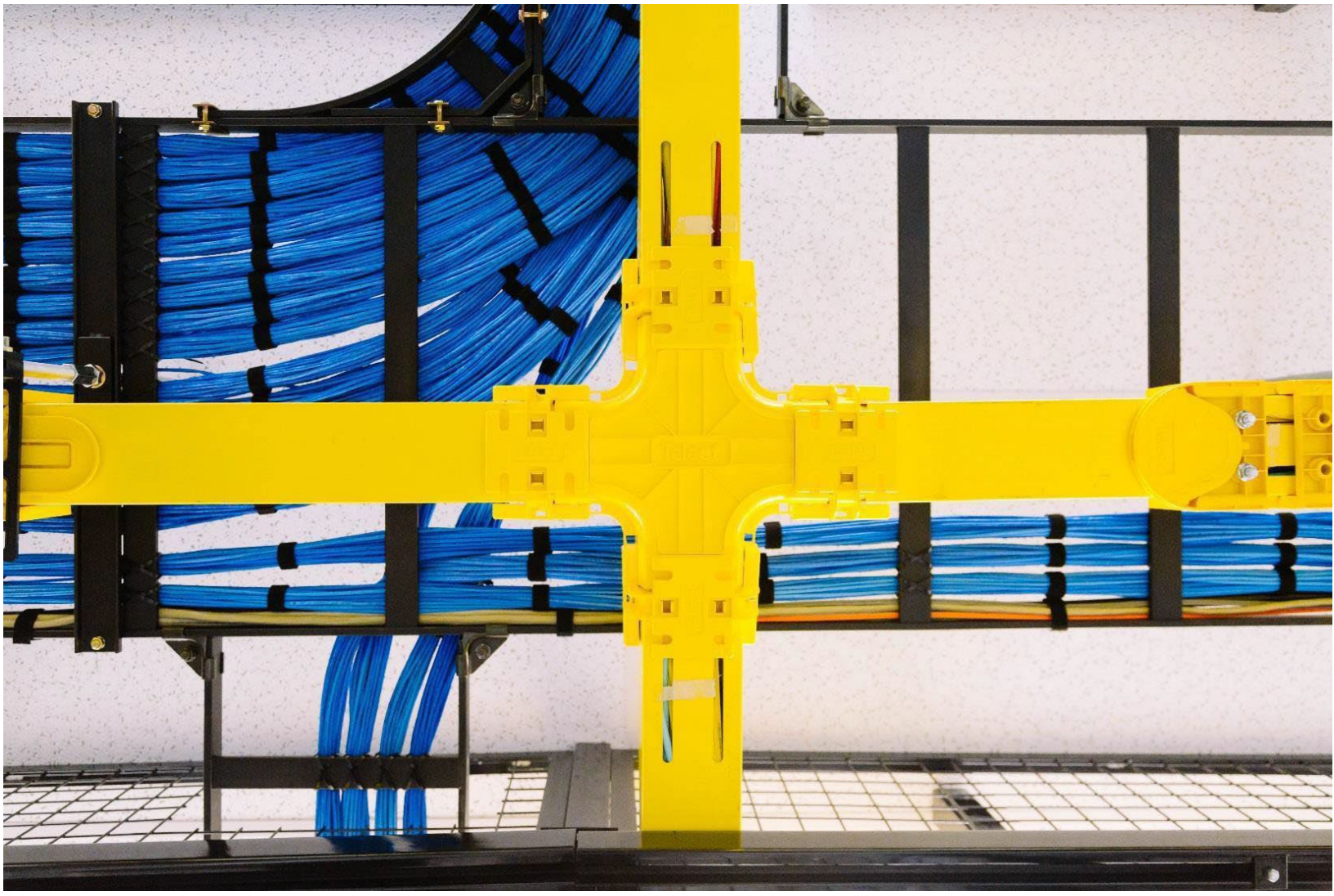

Amphenol

NETWORK SOLUTIONS

## Table of Contents

**Section 1: Overview** ..... **4**
1.1 Key Benefits ..... 4
1.2 Custom-Configured Solutions ..... 4
1.3 Components ..... 5
Troughs ..... 5
Express T ..... 5
Coupler ..... 5
Express Off-Ramp ..... 5
Cablelinks ..... 5
**Section 2: Part Callouts** ..... **6**
2.1 WaveTrax System ..... 7
2.2 Vertical Fiber Management Solutions ..... 8
4" Center Drop to Single Flexible Tube to Slotted Duct ..... 8
**Section 3: Straight Sections** ..... **9**
Part Numbers ..... 9
Troughs ..... 9
Trough Covers ..... 9
Trough Accessories ..... 9
**Section 4: Transitional Sections** ..... **10**
Part Numbers ..... 10
Horizontal T ..... 10
Horizontal T Cover ..... 10
Horizontal Intersection ..... 10
Horizontal Intersection Cover ..... 10
90-Degree Horizontal Elbow ..... 11
90-Degree Horizontal Elbow Cover ..... 11
FastLock Coupler ..... 11
Competitive FastLock Coupler ..... 11
Reducers ..... 12
Reducer Covers ..... 12
45-Degree Horizontal Elbow ..... 12
45-Degree Up Elbow ..... 12
45-Degree Down Elbow ..... 13
45-Degree Down Elbow Cover ..... 13
90-Degree Up Elbow ..... 13
90-Degree Up Elbow Cover ..... 13
90-Degree Down Elbow ..... 14
90-Degree Down Elbow Cover ..... 14
End Cap ..... 14
End Cap Connector ..... 14
**Section 5: Drop Sections** ..... **15**
Part Numbers ..... 15
Center Drop ..... 15
Center Drop Cover ..... 15
Trumpet ..... 15
Flexible Tubing ..... 15
2" Flexible Tube Adapter ..... 16
4" Flexible Tube Adapter ..... 16
4" Flexible Tube Adapter Cover ..... 16
Slotted Duct ..... 16



Amphenol Network Solutions
All rights reserved. 09.16.26 v.35
509.926.6000 — amphenol-ns.com

Drop Kit with Off-Ramp and FlexTrax ..... 16

**Section 6: WaveTrax Express™ ..... 17**
Part Numbers ..... 17
Express Off-Ramp with Express Bracket ..... 17
Express Off-Ramp for CommScope's FiberGuide® and Panduit's FiberRunner® Trough ..... 17
Express Off-Ramp Cover ..... 18
Express T ..... 18
Express T Cover ..... 18
**Section 7: Cablelinks ..... 19**
Part Numbers ..... 19
Cablelinks ..... 19
WaveTrax Adapter to Cablelinks ..... 19
Cablelinks to WaveTrax Trough Adapter ..... 19
**Section 8: Mounting Brackets ..... 20**
Part Numbers ..... 20
Support Bracket for $^{5}/_{8}$" Threaded Rod ..... 20
Trapeze Bracket ..... 20
Variable Support Kit ..... 20
Universal Support Bracket ..... 20
Center Support Bracket ..... 20
C-Bracket ..... 21
Adjustable Bracket ..... 21
Cable Rack Bracket ..... 21
Trough Support Clamp (Mighty Clamp) ..... 21
$^{5}/_{8}$" Threaded Rod Kit ..... 21
Clamshell Bracket Kit ..... 22
Mounting Bracket Hardware Kits ..... 22
**Section 9: Application Standards ..... 22**
**Section 10: FlexTrax® ..... 23**
Part Numbers ..... 23
FlexTrax ..... 23
Accessories ..... 23



Amphenol Network Solutions
All rights reserved. 09.16.26 v.35
509.926.6000 — amphenol-ns.com

# Section 1: Overview

WaveTrax by Amphenol Network Solutions is an overhead fiber cable management system designed for rapid assembly and installation. The WaveTrax raceway solution is designed to manage, route and protect fiber cables horizontally and vertically throughout an entire network. Its architecture is simple, seamless and flexible, enabling complete configurability of the cable-management solution.

The WaveTrax cable raceway solution reduces your total cost of ownership by saving contracted time on installation and retrofits. Installers interviewed by Amphenol Network Solutions reveal that WaveTrax reduces time and cost on installations by 50 percent and on retrofits by 60 percent.

Supported by our renowned customer service, WaveTrax has a full line of components, including troughs, off-ramps, couplers, articulating links and accessories.



## 1.1 Key Benefits

- Full line of simple, intuitive components, including troughs, elbows, cross and T fittings, off-ramps and articulating links; all in various standard sizes
- Uncomplicated configuration and support
- Lowers total cost of ownership: competitive pricing, easier to install, more configurable and adaptable than the competition
- Custom-configured solutions designed by Amphenol Network Solutions' engineers
- Snap-together system that requires few tools
- Directional fittings meet most network configurations
- Other system adapters allow improvements to installed raceway systems
- Most components available in two-inch, four-inch, six-inch and 12-inch sizes

## 1.2 Custom-Configured Solutions

Amphenol Network Solutions understands every network facility is different and so is each cable-management solution. Our engineering team is available to develop a WaveTrax solution that's custom designed for an individual central office or data center.

Included in the cost of a WaveTrax buildout, Amphenol Network Solutions provides the service to any size of application, from small cell huts to large COs.

Network technicians send our engineers their required configuration and we respond with drawings of an overhead layout and a full inventory of the materials required.



Amphenol Network Solutions
All rights reserved. 09.16.26 v.35
509.926.6000 — amphenol-ns.com

## 1.3 Components

### Troughs

The WaveTrax trough is rigid and durable. It comes in standard six-foot lengths and can be easily cut to fit your network application.



### Coupler

The FastLock coupler rigidly and smoothly connects multiple components together. Its snap on design makes connections quick and easy, reducing installation time.



### Cablelinks

Snap-together links articulate to 22.5 degrees, allowing a right-angle turn in only four links. Cablelinks are ideal for negotiating horizontal and vertical runs in tight areas and around obstacles.



### Express T

The Express T interchange transitions to a new horizontal run anywhere on an existing trough.



### Express Off-Ramp

The Express Off-Ramp gives you a modular exit on the side of an existing 2-, 4-, 6-,12-, or 24-inch trough run. No cutting or notching required.





Amphenol Network Solutions
All rights reserved. 09.16.26 v.35
509.926.6000 — amphenol-ns.com

# Section 2: Part Callouts

The following diagram shows the components available in the WaveTrax system. Any one system will not typically use every component. This example shows a six-inch-wide system; WaveTrax is available in 2-inch, 4-inch, 6-inch, 12-inch, and 24-inch widths, along with reducers to transition to smaller troughs.

Cablelinks articulating troughs are available in two-inch, four-inch and six-inch widths. All components are four inches high, except for two-inch widths, which are two inches high.

**Parts List**

1. Six-Foot Trough
2. Reducer
3. Trumpet Attachment
4. End Cap
5. Flexible Tube
6. T-Transition
7. Slotted Duct
8. Express Off-Ramp
9. Cablelinks (2")
10. Center Drop
11. Competitive System Adapter
12. Intersection
13. Drop Attachment
14. 45° Elbow
15. Coupling Kit
16. L-Transition
17. Upsweep
18. Downsweep
19. Cablelinks Adapter
20. Cablelinks

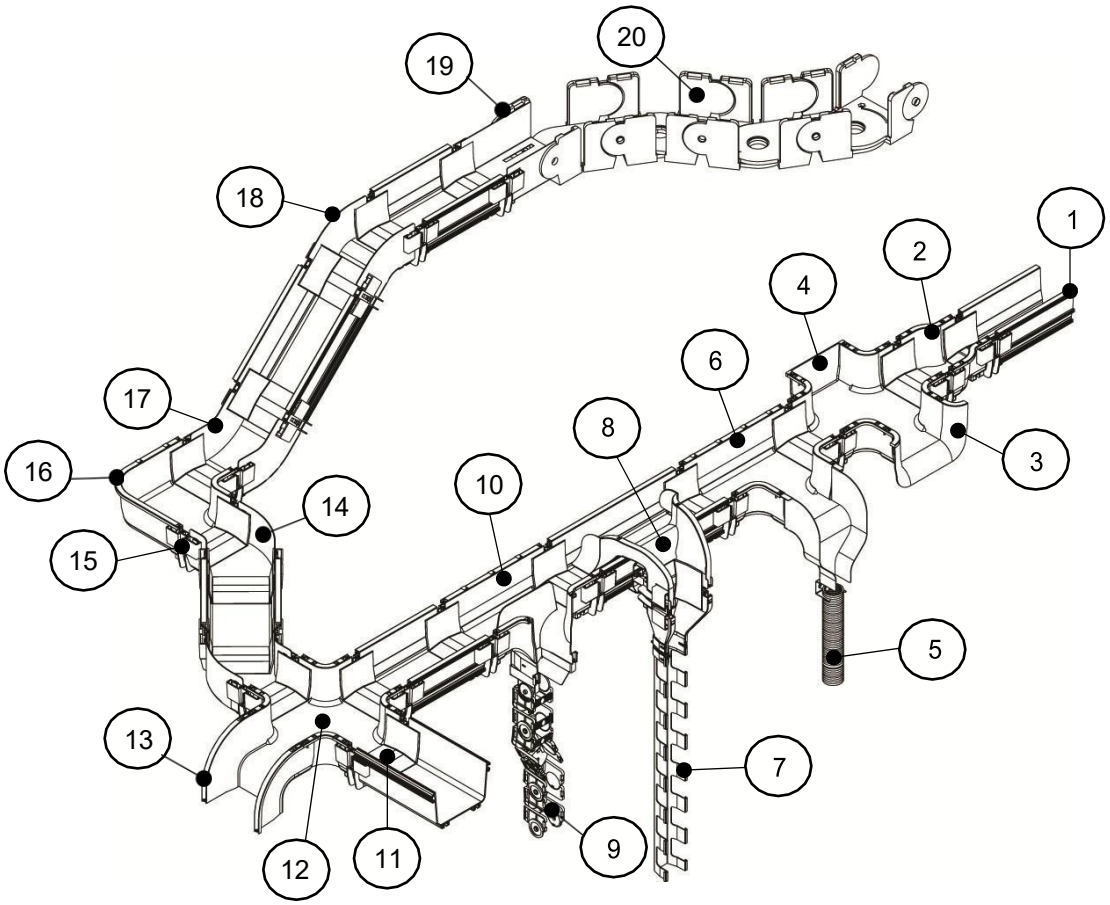



All rights reserved. 09.16.26 v.35

## 2.1 WaveTrax System

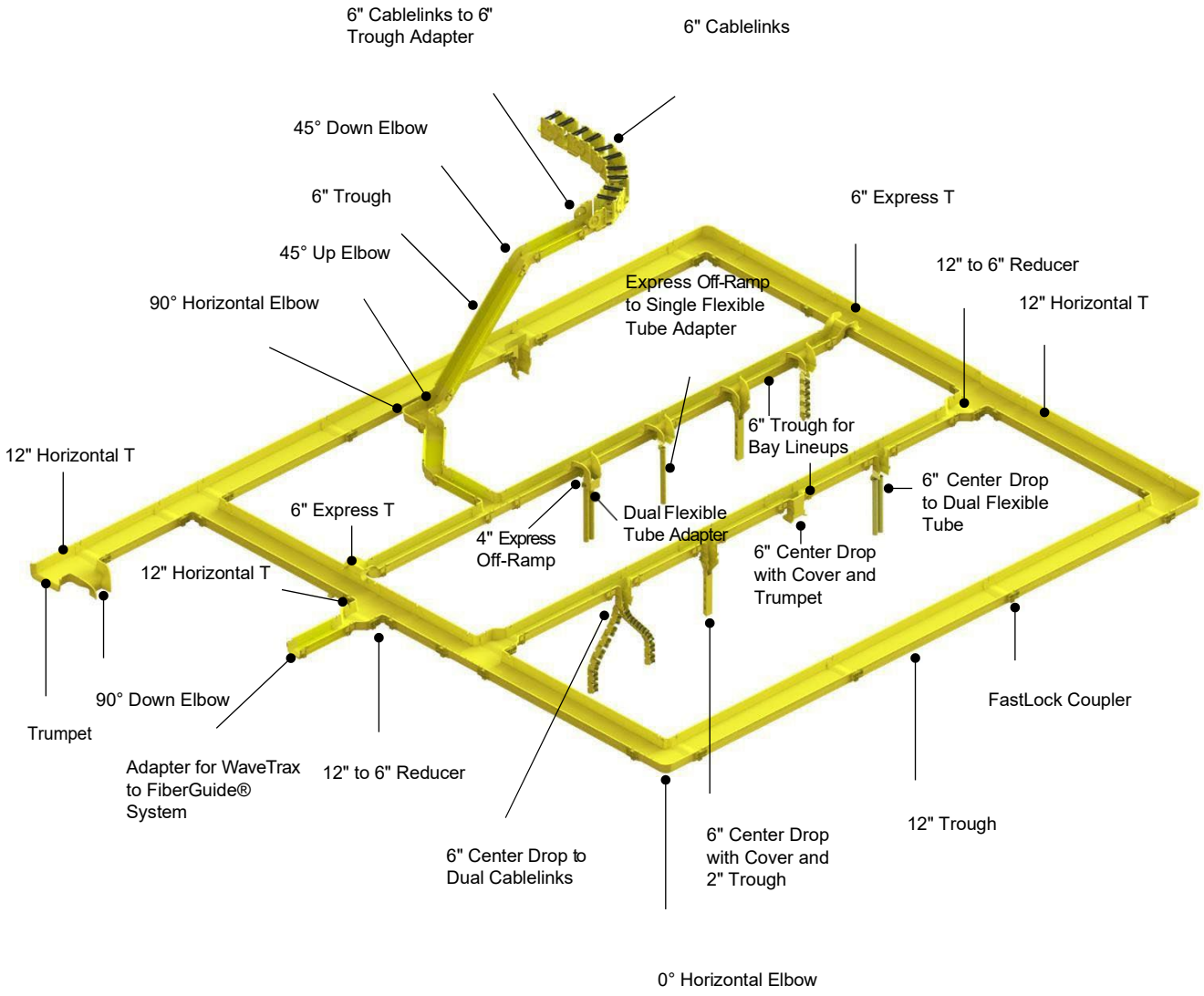


FiberGuide® is a registered trademark of CommScope Technologies LLC.
FiberRunner® is a registered trademark of Panduit Corp.

## 2.2 Vertical Fiber Management Solutions

### 4" Center Drop to Single Flexible Tube to Slotted Duct

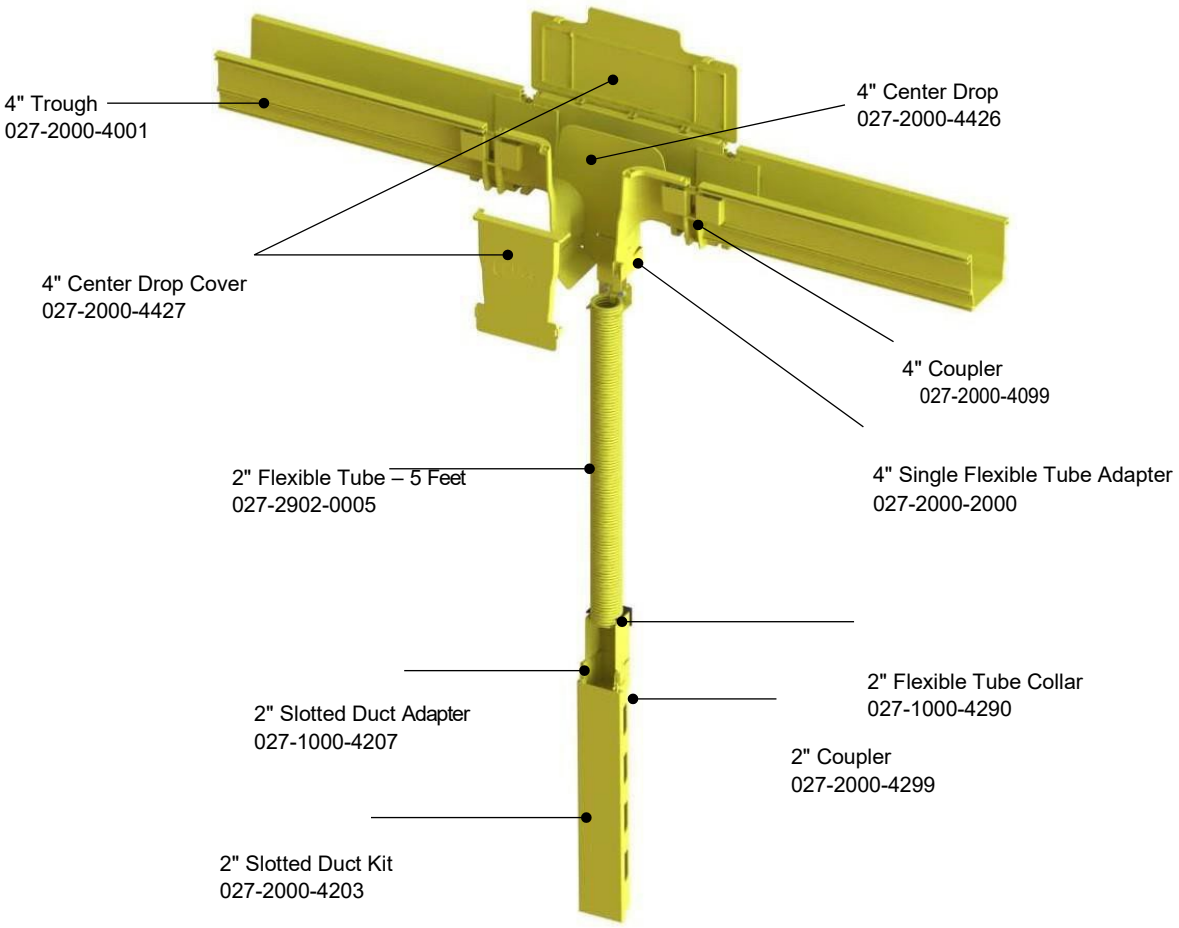

# Section 3: Straight Sections

WaveTrax trough is the primary carrier of your fiber-optic cable. Troughs come in six-foot lengths and can support up to 175 lbs. (79.5 kg) of fiber per section. Each section can be cut to size and should be supported by a bracket at the coupler you attach at either end. You can also add mid-span support using a sliding bracket on a standard bracket. WaveTrax trough covers can be added for more protection of your fiber optic cable. Trough covers require no hardware to attach to the trough and have a hinge for ease of access.

## Part Numbers

### Troughs

| Part | Description |
|---|---|
| 027-2000-4206 | 2" W x 2" H Trough |
| 027-2000-4001 | 4" W x 4" H Trough |
| 027-2000-6401 | 6" W x 4" H Trough – 6’ length |
| 027-2000-64010 | 6" W x 4" H Trough – 10’ length |
| 027-2000-12406 | 12" W x 4" H Trough - 6’ length |
| 027-2000-124010 | 12”W x 4” H Trough – 10’ length |
| 027-2000-12SLK | 12”W x 4” H Trough with Spools |
| 027-2000-24406 | 24”W x 4” H Trough – 6’ length |
| 027-2000-244010 | 24”W x 4” H Trough – 10’ length |
| 027-2000-24SLK | 24”W x 4” H Trough with Spools |



### Trough Covers

| Part | Description |
|---|---|
| 027-2000-4202 | 2" Trough Width |
| 027-2000-4002 | 4" Trough Width |
| 027-2000-6402 | 6" Trough Width |
| 027-2000-12402 | 12" Trough Width |



### Trough Accessories

| Part | Description |
|---|---|
| 027-2000-1101 | Trough Notching Tool* |

** Required for new builds if you do not currently have a trough notching tool*





Amphenol Network Solutions
All rights reserved. 09.16.26 v.35
509.926.6000 — amphenol-ns.com

# Section 4: Transitional Sections

WaveTrax transitions are any part that adds to the path of a trough. These parts include T-transitions, L-transitions, intersections and interchanges. With multiple transition options, WaveTrax allows fiber to maneuver specifically to your fiber and network needs. All transitions attach to a trough with a FastLock Coupler. Every transition has two locking pins and teeth that allow the FastLock Coupler to snap on quickly and securely.

If you have a system in place other than WaveTrax, we have Express T, Express Off-Ramp, and adapters that can connect any other system to our WaveTrax system

## Part Numbers

### Horizontal T

| Part | Description |
|---|---|
| 027-2000-4210 | 2" Trough Width |
| 027-2000-4010 | 4" Trough Width |
| 027-2000-6410 | 6" Trough Width |
| 027-2000-12410 | 12" Trough Width |
| 027-2000-12410-S | 12” Trough Width, with Spool |
| 027-2000-24410 | 24” Trough Width |
| 027-2000-24112 | 24” Trough Width, 12” Exits |



### Horizontal T Cover

| Part | Description |
|---|---|
| 027-2000-4211 | 2" Width |
| 027-2000-4011 | 4" Width |
| 027-2000-6411 | 6" Width |
| 027-2000-12411 | 12" Width |



### Horizontal Intersection

| Part | Description |
|---|---|
| 027-2000-4230 | 2" Width |
| 027-2000-4030 | 4" Width |
| 027-2000-6430 | 6" Width |
| 027-2000-12430 | 12" Width |
| 027-2000-12452 | 12” Width with 6” Exits |
| 027-2000-24430 | 24” Width |
| 027-2000-24212 | 24” Width with 12” Exits |



### Horizontal Intersection Cover

| Part | Description |
|---|---|
| 027-2000-4231 | 2" Width |
| 027-2000-4031 | 4" Width |
| 027-2000-6431 | 6" Width |
| 027-2000-12431 | 12" Width |



CE

**W00104102026**



Amphenol Network Solutions
All rights reserved. 09.16.26 v.35
509.926.6000 — amphenol-ns.com

### 90-Degree Horizontal Elbow

| Part | Description |
|---|---|
| 027-2000-4224 | 2" Width |
| 027-2000-4024 | 4" Width |
| 027-2000-6424 | 6" Width |
| 027-2000-12424 | 12" Width |



### 90-Degree Horizontal Elbow Cover

| Part | Description |
|---|---|
| 027-2000-4225 | 2" Width |
| 027-2000-4025 | 4" Width |
| 027-2000-6425 | 6" Width |
| 027-2000-12425 | 12" Width |



### FastLock Coupler

| Part | Description |
|---|---|
| 027-2000-4299 | 2" Width |
| 027-2000-4099 | 4" Width |
| 027-2000-6499 | 6" Width |
| 027-2000-12499 | 12" Width |
| 027-2000-24499 | 24” Width |



### WaveTrax Adapter for CommScope’s FiberGuide® Fiber Management System

| Part | Description |
|---|---|
| 027-1000-4279 | 2" WaveTrax Trough to FiberGuide Trough Adapter |
| 027-2000-4007 | 4" WaveTrax Trough to FiberGuide Trough Adapter |
| 027-2000-6407 | 6" WaveTrax Trough to FiberGuide Trough Adapter |
| 027-C2000-12007 | 12" WaveTrax Trough to FiberGuide Trough Adapter |
| 027-C2000-24407 | 24” WaveTrax Trough to FiberGuide Trough Adapter |

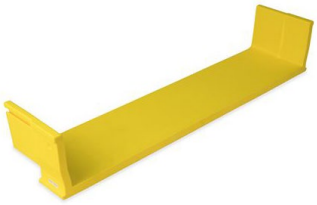

*Note: A FastLock Coupler is needed along with the adapter to mate with a CommScope trough*

### Adapter for Panduit’s FiberRunner® Fiber Management System

| Part | Description |
|---|---|
| 027-C1000-4008 | 4" WaveTrax Trough to FiberRunner Trough Adapter |
| 027-C1000-6008 | 6” WaveTrax Trough to FiberRunner Trough Adapter |
| 027-C1000-12407 | 12” WaveTrax Trough to FiberRunner Trough Adapter |
| 027-C2000-24007 | 24” WaveTrax Trough to FiberRunner Trough Adapter |





Amphenol Network Solutions
All rights reserved. 09.16.26 v.35
509.926.6000 — amphenol-ns.com

## Reducers

| Part | Description |
|---|---|
| 027-2000-4050 | 4" to 2" Width |
| 027-2000-6450 | 6" to 4" Width |
| 027-2000-12450 | 12" to 6" Width |
| 027-2000-24450 | 24” to 12” Width |



## Reducer Covers

| Part | Description |
|---|---|
| 027-2000-4051 | 4" to 2" Width |
| 027-2000-6451 | 6" to 4" Width |
| 027-2000-12451 | 12" to 6" Width |

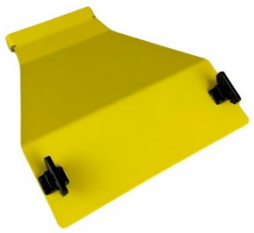

## Reducer Kit

| Part | Description |
|---|---|
| 027-2000-4052 | 4" to 2" Width |



## 45-Degree Horizontal Elbow

| Part | Description |
|---|---|
| 027-1000-4289 | 2" Width |
| 027-1000-4489 | 4" Width |
| 027-1000-6489 | 6" Width |
| 027-1000-12489 | 12" Width |
| 027-2000-24424 | 24” Width |



## 45-Degree Up Elbow

| Part | Description |
|---|---|
| 027-1000-4287 | 2" Width |
| 027-1000-4487 | 4" Width |
| 027-1000-6487 | 6" Width |
| 027-1000-12487 | 12" Width |
| 027-1000-24487 | 24” Width |




All rights reserved. 09.16.26 v.35

### 45-Degree Down Elbow

| Part | Description |
|---|---|
| 027-1000-4288 | 2" Width |
| 027-1000-4488 | 4" Width |
| 027-1000-6488 | 6" Width |
| 027-1000-12488 | 12" Width |
| 027-1000-24488 | 24” Width |



### 45-Degree Elbow Covers

| Part | Description |
|---|---|
| 027-1000-6483 | 6" Width Downsweep |
| 027-1000-24484 | 24” Width Downsweep |
| 027-1000-24483 | 24” Width Upsweep |



### 90-Degree Up Elbow

| Part | Description |
|---|---|
| 027-1000-4273 | 2" Width |
| 027-1000-4473 | 4" Width |
| 027-1000-6473 | 6" Width |
| 027-1000-12473 | 12" Width |



### 90-Degree Up Elbow Cover

| Part | Description |
|---|---|
| 027-1000-4474 | 4" Width |
| 027-1000-6474 | 6" Width |




All rights reserved. 09.16.26 v.35

### 90-Degree Down Elbow

| Part | Description |
|---|---|
| 027-2000-4277 | 2" Width |
| 027-2000-4077 | 4" Width |
| 027-2000-6477 | 6" Width |
| 027-2000-12477 | 12" to 6" Width |



### 90-Degree Down Elbow Cover

| Part | Description |
|---|---|
| 027-2000-4278 | 2" Width |
| 027-2000-4078 | 4" Width |
| 027-2000-6478 | 6" Width |
| 027-2000-12478 | 12" to 6” Width |



### End Cap

| Part | Description |
|---|---|
| 027-2000-4208 | 2" Width |
| 027-2000-4008 | 4" Width |
| 027-2000-6408 | 6" Width |
| 027-2000-12408 | 12" Width |
| 027-2000-24408 | 24” Width |



*NOTE: 2" end cap fits directly onto trough. 4", 6" and 12" end cap requires the below adapter. 4", 6" and 12" end caps will attach directly to a reducer, T-transition, L-transition or intersection.*

### End Cap Connector

| Part | Description |
|---|---|
| Not required | 2" Width |
| 027-2000-4009 | 4" Width |
| 027-2000-6409 | 6" Width |
| 027-2000-12409 | 12" Width |



*NOTE: End cap connector can be used to attach a trumpet or a 90-degree drop to a piece of trough.*

### End Cap Connector Kits for Trough

| Part | Description |
|---|---|
| Not required | 2" Width |
| 027-2000-4006 | 4" Width |
| 027-2000-6404 | 6" Width |
| 027-2000-12407 | 12" Width |



*NOTE: Each kit contains an End Cap, End Cap Connector and a FastLock Coupling Kit*

# Section 5: Drop Sections

Amphenol Network Solutions' drop sections create a vertical exit point on horizontal fiber runs into network equipment. As fiber runs horizontally through a trough, the drop sections allow fiber to go vertical. Each drop section protects cable bend radius and fiber as it drops into equipment. Drop sections provide direct access to the bay while minimizing the number of components needed to transition from horizontal to vertical.

## Part Numbers

### Center Drop

| Part | Description |
|---|---|
| 027-1000-4227 | 2" Width |
| 027-2000-4426 | 4" Width |
| 027-2000-6426 | 6" to 4" Width |
| 027-1000-12427 | 12" to 4" Width |
| 027-1000-12426 | 12" to 6" Width |



### Center Drop Cover

| Part | Description |
|---|---|
| 027-2000-4427 | 4" Width |
| 027-2000-6427 | 6" Width |
| 027-1000-12428 | 12" Width |



### Trumpet

| Part Number | Description |
|---|---|
| 027-2000-4275 | 2" Width |
| 027-2000-4075 | 4" Width |
| 027-2000-6475 | 6" Width |
| 027-2000-12475 | 12" Width |
| 027-2000-16475 | 16" Width |
| 027-2000-24475 | 24" Width |



### Flexible Tubing

| Part | Description |
|---|---|
| 027-2902-0005 | 5 Feet Drop |
| 027-2902-0010 | 10 Feet Drop |
| 027-2902-0015 | 15 Feet Drop |
| 027-2902-0020 | 20 Feet Drop |
| 027-2902-0100 | 100 Feet Drop |





Amphenol Network Solutions
All rights reserved. 09.16.26 v.35
509.926.6000 — amphenol-ns.com

### 2" Flexible Tube Adapter

| Part | Description |
|---|---|
| 027-1000-4290 | Single Tube Drop |



### 4" Flexible Tube Adapter

| Part | Description |
|---|---|
| 027-2000-2000 | Single Tube Drop |
| 027-2000-4016 | Dual Tube Drop |



### 4" Flexible Tube Adapter Cover

| Part | Description |
|---|---|
| 027-2000-4018 | 4" Drop Width Cover |

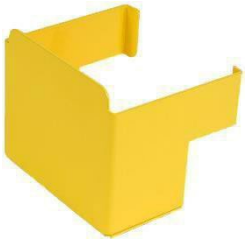

### Slotted Duct

| Part | Description |
|---|---|
| 027-2000-4204 | 2" Width |
| 027-2000-4403 | 4" Width |



*NOTE: Both 2" and 4" slotted duct come with the hardware, including two couplers, needed to mount to a rack.*

### Drop Kit with Off-Ramp and FlexTrax

| Part | Description |
|---|---|
| 027-3000-4203F | Drop Kit with 2” Off-Ramp & 3’ FlexTrax |
| 027-3000-4206F | Drop Kit with 2” Off-Ramp & 6’ FlexTrax |
| 027-3000-4003F | Drop Kit with 4” Off-Ramp & 3’ FlexTrax |
| 027-3000-4006F | Drop Kit with 4” Off-Ramp & 3’ FlexTrax |


Amphenol Network Solutions
All rights reserved. 09.16.26 v.35
509.926.6000 — amphenol-ns.com

# Section 6: WaveTrax Express

Simplify your overhead cable management with the quick and easy connection of the Amphenol Network Solutions WaveTrax Express. As demands for fiber continue to grow, WaveTrax Express offers accelerated network growth by reducing installation times for new builds and expansion. All WaveTrax Express parts attach to 4-inch, 6-inch, 12-inch, and 24-inch trough.

If you have an installed competitor cable management system, WaveTrax Express compatible brackets install to existing CommScope FiberGuide® system and FiberRunner® layouts.

## Part Numbers

### Express Off-Ramp with Express Bracket

| Part | Description | |
|---|---|---|
| 027-2000-4262 | 2" Drop | 4" and 6" trough |
| 027-2000-12262 | 2" Drop | 12" trough only |
| 027-2000-4062 | 4" Drop | 4" and 6" trough |
| 027-2000-4064 | 4” Drop | 4” and 6” trough w/lid |
| 027-2000-12462 | 4" Drop | 12" trough only |
| 027-2000-24062 | 4” Drop | 12” and 24” trough |
| 027-2000-6062 | 6” Drop | 6” and 12” trough |
| 027-2000-24122 | 12” Drop | 12” and 24” trough |
| 027-2000-16122 | 16” Drop | 12” and 24” trough |





### Express Off-Ramp for CommScope’s FiberGuide® Fiber Management System or Panduit’s FiberRunner® Trough

| Part Number | Description | |
|---|---|---|
| 027-C0406-4262 | 2" Drop | 4" and 6" trough |
| 027-C0406-4062 | 4" Drop | 4" and 6" trough |
| 027-C0012-4062 | 4" Drop | 12" trough only |
| 027-C1246-24062 | 4” Drop | 12” and 24” trough |
| 027-C0612-6062 | 6” Drop | 6” and 12” trough |
| 027-C1224-24122 | 12” Drop | 12” & 24” trough |
| 027-C1224-16122 | 16” Drop | 12” & 24” trough |



6” Drop

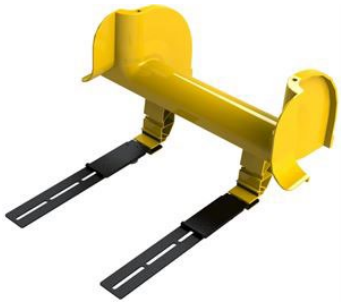

12” Drop



Amphenol Network Solutions
All rights reserved. 09.16.26 v.35
509.926.6000 — amphenol-ns.com

## Express Off-Ramp Cover

| Part | Description |
|---|---|
| 027-2000-4263 | 2" Cover |
| 027-1000-4066 | 4" Cover |



## Express T

| Part | Width | Description |
|---|---|---|
| 027-2000-6412 | 6" | 4", 6" or 12" WaveTrax |
| 027-C0406-6412 | | 4" or 6" FiberGuide® system or FiberRunner® |
| 027-C0012-6412 | | 12" FiberGuide® system or FiberRunner® |
| 027-2000-12412 | 12" | 4", 6" or 12" WaveTrax |
| 027-C0012-12412 | | 12" FiberGuide® system or FiberRunner® |



6" Express T



12" Express T

## Express T Cover

| Part | Description |
|---|---|
| 027-2000-6413 | 6" Cover |
| 027-2000-12413 | 12" Cover |



6" Express T Cover



12" Express T Cover



Amphenol Network Solutions
All rights reserved. 09.16.26 v.35
509.926.6000 — amphenol-ns.com

# Section 7: Cablelinks

Cablelinks is a flexible, snap-together solution to navigate fiber runs down to network equipment. Cablelinks can be articulated on all three axes while maintaining proper bend radius of fiber. Cablelinks is easy to install with no tools required. Use the Amphenol Network Solutions Cablelinks to maneuver through tight areas and guide fiber to active equipment.

## Part Numbers

### Cablelinks

| Part | Description |
|---|---|
| 027-0000-4200 | 2": 3 links per foot |
| 027-0000-4000 | 4": 1.5 links per foot |
| 027-0000-6400 | 6": 1.33 links per foot |



### WaveTrax Adapter to Cablelinks

| Part | Description |
|---|---|
| 027-2000-4215 | 4" to 2" Cablelinks |
| 027-2000-4015 | 4" or Dual 2" Cablelinks to 4" WaveTrax |
| 027-2000-6415 | 6" or Dual 2" Cablelinks to 6" WaveTrax |
| 027-C1000-6007 | 6” Adapter, connects FiberGuide® system trough to one 4” Cablelinks or two 2” Cablelinks |



4" to 2"



2" or 4" to 4"



6" to 6"

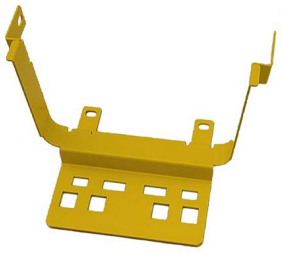

027-C1000-6007

### Cablelinks to WaveTrax Trough Adapter

| Part | Description |
|---|---|
| 027-1000-4207 | 2" Width |
| 027-2000-4090 | 4" Width |
| 027-1000-6490 | 6" Width |




All rights reserved. 09.16.26 v.35

# Section 8: Mounting Brackets

Amphenol Network Solutions uses several different types of brackets to provide secure mounting for any configuration. It is recommended you support WaveTrax trough a minimum of every 3-4 feet and at every coupler. Support WaveTrax Express interchanges at the coupler that connects the trough. With Cablelinks modules, it is recommended to support two-inch and four-inch Cablelinks every three feet and six-inch Cablelinks every two feet.

## Part Numbers

### Support Bracket for $^{5}/_{8}$" Threaded Rod

| Parts | Description |
|---|---|
| 027-1000-4251 | 2" Width |
| 027-1000-4051 | 4" & 6" Width |
| 027-1000-12405 | 12" Width |
| 027-1000-24581 | 24” Width |



027-1000-4051

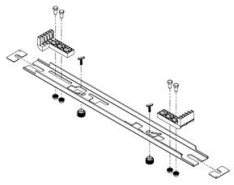

027-1000-24581

### Variable Support Kit

| Parts | Description |
|---|---|
| 027-1000-24412 | 24” Variable Support Kit for 12” Exits |
| 027-1000-24124 | 24” Variable Support Kit for 24” Exits |



027-1000-24412

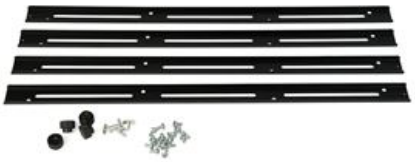

027-1000-24124

### Universal Support Bracket

| Part | Description |
|---|---|
| 027-2000-4205 | 2" Width |
| 027-1000-4004 | 4-6" Width |

*NOTE: Mounts to a threaded rod, ladder rack or vertical surface. Supports 2" channel at adjustable heights. Up to 1-1/2" ladder rack side wall.*



### Center Support Bracket

| Part | Description |
|---|---|
| 027-1000-4252 | 2" Width |
| 027-1000-4052 | 4" & 6" Width |
| 027-1000-1250 | 12" Width |





Amphenol Network Solutions
All rights reserved. 09.16.26 v.35
509.926.6000 — amphenol-ns.com

## C-Bracket

| Part | Description |
|---|---|
| 027-1000-4253 | 2" Width |
| 027-1000-4053 | 4" & 6" Width |
| 027-1000-1255 | 6” & 12" Width* |

**Can be used on 12” CommScope FiberGuide® or 12” Panduit FiberRunner®*

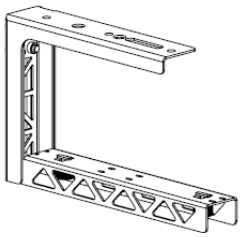

## Adjustable Bracket

| Part | Description |
|---|---|
| 027-1000-4216 | 2" Trough |
| 027-2000-4212 | BRKT: Mid-span, 2" |
| 027-1000-4211 | 2" Cablelinks Only |
| 027-1000-4117 | 4" Cablelinks Only |

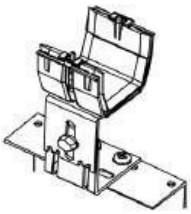





## Cable Rack Bracket

| Part | Description |
|---|---|
| 027-1000-4260 | 2" Width |
| 027-1000-4062 | 4" & 6" Width |







## Trough Support Clamp (Mighty Clamp)

| Part | Description |
|---|---|
| 027-2000-4260 | 2" Width |
| 027-2000-4060 | 4", 6" & 12" Width |





*NOTE: All our support brackets come with a trough support clamp and the cable rack bracket will need to be purchases separately.*

## $^{5}/_{8}$" Threaded Rod Kit

| Part | Description |
|---|---|
| 027-1000-4002 | 18" |
| 027-1000-4001 | 40" |

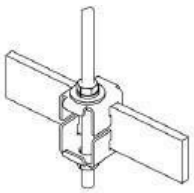





*NOTE: Fits on a ladder rack with included clamshell bracket.*



Amphenol Network Solutions
All rights reserved. 09.16.26 v.35
509.926.6000 — amphenol-ns.com

### Clamshell Bracket Kit

| Part | Description |
|---|---|
| 027-1000-4103 | Clamshell Bracket |



** No threaded rod*

### Mounting Bracket Hardware Kits

| Part | Description |
|---|---|
| 027-1000-1026 | T-Bolt Kit, 10pcs |
| 027-1000-1025 | Split Nut Kit, 10pcs, ½” |
| 027-1000-1058 | Split Nut Kit, 10pcs, 5/8” |

### 24” Trough - Mounting Hardware

| Parts | Description |
|---|---|
| 027-1000-24581 | Trough Support Bracket for 5/8” threaded rod |
| 027-1000-24124 | 24” Variable Support Kit for 24” Exits |

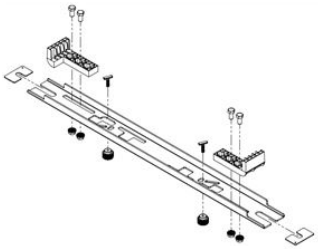

027-1000-24581

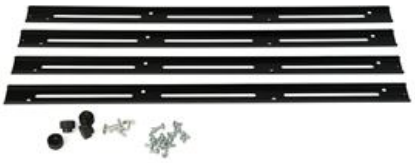

027-1000-24124

## Section 9: Application Standards

| Standard | Description |
|---|---|
| UL 2024 | Standard for Cable Routing Assemblies and Communications Raceways |
| NEBS GR-63-CORE | Network Equipment Building Systems (NEBS) |



Amphenol Network Solutions
All rights reserved. 09.16.26 v.35
509.926.6000 — amphenol-ns.com

# Section 10: FlexTrax®

Amphenol Network Solutions introduces one of the most innovative and imaginative cable management solutions in the world! With easy assembly and installation, the 2” FlexTrax® is a flexible cable manager that enables quick access to cables for rapid changes in complex routing applications. The track design enables high visibility to cable management capacity and measures 2” x2” x 1ft.

## Part Numbers

FlexTrax®

| Part Number | Description |
|---|---|
| FLX2-1FT | 2” FlexTrax 1’ Section with Clips.<br>Two pre-attached mounting clips have a hole for a screw, or can snap into the C-clamp |



## Accessories

| Part Number | Description |
|---|---|
| FLX2-END-CLAMP | 2” FlexTrax End Clamp<br>For use with thin flat surfaces |
| FLX2-C-CLAMP | 2” FlexTrax C-Clamp<br>Attaches to mounting clip on FLX2-1FT |
| FLX2-LATCH-10 | 2” FlexTrax Latch (10 pack)<br>Use one Latch per 1FT section or as needed |
| FLX2-BRKT-KIT-10 | 2” FlexTrax L-Bracket Hardware Kit (10 pack)<br>Standard vertical spacing is every 10RU |
| FLX2-EXIT-2 | 2" FlexTrax Exit (2 Pack)<br>Recommended for extra protection at the end of a section or cut section |
| FLX2-DROP | 2” FlexTrax Wire Basket Drop Kit – 1 Drop<br>1 drop kit includes drop attachment, 2 FlexTrax Exits, and 1 FlexTrax End Clamp. |
| FLX2-4DROP | 2” FlexTrax Wire Basket Drop Kit – 4 Drops<br>4 drop kit includes drop attachment, 4 FlexTrax Exits, and 5 zip ties |
| FLX2-VCM-6FT | 2” FlexTrax 6’ Vertical Cable Manager |





FLX2-END-CLAMP



FLX2-C-CLAMP





FLX2-LATCH-10



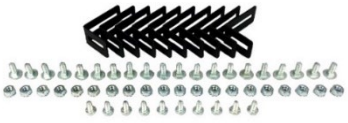

FLX2-BRKT-KIT-10



FLX2-EXIT-2



FLX2-DROP



FLX2-4DROP







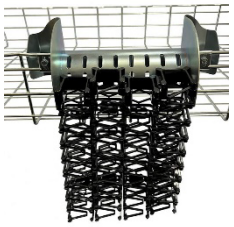

CE

**W00104102026**



Amphenol Network Solutions
All rights reserved. 09.16.26 v.35
509.926.6000 — amphenol-ns.com