WaveTrax®

Installation Guide



Amphenol

NETWORK SOLUTIONS™

Installation Guide, Part Number 150727 A4

Copyright 2026, Amphenol Network Solutions. All Rights Reserved

22425 East Appleway Ave. #11
Liberty Lake, WA 99019

Amphenol Network Solutions assumes no liability for the application or use of these products. Neither does Amphenol Network Solutions convey any license under its patent rights nor the patent rights of others. This document and the products described herein are subject to change without notice.

Connecting the future for over 40 years

Amphenol Network Solutions looks beyond what's possible in fiber optic networks. Challenging the status quo since 1982, Amphenol Network Solutions designs and manufactures products that link networks together and protect our customers' fiber investments. We are driven by the principles of innovation and customer service.

The company, based in Liberty Lake, WA, places fiber-optic and power-management solutions around the globe on communication service-provider networks, enterprise and utility networks, and data centers.

Technical Support

Email: support@amphenol-ns.com
Phone: 1-509-926-6000

Table of Contents

Section One: Product Introduction 12
1.1 About this Guide 13
1.2 Terminology 13
1.3 Sample Layout 14
1.3.1 Vertical Fiber Management Solution 15
1.4 Types of Components 16
1.4.1 Trough 16
1.4.2 Covers 16
1.4.3 CableLinks 16
1.4.3 Couplers 17
1.4.4 Horizontal Transitions 17
1.4.5 Vertical Turns 17
1.4.6 Reducers 18
1.4.7 Drop Sections 18
1.4.8 Pin Adapter Attachment 18
1.4.9 Express Off-Ramps 19
1.4.10 Express T Interchange 19
1.4.11 Express Overpass 19
1.4.12 Vertical Cable Management 20
1.4.13 Alternative System Adapters 20
1.5 Basic Design Concepts 21
1.5.1 Overhead and Underfloor Design 21
1.5.2 Trough Size 21
1.5.3 Changing the Path 22
1.5.4 Mounting to Auxiliary Framing and Ladder Rack 22
1.6 Exiting the Trough 23
1.7 Sample Applications 24
1.8 Site Survey 26
1.8.1 Overview 26
1.8.2 Requirements 26
1.8.3 Conducting the Survey 26
1.8.4 Amphenol Network Solutions Review 27
1.8.5 Site Sketch Example 28
Section Two: Installing Support Brackets 29
2.1 Common Support Brackets 30
2.1.1 Threaded Rod Bracket 31
2.1.2 Universal Bracket 32
2.1.3 Threaded Rod Kit 33
2.1.4 Trough Support Clamp (Mighty Clamp) 34
2.1.5 Adjustable Bracket 35
2.1.6 Center Support Bracket 36
2.1.7 C-Bracket 37
2.1.8 Cable Rack Bracket 38

Amphenol Network Solutions
All rights reserved. 150727 A4 06.11.2026
1.509.926.6000 — amphenol-ns.com

Section Three: Installing Horizontal Components 39
3.1 Inspection 39
3.2 Hand Tool Requirements 39
3.3 Cutting Trough 40
3.4 Notching Trough 41
3.5 FastLock™ Coupler 44
3.5.1 FastLock Coupler Components 44
3.5.2 Assembling the FastLock Coupler 45
3.5.3 Installing a FastLock Coupler 46
3.5.4 Removing FastLock Couplers 48
3.6 Connecting Components with Locking Pins 49
3.7 Removing Components with Locking Pins 50
3.8 Adapting WaveTrax Trough to CableLinks® 51
3.9 Installing WaveTrax Trough or Slack Management Trough 52
3.9.1 Installing Trough Covers 54
3.10 Installing a Horizontal Intersection or Slack Management Transisition 55
3.10.1 Installing a Horizontal Intersection Cover 57
3.11 Installing a T-Transition 58
3.11.1 Installing a T-Transition Cover 60
3.12 Installing a Reducer 61
3.12.1 Installing a Reducer Cover 63
3.13 Installing a Trumpet 65
3.14 Installing a 45-Degree Elbow 67
3.15 Installing a L-Transition 69
3.15.1 Installing a L-Transition Cover 71
3.16 Installing an Express T Interchange 72
3.16.1 Installing an Express T Interchange Cover 74
3.17 Installing a 45-Degree Upsweep 75
3.18 Installing a 45-Degree Down sweep 77
3.18.1 Installing a 45-Degree Down sweep Cover 79
3.19 Installing a 90-Degree Upsweep 80
3.19.1 Installing a 90-Degree Upsweep Cover 82
3.20 Installing a 90-Degree Drop Attachment 83
3.20.1 Installing a 90-Degree Drop Attachment Cover 85
3.21 Installing an Express Overpass 86
3.21.1 Installing an Express Overpass Cover 89
3.22 Adapting to a Competitive System 90
Section Four: Installing Vertical Components 91
4.1 Installing a Center Drop 91
4.1.1 Installing a Center Drop Cover 93
4.2 Installing an Express Off-Ramp 94
4.2.1 Installing an Express Off-Ramp Cover 96
4.3 Working with CableLinks 96
4.3.1 Overview 96
4.3.2 Connecting Links 97

Amphenol Network Solutions
All rights reserved. 150727 A4 06.11.2026
1.509.926.6000 — amphenol-ns.com

4.3.3 Connecting Links at the Vertical Joint 98
4.3.4 Adjusting Links 99
4.4 Separating Links 100
4.5 WaveTrax Vertical Adapter to CableLinks 102
4.6 CableLinks to Trough Adapter 105
4.7 Installing Slotted Duct 109
4.8 Installing Flexible Tube Adapters and Flexible Tube 115
Section Five: Installing Accessories 119
5.1 Installing End Caps 119
Section Six: General Information 122
6.1 Trough Capacity 122
6.2 Technical Specifications 123

Amphenol Network Solutions
All rights reserved. 150727 A4 06.11.2026
1.509.926.6000 — amphenol-ns.com

List of Figures

Fig. 1-1: WaveTrax trough with CableLinks 12
Fig. 1-2: Sample layout 14
Fig. 1-3: Sample vertical fiber management 15
Fig. 1-4: Trough 16
Fig. 1-5: Center drop cover 16
Fig. 1-6: CableLinks 16
Fig. 1-7: FastLock coupler 17
Fig. 1-8: T-transition 17
Fig. 1-9: 90° Up elbow 17
Fig. 1-10: Reducer 18
Fig. 1-11: Center drop 18
Fig. 1-12: Pin adapter attachment 18
Fig. 1-13: Express off-ramp 19
Fig. 1-14: Express T interchange 19
Fig. 1-15: Express overpass 19
Fig. 1-16: Slotted Duct 20
Fig. 1-17: Competitive adapter 20
Fig. 1-18: 4" trough converted to three 2" troughs 21
Fig. 1-19: CableLinks vertical path change 22
Fig. 1-20: All-thread kit and universal bracket 22
Fig. 1-21: Trough exits 23
Fig. 1-22: Visio site sketch 28
Fig. 2-1 Support bracket and hardware 29
Fig. 2-2: Trough support system 29
Fig. 2-3: Universal bracket 30
Fig. 2-4: Threaded rod bracket 31
Fig. 2-5: Universal bracket 32
Fig. 2-6: Threaded rod kit 33
Fig. 2-7: Trough support clamp (mighty clamp) 34
Fig. 2-8: Adjustable bracket 35
Fig. 2-9: Center support bracket 36
Fig. 2-10: C-bracket 37
Fig. 2-11: Cable rack bracket 38
Fig. 3-0: Custom miter box drawing 40
Fig. 3-2: 24” Notching Tool guide 41
Fig. 3-4: FastLock coupler top piece 44
Fig. 3-5: FastLock coupler bottom piece 44
Fig. 3-6: Bottom piece with slots 45
Fig. 3-7: Top and bottom pieces lined up 45
Fig. 3-8: Assembled coupler 45
Fig. 3-9: Support bracket attached to ladder rack 46
Fig. 3-10: Aligning the coupler 46
Fig. 3-11: Securing the coupler to the support bracket 47

Amphenol Network Solutions
All rights reserved. 150727 A4 06.11.2026
1.509.926.6000 — amphenol-ns.com

Fig. 3-12: Top piece clips 48
Fig. 3-13: Removing the top piece 48
Fig. 3-15: Transition pins 49
Fig. 3-16: Setting the component 49
Fig. 3-17: Component locking tab 49
Fig. 3-18: Locking tab 50
Fig. 3-19: Rotating component 50
Fig. 3-20: Removing component 50
Fig. 3-21: Adapter, Transition to CableLinks 51
Fig. 3-22: Adapter, Transition to CableLinks, Reducing 51
Fig. 3-23: Trough Coupler to CableLinks, Adjustable 51
Fig. 3-24: Drop Attachment 51
Fig. 3-25: Adapter, Transition to CableLinks, Reducing 51
Fig. 3-26: Attaching trough to coupler 52
Fig. 3-27: Top stops 52
Fig. 3-28: Bottom stops 52
Fig. 3-29: Trough attached to both sides of coupler 52
Fig. 3-30: Installing top piece of coupler 53
Fig. 3-31: Locking coupler 53
Fig. 3-32: Snap on location 54
Fig. 3-33: Trough cover 54
Fig. 3-35: Bottom piece of coupler 55
Fig. 3-34: Top piece of coupler 55
Fig. 3-36: Attaching trough to coupler 55
Fig. 3-37: Adding intersection to coupler 55
Fig. 3-38: Connecting intersection to trough with a coupler 56
Fig. 3-39: Locking the intersection to the trough 56
Fig. 3-40: Lining up the intersection cover 57
Fig. 3-41: Installing the intersection cover 57
Fig. 3-43: Bottom piece of coupler 58
Fig. 3-42: Top piece of coupler 58
Fig. 3-44: Attaching trough to coupler 58
Fig. 3-45: Adding T-transition to coupler 58
Fig. 3-46: Connecting T-transition to trough with a coupler 59
Fig. 3-47: Locking T-transition to the trough 59
Fig. 3-48: T-transition hinged clips 60
Fig. 3-49: T-transition cover 60
Fig. 3-51: Bottom piece of coupler 61
Fig. 3-50: Top piece of coupler 61
Fig. 3-52: Attaching coupler to component 61
Fig. 3-53: Adding a reducer to the coupler 61
Fig. 3-54: Connecting components together with a coupler 62
Fig. 3-55: Locking components together with a coupler 62
Fig. 3-56: Reducer cover locking tabs 63
Fig. 3-57: Turning the locking tabs 63

Amphenol Network Solutions
All rights reserved. 150727 A4 06.11.2026
1.509.926.6000 — amphenol-ns.com

Fig. 3-58: Installing the reducer cover 63
Fig. 3-59: Lining up the reducer cover 64
Fig. 3-60: Reducer cover and guide tabs 64
Fig. 3-62: Bottom piece of coupler 65
Fig. 3-61: Top piece of coupler 65
Fig. 3-63: Connecting trough to coupler 65
Fig. 3-64: Connecting the trumpet to the coupler 65
Fig. 3-65: Connecting the trumpet to the trough 66
Fig. 3-66: Locking the trumpet to the trough 66
Fig. 3-67: Connecting female to male pin adapters 66
Fig. 3-68: Locking the trumpet to a component 66
Fig. 3-69: Top piece of coupler 67
Fig. 3-70: Bottom piece of coupler 67
Fig. 3-71: Attaching the coupler to an elbow 67
Fig. 3-72: Adding trough to the coupler 67
Fig. 3-73: Connecting the elbow and trough with a coupler 68
Fig. 3-74: Locking the elbow to the trough 68
Fig. 3-76: Bottom piece of coupler 69
Fig. 3-75: Top piece of coupler 69
Fig. 3-77: Attaching trough to the coupler 69
Fig. 3-78: Adding the L-transition to the coupler 69
Fig. 3-79: Connecting the L-transition to the trough with a coupler 70
Fig. 3-80: Locking the L-transition to the trough 70
Fig. 3-81: L-transition hinged clips 71
Fig. 3-82: L-transition cover 71
Fig. 3-83: Express ratcheting bracket pieces 72
Fig. 3-84: Assembling the Express L bracket 72
Fig. 3-85: Aligning the Express L bracket 72
Fig. 3-86: Locking the bracket to the trough 73
Fig. 3-87: Connecting the T interchange to the ratcheting bracket 73
Fig. 3-88: Installing the Express T interchange cover 74
Fig. 3-89: Top piece of coupler 75
Fig. 3-90: Bottom piece of coupler 75
Fig. 3-91: Attaching an upsweep to the coupler 75
Fig. 3-92: Adding trough to the coupler 75
Fig. 3-93: Connecting the upsweep to the trough with a coupler 76
Fig. 3-94: Locking the upsweep to the trough with a coupler 76
Fig. 3-96: Bottom piece of coupler 77
Fig. 3-95: Top piece of coupler 77
Fig. 3-97: Attaching a downsweep to the coupler 77
Fig. 3-98: Adding trough to the coupler 77
Fig. 3-99: Connecting the downsweep to the trough with a coupler 78
Fig. 3-100: Locking the downsweep to the trough with a coupler 78
Fig. 3-101: Downsweep female pin openings 79
Fig. 3-102: Downsweep cover 79

Amphenol Network Solutions
All rights reserved. 150727 A4 06.11.2026
1.509.926.6000 — amphenol-ns.com

Fig. 3-103: Top piece of coupler 80
Fig. 3-104: Bottom piece of coupler 80
Fig. 3-105: Attaching an upsweep to the coupler 80
Fig. 3-106: Adding trough to the coupler 80
Fig. 3-107: Connecting the upsweep to the trough with a coupler 81
Fig. 3-108: Locking the upsweep to the trough with a coupler 81
Fig. 3-109: 90-degree upsweep female pin openings 82
Fig. 3-110: Upsweep cover 82
Fig. 3-112: Bottom piece of coupler 83
Fig. 3-111: Top piece of coupler 83
Fig. 3-113: Attaching a coupler to the component 83
Fig. 3-114: Adding a drop attachment to the coupler 83
Fig. 3-115: Connecting a drop attachment to a component with a coupler 84
Fig. 3-116: Locking a drop attachment to a component with a coupler 84
Fig. 3-117: Attaching a drop attachment to a component 84
Fig. 3-118: Attaching a drop attachment to a component 84
Fig. 3-119: Drop attachment tab openings 85
Fig. 3-120: Drop attachment cover 85
Fig. 3-121: Assembling the Express L bracket 86
Fig. 3-122: Aligning the Express L bracket 86
Fig. 3-123: Locking the Express L bracket to the trough 87
Fig. 3-124: Aligning both Express L brackets 87
Fig. 3-125: Connecting the junction to the coupler 87
Fig. 3-126: Assembled overpass 88
Fig. 3-127: Securing the Express Overpass to the Express L bracket 88
Fig. 3-128: Overpass cover 89
Fig. 3-129: Installing the top hat bracket 90
Fig. 3-130: Mounting the Express L bracket 90
Fig. 3-131: Securing the Express T interchange to the Express L bracket 90
Fig. 4-2: Bottom piece of coupler 91
Fig. 4-1: Top piece of coupler 91
Fig. 4-3: Attaching center drop to coupler 91
Fig. 4-4: Adding trough to the coupler 91
Fig. 4-5: Connecting the center drop to the trough with a coupler 92
Fig. 4-6: Locking the center drop to the trough 92
Fig. 4-7: Center drop front cover 93
Fig. 4-8: Attaching center drop top cover 93
Fig. 4-9: Closing the center drop top cover 93
Fig. 4-10: Express ratcheting bracket pieces 94
Fig. 4-11: Assembling the Express L bracket 94
Fig. 4-12: Aligning the Express L bracket 94
Fig. 4-13: Locking the Express L bracket 95
Fig. 4-14: Securing the Express Off-Ramp to the Express L bracket 95
Fig. 4-15: Inserting screws into Express Off-Ramp 95
Fig. 4-16: Express Off-Ramp tab openings 96

Amphenol Network Solutions
All rights reserved. 150727 A4 06.11.2026
1.509.926.6000 — amphenol-ns.com

Fig. 4-17: Express Off-Ramp cover 96
Fig. 4-18: CableLinks module 96
Fig. 4-19: Aligning opposite ends of links 97
Fig. 4-20: Connecting separate CableLinks ends together 97
Fig. 4-21: Connecting separate 6-inch CabeLinks ends together 97
Fig. 4-22: Locking 6" CableLinks together 98
Fig. 4-23: CableLinks module 98
Fig. 4-24: Squeezing the vertical walls 98
Fig. 4-25: Attaching CableLinks together 99
Fig. 4-26: CableLinks horizontal joint 99
Fig. 4-27: CableLinks module 99
Fig. 4-28: CableLinks vertical walls 100
Fig. 4-29: Unlocking the horizontal joint 100
Fig. 4-30: Unlocking 6-inch CableLinks horizontal joint 101
Fig. 4-31: CableLinks module 101
Fig. 4-32: CableLinks vertical walls 101
Fig. 4-33: Attaching vertical adapter to center drop 102
Fig. 4-34: Locking the vertical adapter to the center drop 102
Fig. 4-35: Connecting CableLinks modules to the vertical adapter 103
Fig. 4-36: Adding CableLinks modules 103
Fig. 4-37: Attaching vertical adapter to center drop 104
Fig. 4-38: Locking the vertical adapter to the center drop 104
Fig. 4-39: Connecting CableLinks module to the vertical adapter 104
Fig. 4-40: Adding CableLinks modules 105
Fig. 4-42: Bottom piece of coupler 105
Fig. 4-41: Top piece of coupler 105
Fig. 4-43: Attaching trough to a coupler 106
Fig. 4-44: Adding the trough adapter to the coupler 106
Fig. 4-45: Connecting the trough adapter to the trough with a coupler 106
Fig. 4-46: Locking the trough adapter to the trough 106
Fig. 4-47: Lining up the CableLinks module with the trough adapter 107
Fig. 4-48: Securing the CableLinks module to the trough adapter 107
Fig. 4-49: Connecting male and female ends of the CableLinks module 107
Fig. 4-50: H-shaped gates on the CableLinks module 108
Fig. 4-51: Setting the vertical component on the trough 109
Fig. 4-52: Attaching vertical adapter to the vertical component 109
Fig. 4-53: Top piece of coupler 109
Fig. 4-54: Bottom piece of coupler 109
Fig. 4-55: Aligning the rack bracket 110
Fig. 4-56: Securing rack bracket together 110
Fig. 4-57: Securing rack bracket and coupler to the rack 110
Fig. 4-58: Locking slotted duct to rack bracket with a coupler 111
Fig. 4-59: Attaching a CableLinks module to the vertical adapter 111
Fig. 4-60: Adding CableLinks modules 112
Fig. 4-61: Removing the top piece of the coupler 112

Amphenol Network Solutions
All rights reserved. 150727 A4 06.11.2026
1.509.926.6000 — amphenol-ns.com

Fig. 4-62: Locking the trough adapter to the slotted duct with a coupler 113
Fig. 4-63: Securing the trough adapter to the CableLinks module 113
Fig. 4-64: Installing the H-shaped gates to the CableLinks modules 114
Fig. 4-65: Installing the slotted duct cover 114
Fig. 4-66: Lining up the tube base and tube clamp with the single tube adapter 115
Fig. 4-67: Connecting tube base and tube clamp to single tube adapter 115
Fig. 4-68: Attaching component to the single tube adapter 115
Fig. 4-69: Locking a component to the single tube adapter 116
Fig. 4-70: Connecting split tube to the tube clamp 116
Fig. 4-71: Lining up tube base and tube clamp with the dual tube adapter 117
Fig. 4-72: Connecting tube base and clamp to the dual tube adapter 117
Fig. 4-73: Setting up dual flex tube adapter clamps 117
Fig. 4-74: Installing adapter on to a reducer 118
Fig. 4-75: Locking the adapter to the reducer 118
Fig. 4-76: Connecting split tube to the tube clamp 118
Fig. 5-1: Lining up the end cap with the trough 119
Fig. 5-2: Attaching the end cap to the trough 119
Fig. 5-3: Top piece of coupler 120
Fig. 5-4: Bottom piece of coupler 120
Fig. 5-5: Connecting trough to a coupler 120
Fig. 5-6: Adding an end cap connector to the coupler 120
Fig. 5-7: Attaching end cap to end cap connector 120
Fig. 5-8: Locking the end cap to the end cap connector 121
Fig. 5-9: Connecting the end cap connector to trough 121
Fig. 5-10: Locking end cap connector to trough 121

Amphenol Network Solutions
All rights reserved. 150727 A4 06.11.2026
1.509.926.6000 — amphenol-ns.com

Section One: Product Introduction

This installation guide gives you directions on:

- How to install all WaveTrax® support brackets, horizontal components, vertical components and accessories
- How to complete a WaveTrax site survey
- How to retrofit current cable management architecture into WaveTrax



Fig. 1-1: WaveTrax trough with CableLinks

The Amphenol Network Solutions WaveTrax cable management system is an open-trough optical-cable raceway system that combines rigid or articulating troughs with transitions, intersections, drops, reducers, couplers, interchanges, overpasses, optional covers and express off-ramps to create a secure, high-capacity fiber-optic cable routing path between fiber distribution equipment.

WaveTrax is available in 2", 4", 6", 12” and 24" widths that physically protect cable and maintain a minimum 2" bend radius throughout the cable’s path. Rigid troughs are self-supporting up to 175 lbs. (79.5 kg) at up to six-foot intervals.

Custom-engineered support brackets provide convenient fastening for every workspace, whether overhead or under the floor.

WaveTrax Express also allows easy re-configuration or expansion in the future, using snap-on components like Express Interchange, Overpass or Off-Ramp for an instant transition or drop with no trough disassembly or cutting.

CableLinks®, the Amphenol Network Solutions articulating trough system, is available in 2", 4" and 6" widths that protect cable and maintain 2" bend radius just like WaveTrax. However, it flexes 22.5° from center both horizontally and vertically to easily create a cable path when multiple and/or frequent changes in direction required, using only four links to complete a 90-degree turn.

CableLinks snap together and install with no special tools. The inter-connecting links create a cable management solution that is flexible and easy to thread through the most complex environment, without cutting or waste. CableLinks components connect with WaveTrax using simple adapters.

Features and benefits of WaveTrax include:

- Fast deployment — installs 50% faster than the fastest competitor on new installations
- Reduces time spent on retrofits by 60%
- Simple, intuitive components that simply snap together
- Uncomplicated configuration and support
- Straightforward installation
- Comprehensive solution — 2", 4", 6", 12” and 24" trough widths
- Lower cost of installation, engineering and end solution
- Lower total cost of ownership

Amphenol Network Solutions
All rights reserved. 150727 A4 06.11.2026
1.509.926.6000 — amphenol-ns.com

1.1 About this Guide

This manual provides a comprehensive overview of and installation guidelines for the WaveTrax fiber raceway. While care has been taken to define all necessary information, complete details may not be covered. If you have any questions, contact Amphenol Network Solutions Technical Support at support@amphenol-ns.com or call 509-926-6000.

Throughout this guide, select information is highlighted in the form of Notes, Alerts, Cautions and Warnings. These notifications are prominent, and their importance is indicated as follows:

NOTE: General information to which the user should pay special attention.

ALERT

ALERT! Important information and/or instructions to which the user should adhere.

CAUTION

CAUTION! Indicates a hazardous situation, which could result in minor or moderate injury.

WARNING

WARNING! Indicates a potentially hazardous situation which could result in death or serious injury.

Amphenol Network Solutions assumes no liability for the application or use of these products. Amphenol Network Solutions does not convey any license under its patent rights of others. This document and the products described herein are subject to change without notice.

1.2 Terminology

The following is a list of acronyms and abbreviations used throughout this manual.

Acronym/Abbreviation	Term
CMS	Cable management system
Kg	Kilograms
Lbs.	Pounds

Amphenol Network Solutions
All rights reserved. 150727 A4 06.11.2026
1.509.926.6000 — amphenol-ns.com

1.3 Sample Layout

The following diagram shows the components available in the WaveTrax fiber raceway system. Any one system will typically not use every component. This example shows a 6-inch-wide system; WaveTrax is available 2", 4", 6", 12” and 24" widths, along with reducers to transition to smaller troughs.

CableLinks articulating troughs are available in 2", 4" and 6" widths. All components are 4" high except for 2" widths, which are 2" high.

Parts List

1. 6' Trough
2. Reducer
3. Intersection
4. Trumpet
5. Slack Storage
6. T-transition
7. 90-Degree Drop Adapter
8. Slotted Duct
9. Express Off-Ramp
10. Dual 2” FlexTrax
11. Center Drop
12. End Cap
13. Drop adapter
14. 45° Elbow
15. Coupling kit
16. L-transition
17. Up elbow
18. Down elbow
19. Competitive system adapter

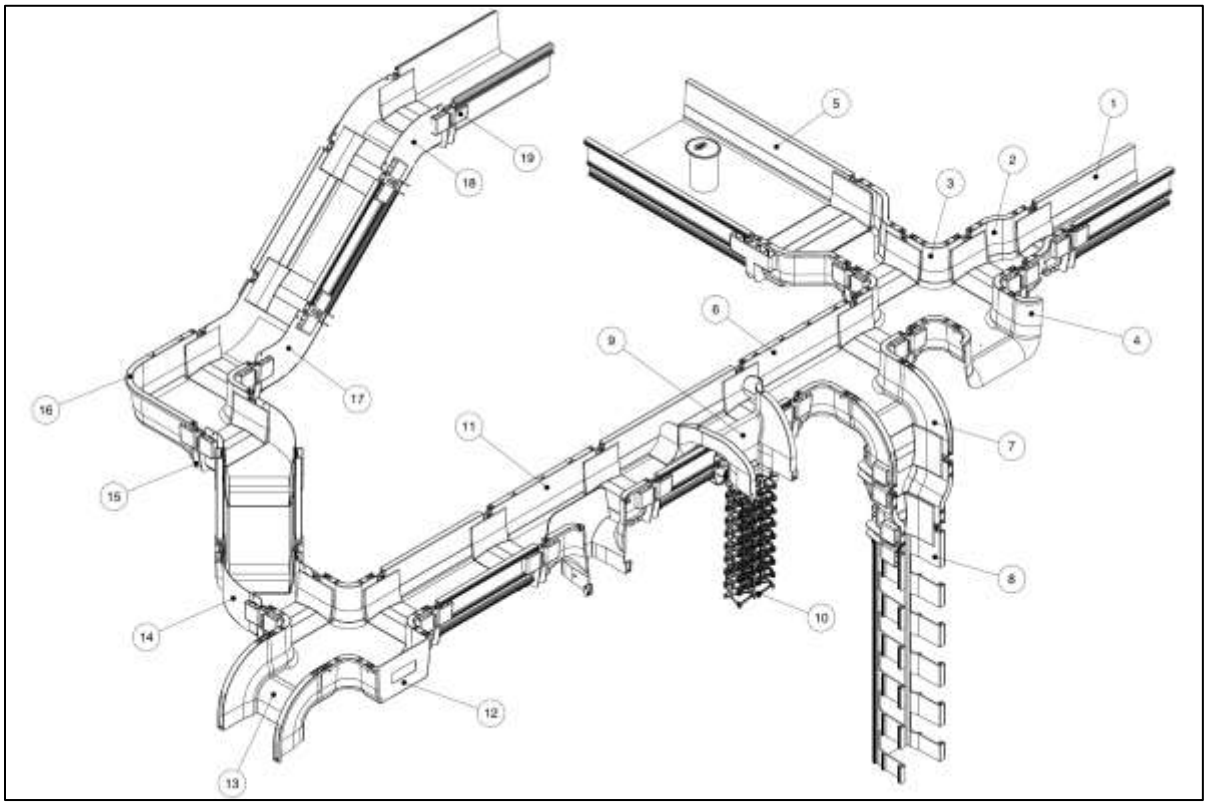

Fig. 1-2: Sample layout

Amphenol Network Solutions
All rights reserved. 150727 A4 06.11.2026
1.509.926.6000 — amphenol-ns.com

1.3.1 Vertical Fiber Management Solution

4" Center Drop to Single Flex Tube to Slotted Duct

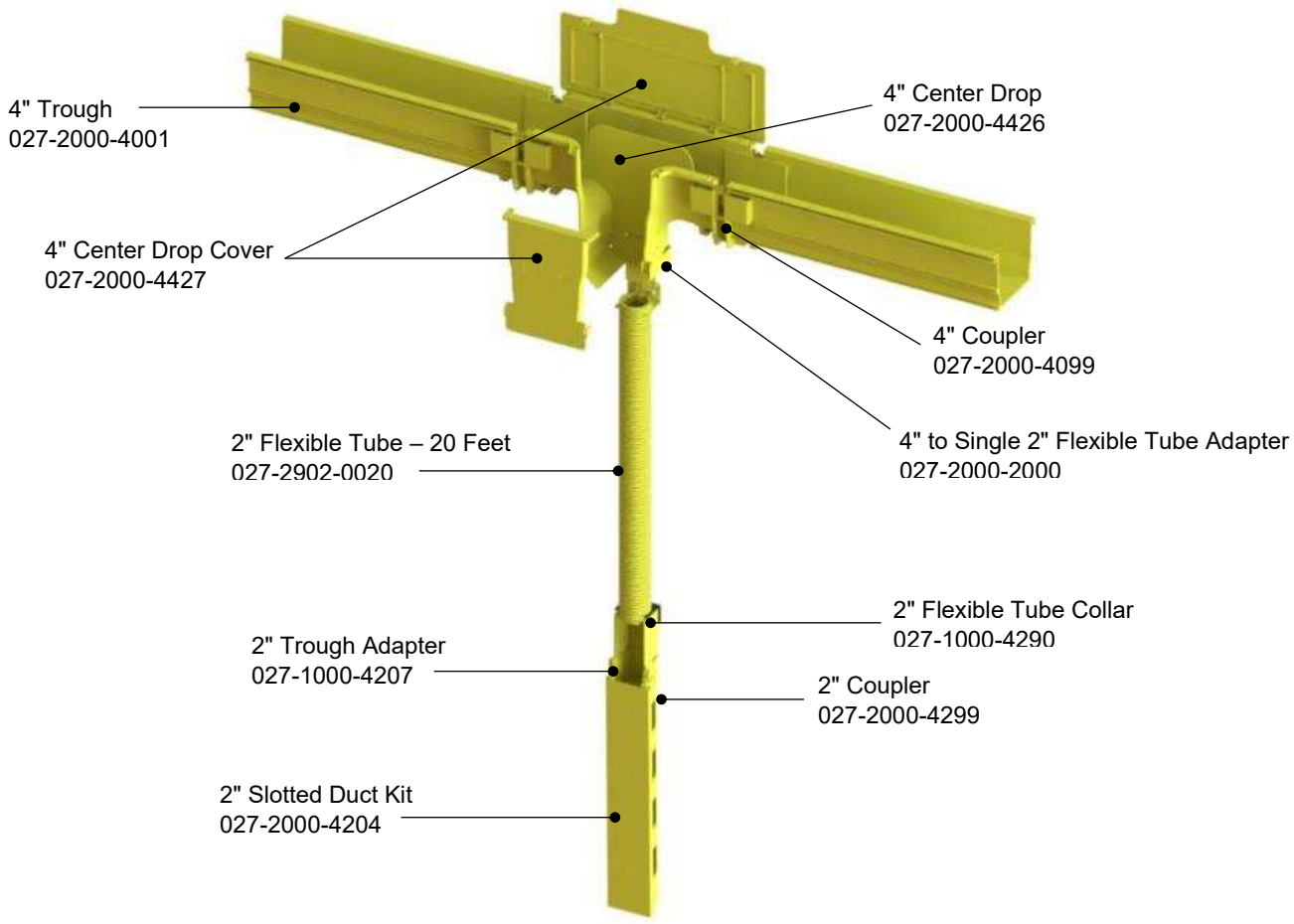

Fig. 1-3: Sample vertical fiber management

NOTE: 027-2902-0020 20-feet flexible tube is sold in 20-foot sections.

Amphenol Network Solutions
All rights reserved. 150727 A4 06.11.2026
1.509.926.6000 — amphenol-ns.com

1.4 Types of Components

This section provides an overview of the most common components that make up a WaveTrax® fiber raceway system, outlining their function and typical application within a complete pathway solution.

1.4.1 Trough

Straight Trough is the primary pathway for carrying fiber optic cable. It is available in 6-foot and 10-foot lengths and can be field-cut to the required length.

For proper support, install a bracket at each coupler connection point on both ends of the trough. In addition, provide mid-span support every 4 feet using a sliding bracket mounted to a standard bracket.



Fig. 1-4: Trough

1.4.2 Covers

Covers are available for all troughs, transitions, and drops to help protect fiber optic cables. Designed for quick and simple installation, the covers snap on securely without the need for additional hardware.



Fig. 1-5: Center drop cover

1.4.3 CableLinks

Use CableLinks® modules to add both horizontal and vertical articulation to your cable pathway. CableLinks® are ideal for positioning an off-center cable drop precisely where an enclosure requires it, and for navigating horizontally through tight spaces where HVAC, plumbing, electrical conduit, or other facility structures prevent long, straight runs.

CableLinks® connect to WaveTrax® trough using one of four available adapters for a secure and seamless transition.

For proper support, CableLinks® should be bracket-supported every 2 feet along horizontal runs



Fig. 1-6: CableLinks

Amphenol Network Solutions
All rights reserved. 150727 A4 06.11.2026
1.509.926.6000 — amphenol-ns.com

1.4.3 Couplers

Couplers are used to connect trough sections to one another or to other components, such as intersections or CableLinks® adapters, creating a continuous and secure fiber pathway.



Fig. 1-7: FastLock coupler

1.4.4 Horizontal Transitions

A transition is any component that adds to or branches off the trough's path. Transitions are used to expand the cable routing system or create additional pathways.

A T-transition attaches to a trough or other components using a coupler. Each transition is designed with two locking pins (located on the top of either side of the trough) and integrated teeth (on the exterior bottom and sides of the trough). These features allow a coupler or other compatible component to snap together easily and securely, ensuring a firm and reliable connection.



Fig. 1-8: T-transition

1.4.5 Vertical Turns

A turn is any component that changes the direction of the trough's path. Turns are used to route cables around obstacles or shift direction while maintaining system continuity.

Common turn components include:

- 45° horizontal elbow
- 45° up elbow
- 45° down elbow
- 90° up elbow
- 90° down elbow

Each turn attaches to the trough or other system components using a coupler, ensuring a secure and aligned connection.



Fig. 1-9: 90° Up elbow

Amphenol Network Solutions
All rights reserved. 150727 A4 06.11.2026
1.509.926.6000 — amphenol-ns.com

1.4.6 Reducers

Use a reducer to change trough widths within a cable routing system. A reducer connects inline and attaches with a coupler at either end, allowing a smooth transition between different trough sizes.

For larger sizes (4″ reducers and above), pinned components—such as trumpets or adapters—can be attached directly. This provides added flexibility for managing transitions and maintaining proper cable support and bend radius protection.



Fig. 1-10: Reducer

1.4.7 Drop Sections

A center drop fits in line with the trough and connects using a coupler at either end. It allows cables to exit downward from the middle of a straight run while maintaining structural continuity.

A drop attachment converts a horizontal cable path into a vertical drop. It is used where cables need to transition cleanly from a horizontal trough to a vertical descent.

A trumpet provides bend radius protection at transition or exit points. It attaches to the end or side of a trough to guide cables smoothly and prevent sharp bends that could damage the cable.



Fig. 1-11: Center drop

1.4.8 Pin Adapter Attachment

Use a pin adapter on a trough to add the pins and bottom snap feature required by components such as an end cap or trumpet. The adapter attaches to a trough with a coupler.



Fig. 1-12: Pin adapter attachment

Amphenol Network Solutions
All rights reserved. 150727 A4 06.11.2026
1.509.926.6000 — amphenol-ns.com

1.4.9 Express Off-Ramps

Use an Express Off-Ramp to add a 2", 4", or 12" cable exit. It provides a simple way to transition from horizontal to vertical fiber management at any point along an existing horizontal trough. No cutting or notching of the trough is required.



Fig. 1-13: Express off-ramp

1.4.10 Express T Interchange

Use an Express T Interchange to transition to a new horizontal run either anywhere along an existing trough or perpendicular to the current run on the same plane. Installation is quick and tool-free, requiring no cutting. The ratcheting bracket fits standard 4" × 12" horizontal troughs.

For legacy systems, an optical bracket is also available to attach the Express T Interchange to CommScope® FiberGuide®.



Fig. 1-14: Express T interchange

1.4.11 Express Overpass

Use an Express Overpass to transition between two parallel trough sections at the same level, forming an “H” configuration when installed. Installation is quick and tool-free, requiring no cutting. The ratcheting bracket fits 4" × 4", 4" × 6", and 4" × 12" horizontal troughs.



Fig. 1-15: Express overpass

Amphenol Network Solutions
All rights reserved. 150727 A4 06.11.2026
1.509.926.6000 — amphenol-ns.com

1.4.12 Vertical Cable Management

Vertical cable managers are used in server racks and cabinets to route, protect, and organize small or large bundles of cables vertically along the side of the equipment. They range from compact 0U units for small setups to high-density, double-sided systems for data centers

Common Vertical cable manager components include:

- Slotted Duck
- CableLinks
- FlexTrax

Use 2" Split Tube, 2" or 4" Slotted Duct, or any size CableLinks® for vertical cable management.

- Split Tube attaches to WaveTrax® trough using a single or dual split tube adapter.
- Slotted Duct connects via a coupler.
- CableLinks can be attached using the appropriate adapter.

These options provide flexible solutions for guiding fiber vertically while maintaining secure and organized pathways



Fig. 1-16: Slotted Duct

1.4.13 Alternative System Adapters

Use a Competitive Adapter to transition from select competitor troughs and transitions to WaveTrax®. The competitor end of the adapter connects to the existing competitor transition, while the other end attaches to WaveTrax troughs.

- The 2" Competitive Adapter requires a 2" coupler for connection.
- 4" Competitive Adapters and larger attach directly to WaveTrax troughs.

This provides a simple, tool-free way to integrate WaveTrax into existing installations from other manufacturers.



Fig. 1-17: Competitive adapter

Amphenol Network Solutions
All rights reserved. 150727 A4 06.11.2026
1.509.926.6000 — amphenol-ns.com

1.5 Basic Design Concepts

1.5.1 Overhead and Underfloor Design

Overhead **Cable Management Systems (CMS)**, such as **WaveTrax®**, route large volumes of data and power cables above server racks to maximize floor space and improve airflow. Off-ramps and drop sections direct cables down into the equipment racks for organized routing and termination.

Troughs are typically mounted a minimum of seven feet above the server racks to maintain proper clearance and accessibility. While most central offices utilize an overhead CMS, under-floor systems are also common.

An ideal trough pathway would follow a straight run, dropping or rising into racks as required, then making a single turn to service another row of racks.

In practice, however, straight paths are often impossible. Equipment racks may be dispersed throughout the space, HVAC ducting may cross the desired route multiple times, and existing fire sprinkler systems or electrical conduit may require numerous adjustments to the pathway.

1.5.2 Trough Size

Selecting the proper main trough width depends on how much cable you have now, how much you expect to add in the future and how much will be in the same trough. If all cable enters the facility from one location and travels to only a row of equipment racks, ensure the main trough is wide enough to accommodate all the cable. If the cable enters from two locations and each serves a different row of equipment racks, each main trough must only accommodate half the total facility cable. If two troughs cross at an intersection, ensure the combined cable load does not exceed the maximum for that size of trough.

If a trough divides into runs requiring less cable-carrying capacity, use a reducer to switch to a smaller trough width.

In areas with extreme height restrictions, use transitional components like an intersection, elbow or reducer to convert down to multiple 2" troughs that together can carry at least the same fiber capacity as the larger originating trough. Fig. 1-18 shows a 4" trough on the left converted into three 2" troughs on the right.

WaveTrax trough capacities are listed in Section 6.1 “Trough Capacity” on page 78.



Fig. 1-18: 4" trough converted to three 2" troughs

Amphenol Network Solutions
All rights reserved. 150727 A4 06.11.2026
1.509.926.6000 — amphenol-ns.com

1.5.3 Changing the Path

When the trough path requires a change in height, try to use a 45° up elbow and 45° down elbow instead of two 90° up elbows (one used to turn up, one to turn down), as this provides a straighter path and keeps cable from falling out of the vertical trough as the cable pile increases.

When the trough path requires a left or right turn, and you expect the trough to carry over half its capacity, use 45° elbows for a straighter path.

To accommodate compound turns or negotiate a particularly cramped path, consider converting that portion of the trough to CableLinks of FlexTrax articulating trough, which easily adjusts to accommodate both horizontal and vertical path changes. See Section 4 Vertical Components on page 63.



Fig. 1-19: CableLinks vertical path change

1.5.4 Mounting to Auxiliary Framing and Ladder Rack

Auxiliary framing and cable racks provide the most common means of support for an overhead trough. After attaching an all-thread kit to a cable rack, you can set the trough support bracket at the precise height required.

You can mount the all-thread kit, so it stands above the mount or hangs below, whichever better suits your installation requirements.

The Amphenol Network Solutions all-thread kit and universal bracket (shown at right) both mounts directly to a threaded rod without having to slide them down the entire length of the rod or remove existing components already bolted to the end, a feature especially timesaving when using existing threaded rod.

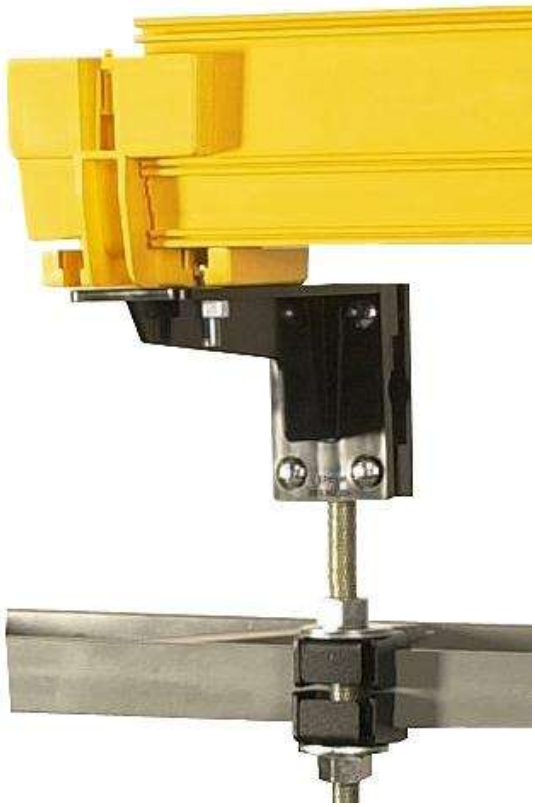

Fig. 1-20: All-thread kit and universal bracket

Amphenol Network Solutions
All rights reserved. 150727 A4 06.11.2026
1.509.926.6000 — amphenol-ns.com

When working with grid cable racks you will want to mount the trough below the grid because of the difficulty in routing vertical drops through the grid. Since the grid is normally positioned within a few inches of an equipment rack, it may only leave room for 2" trough between the grid and the rack, forcing the larger trough to run in the main aisle.

1.6 Exiting the Trough

There are different ways to exit a trough:

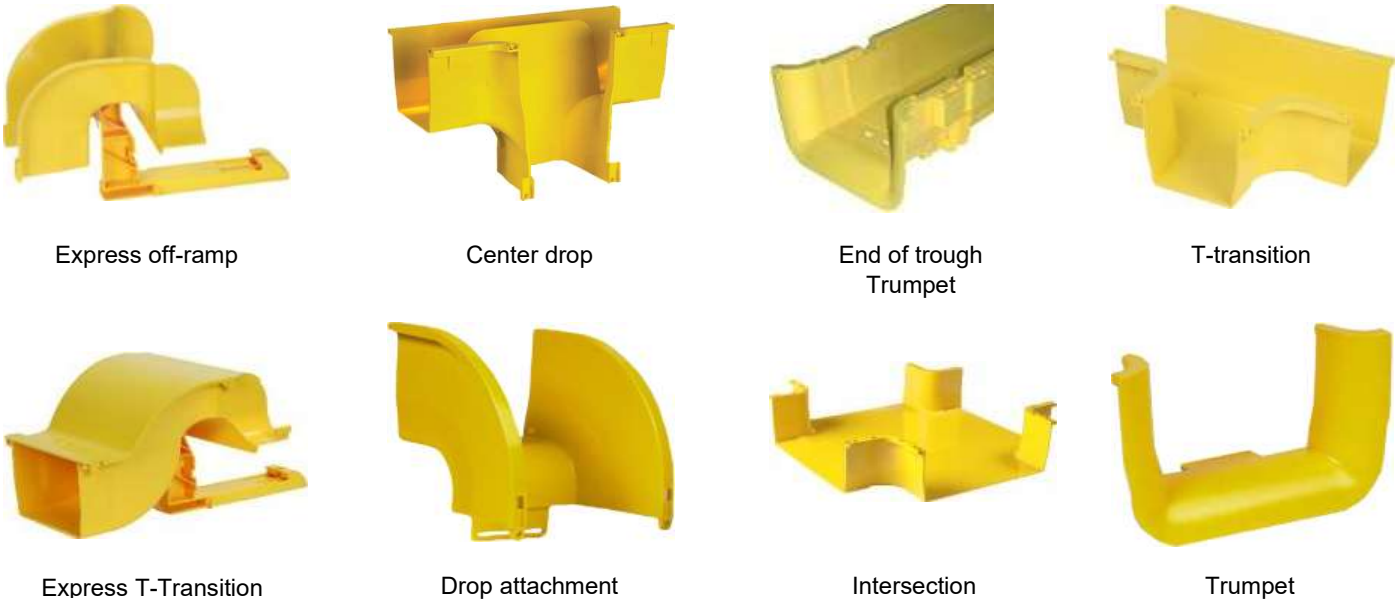

Fig. 1-21: Trough exits

The center drop, intersection, T-transition, drop attachment or trumpet are best suited to new installations since they are installed in line with the trough using couplers.

The off-ramps and end-of-trough exits do not require any modification of existing trough and are ideal for use when expanding an existing installation.

After installing one of the above, guiding the cable down from the exit is called vertical cable management. Whenever possible, cable drops should be enclosed in one of the following to at least the top of the equipment racks:

- CableLinks or rigid trough
- FlexTrax
- Split tube
- Slotted duct’

See Section 4 “Installing Vertical Components” on page 63 for step-by-step instructions on how to integrate drops and vertical cable management into your trough design.

Amphenol Network Solutions
All rights reserved. 150727 A4 06.11.2026
1.509.926.6000 — amphenol-ns.com

1.7 Sample Applications

The following photos are of real WaveTrax and CableLinks applications. Lists of components used follow those shown in the accompanying photo from left to right. Some components, such as couplers, are used more than once in one application photo.

Converting WaveTrax to CableLinks

Components used:

027-2000-12450 – Reducer, 12" to 6"
027-2000-6499 – FastLock Coupler
027-1000-6490 – Adapter, Coupler to CableLinks, adjustable
027-0000-6400 - 6" CableLinks modules



Dropping into a bay or rack using an Express Off-Ramp with Split Tube

Components used:

027-2000-6401 - 6" Trough
027-2000-4262 - 2" Express Off-Ramp
027-2902-0020 - 2" Flexible Split Tube



Dropping into a bay or rack using an Express Off-Ramp with dual Split Tube

Components used:

027-2000-6401 – 6" Trough
027-2000-4062 – 4" Express Off-Ramp
027-2000-4016 – Dual Flexible Split Tube Adapter
027-2902-0020 – 2" Flexible Split Tube



Amphenol Network Solutions
All rights reserved. 150727 A4 06.11.2026
1.509.926.6000 — amphenol-ns.com

Intersecting run using Express Interchange

Components used:

027-2000-12406 – 12" Trough (x2)
027-2000-12412 – 4" x 12" Express Interchange
027-2000-12499 – 12" Coupler



Intersecting run on a alternative system using Express Interchange

Components used:

Existing legacy 12" Trough
027-2000-6412 – 4" x 6" Express T Interchange, with Compatible 12" Bracket
027-2000-6419 – 6" Coupler
027-2000-6401 – 6" Trough



Amphenol Network Solutions
All rights reserved. 150727 A4 06.11.2026
1.509.926.6000 — amphenol-ns.com

1.8 Site Survey

1.8.1 Overview

A site survey is required to determine the layout of your facility and how best to route WaveTrax troughs to serve it.

A site survey includes sketching out the layout of your facility, taking general measurements and listing the expected components required. With this information, an Amphenol Network Solutions engineer can create a quote for parts and installation, as well as time to delivery.

When you design your own layout, keep in mind not only your current fiber needs but your future fiber needs as well. Use a trough width that can handle your facility's maximum fiber capacity. Keep in mind, Express Interchanges can be added later to accommodate future branches off your main trough. It is recommended to order extra 6-foot or 10-foot trough lengths and couplers to account for miscuts and extra junctions.

1.8.2 Requirements

A site survey needs to include the following information:

1. A completed checklist (See Section "1.8.4 Site Survey Checklist" on page 20.)
2. A sketch of the facility layout, including all bays, racks and potential obstructions. Amphenol Network Solutions needs current floor plan facility drawings as they show equipment, auxiliary framing and cable rack locations.
3. A sketch of the intended trough route, sizes, height changes, support points, rack heights and types of drops.
4. A list of other pertinent information or special instructions, such as expectations for future expansion, racks that may be removed or replaced, new racks to be added later or alternate scenarios that may arise.

1.8.3 Conducting the Survey

Begin your survey with a close examination of your facility and sketch its layout. Ideally, start with a CAD drawing of your facility floor plan, then overlay it with Visio™ SmartShapes® (www.amphenol-ns.com) for dimensionally accurate trough layout.

If a CAD drawing is not available, measure off the room and create your own drawing. If you are skilled in the use of a graphics software program, you may find that software useful at your facility.

1. Using a tape measure, record distances, and then sketch the size and location — within an inch is sufficient accuracy — of every rack or bay to be serviced. Include aisle numbers, bay numbers, which side is the front and the dimensions of the room. If a bay is not to be serviced, include it in your drawing but note accordingly.
2. Note any equipment you expect to replace and what it will be replaced with. This is important for estimating trough capacity requirements.
3. Draw in any new equipment you expect to add to the system including bays, patch cords and estimated additional fiber requirements.
4. Note the quantity and location of existing patch cords.
5. Note the location of obstacles. Use a ladder, if necessary, to obtain actual line-of-sight above equipment racks to ensure that existing infrastructure such as support wires, posts, racks and HVAC ducting will not compromise your planned trough path. If adding covers, ensure sufficient clearance will remain for opening hinged covers.
6. With the Site Survey and drawing of your facility complete, make a few copies of your drawing to continue with, saving the original in case you need more.

Amphenol Network Solutions
All rights reserved. 150727 A4 06.11.2026
1.509.926.6000 — amphenol-ns.com

7. Draw in the complete WaveTrax path as if it were one continuous trough, preferably in a width relative to the other items in the drawing. Make sure you place it accurately in relation to existing support structures like auxiliary bars and cable racks. If height changes are required, consider a second side-view drawing showing vertical path changes.
8. Mark transitions such as Ts, intersections, turns and elbows. You may find it advantageous to use symbols and write a key.
9. Draw in drops and indicate if they will be Express Off-Ramps or the traditional drop style. For example, a drop from an intersection may only be the addition of a trumpet but dropping a trough from an intersection to an offset bay would require a drop attachment, CableLinks adapter, and several CableLinks modules, plus other components if bend radius protection is required at the exit.
10. Draw in any new auxiliary framing or cable racks required.
11. Note where the trough will be mounted, system height (from the floor to the top of the mounting bracket) and types of support hardware required. (See Section 2 “Installing Support Brackets” on page 22.) As with trough components, you may find it advantageous to use symbols and write a key.

    Since most support brackets can mount to infrastructures already in place, note whether the trough will be supported from a rod or cable rack already in place or if new threaded rod kits or cable racks are required for new mounting locations; often it will be a combination of the two.
12. Assuming the system designer will not be able to visit your site, make a bullet list of any additional information he or she would need to know, such as:
    - Name and address of the installation site (add to all pages of the site survey)
    - Potentially complicated portions of the site survey sketch
    - Special traits of obstacles, such as minimum clearance or object movement
    - Potential changes: equipment to be pulled, new equipment arriving, racks that should not be serviced, expected changes in capacity, etc.
    - Special site requirements
    - Any other considerations

1.8.4 Amphenol Network Solutions Review

You can design, order and install your WaveTrax cable management system completely yourself. However, if you would like an Amphenol Network Solutions Application Engineer to review your design work, including system sketch, survey checklist and materials list, contact Amphenol Network Solutions Application Engineering by email at support@amphenol-ns.com or by phone at 1-509-926-6000. We will review your system design and offer comments and suggestions to make your ordering and installation as accurate and complete as possible.

Amphenol Network Solutions
All rights reserved. 150727 A4 06.11.2026
1.509.926.6000 — amphenol-ns.com

1.8.5 Site Sketch Example

The following site sketch examples were produced in Visio.

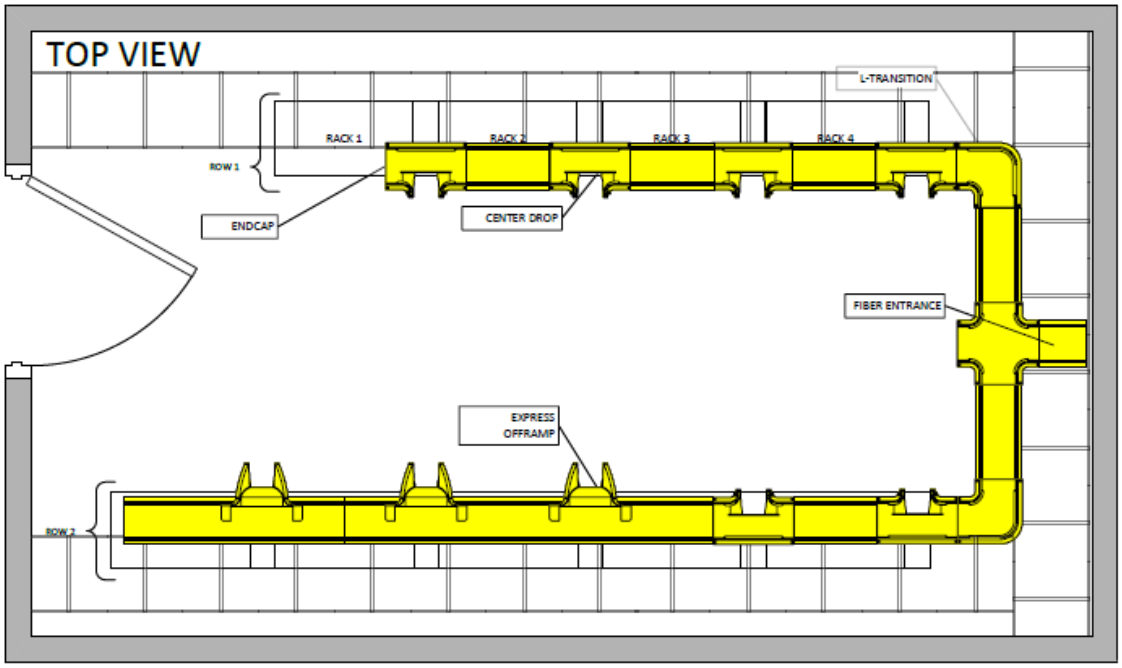

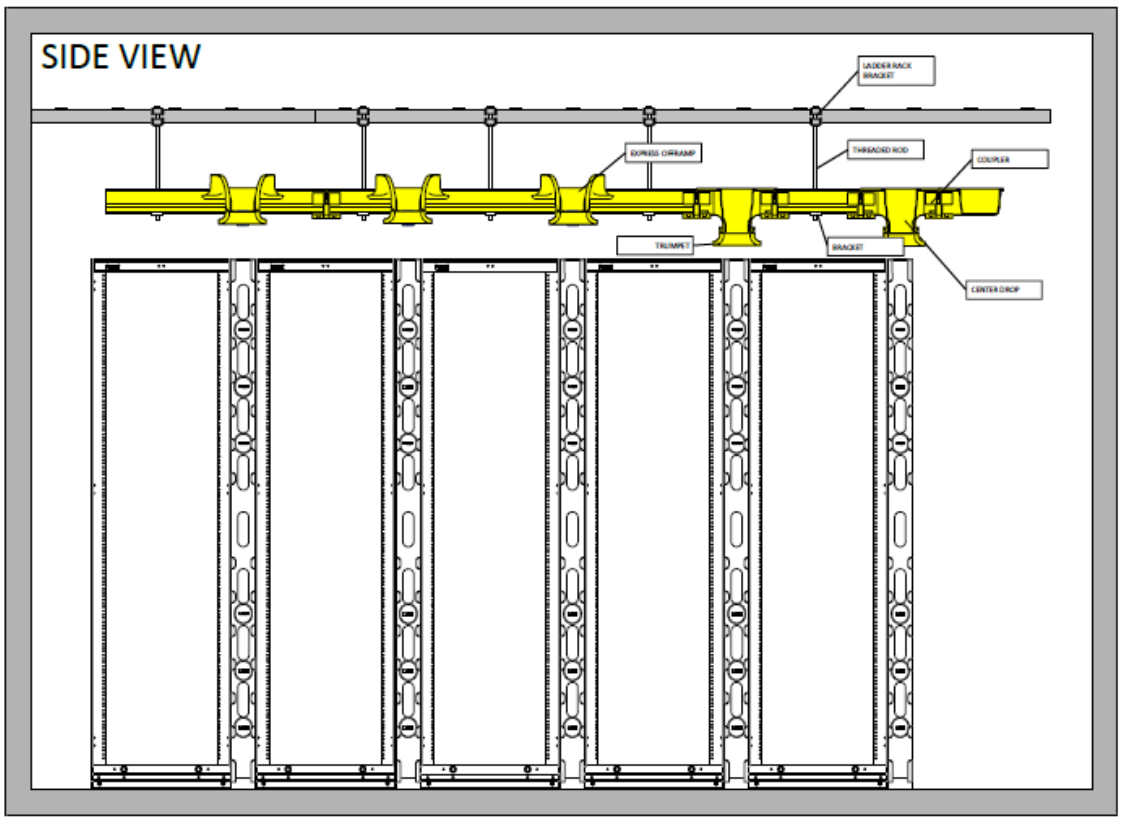

Fig. 1-22: Visio site sketch

Amphenol Network Solutions
All rights reserved. 150727 A4 06.11.2026
1.509.926.6000 — amphenol-ns.com

Section Two: Installing Support Brackets

Support WaveTrax directly under a coupler or under the trough within one foot of a coupler. The span between brackets should be a maximum of 4’.

Support WaveTrax Express interchanges at the coupler connecting the trough. The Express Overpass does not require additional brackets when attaching to properly installed trough.

In some cases, connecting components may be so close together that supporting each one is neither practical nor necessary. For example, when a center drop is connected directly to an intersection, the connecting coupler does not require a bracket if the couplers on the opposite ends of the center drop and intersection already have one.

Support 2" and 4" CableLinks modules a minimum of every three feet, 6" modules a minimum of every two feet and all sizes at transitions.



Fig. 2-1 Support bracket and hardware

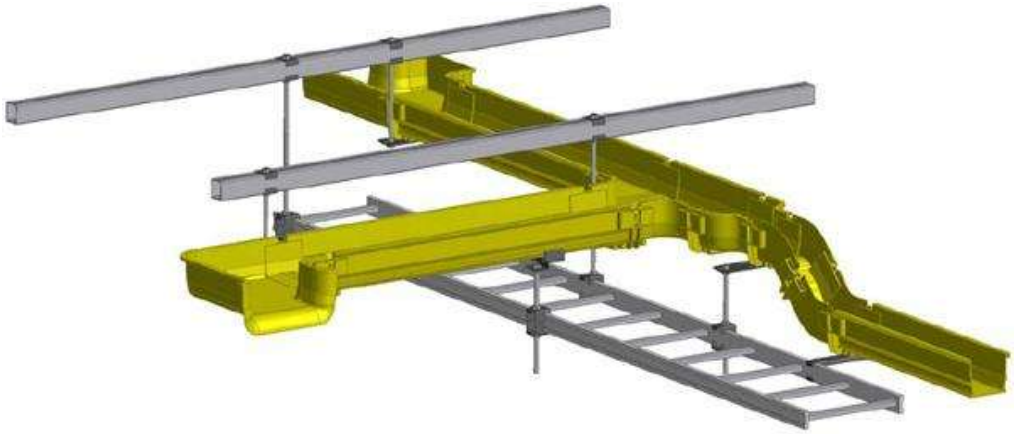

Fig. 2-2: Trough support system

Amphenol Network Solutions
All rights reserved. 150727 A4 06.11.2026
1.509.926.6000 — amphenol-ns.com

2.1 Common Support Brackets

The most common means of supporting a WaveTrax trough, CableLinks modules or slotted duct is by using a threaded rod kit to hang or stand a threaded rod from existing cable rack, then attaching a bracket to the rod for the trough to rest on. Amphenol Network Solutions stocks several different types of brackets to provide secure mounting for different configurations of threaded rod on a cable rack or rail, floor support, equipment rack face and wall. If you can plan your trough to run adjacent to an existing row of threaded rods, you can add brackets to those rods instead of installing more.

The brackets shown in the following section are listed in order of most commonly used to least used and include all hardware shown. Couplers mount to brackets; add a center trough bracket for mid-span support. While the section shows brackets supporting WaveTrax trough, with the exception of the center trough bracket, all brackets also fit CableLinks modules.
If you need to mount brackets to a facility structure not specified in the following table, contact Amphenol Network Solutions Technical Support at support@amphenol-ns.com or call us at 1-509-926-6000.



Fig. 2-3: Universal bracket

Amphenol Network Solutions
All rights reserved. 150727 A4 06.11.2026
1.509.926.6000 — amphenol-ns.com

2.1.1 Threaded Rod Bracket

The threaded rod bracket supports the trough from a threaded rod at adjustable heights. Use with the threaded rod kit.

1. Insert the two (2) $^{3}/_{8}$-16 hex bolts into the bottom piece of the FastLock Coupler.
2. Take the support bracket and feed the two $^{3}/_{8}$-16 hex bolts through the bracket openings.
3. While holding the support bracket, line up the bracket and place around the U-shaped opening.
4. Line up the bracket retainer with the bracket and threaded rod. Make sure the locking tab and opening are aligned.
5. Insert the retainer locking tab into the tab opening.
6. Take the two (2) $^{3}/_{8}$-16 hex nuts and tighten on the bracket.
7. Tighten the threaded rod washers and nuts to secure the bracket to the threaded rod.
8. Install cap-plug covers on the bottom of $^{3}/_{8}$-16 hex bolts.

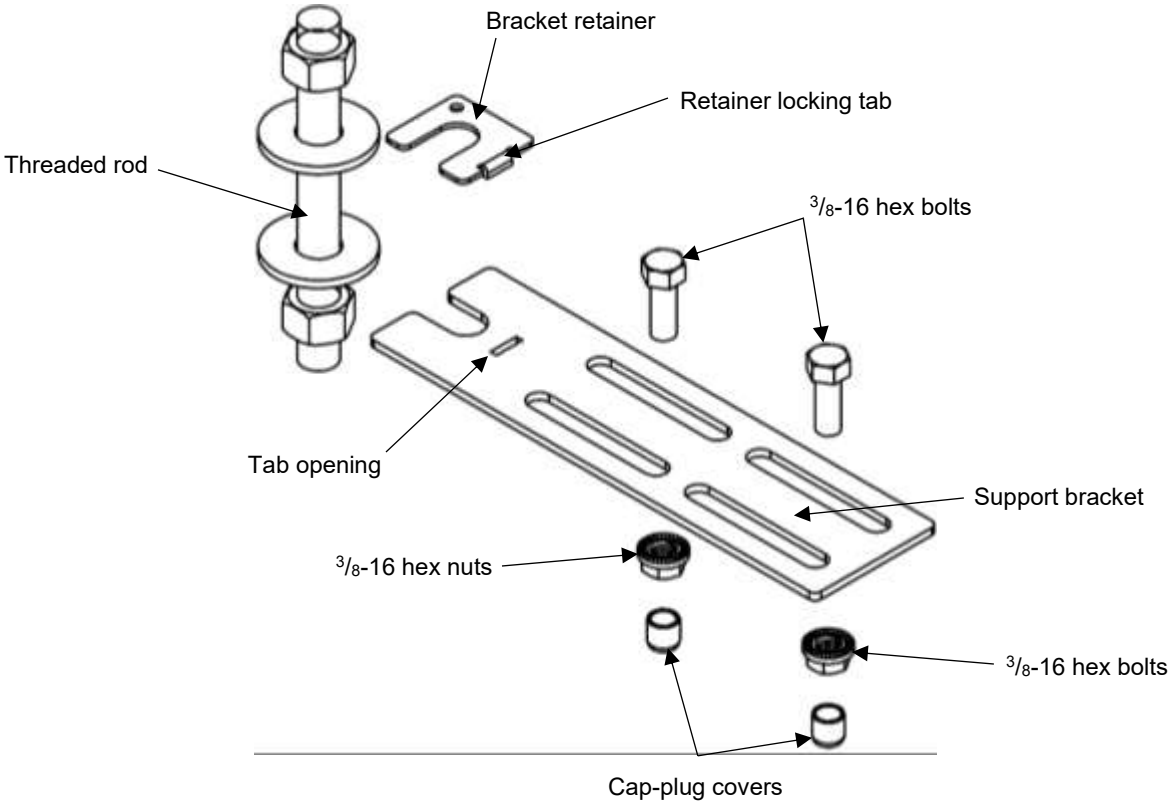

Fig. 2-4: Threaded rod bracket

Amphenol Network Solutions
All rights reserved. 150727 A4 06.11.2026
1.509.926.6000 — amphenol-ns.com

2.1.2 Universal Bracket

The universal bracket mounts to the threaded rod, cable rack or vertical surface to support channels at adjustable heights. Use with a threaded rod kit for threaded rod mounting.

1. Fit the clamp and bracket around the threaded rod.
2. Feed the four (4) 1/4-20 bolts into the clamp, on either side of the threaded rod.
3. Move the clamp and bracket to the desired location. Loosely tighten the four (4) 1/4-20 hex nuts so the clamp can still be adjusted on the threaded rod.

   NOTE: Do not fully tighten so you can adjust if needed.
4. Insert the two (2) 3/8-16 hex bolts into the bottom piece of the FastLock Coupler.
5. Adjust the height of the bracket to align the 3/8-16 hex bolts through the bracket openings.
6. Once aligned, tighten down the four (4) 1/4-20 bolts with the four (4) 1/4-20 nuts already attached.
7. Tighten the two (2) 3/8-16 hex bolts with the two (2) 3/8-16 hex nuts.
8. Place the four (4) .218 x .375 cap-plug covers on the ends of the four (4) 1/4-20 bolts.
9. Place the two (2) .343 x .500 cap-plug covers on the ends of the two (2) 3/8-16 hex bolts.

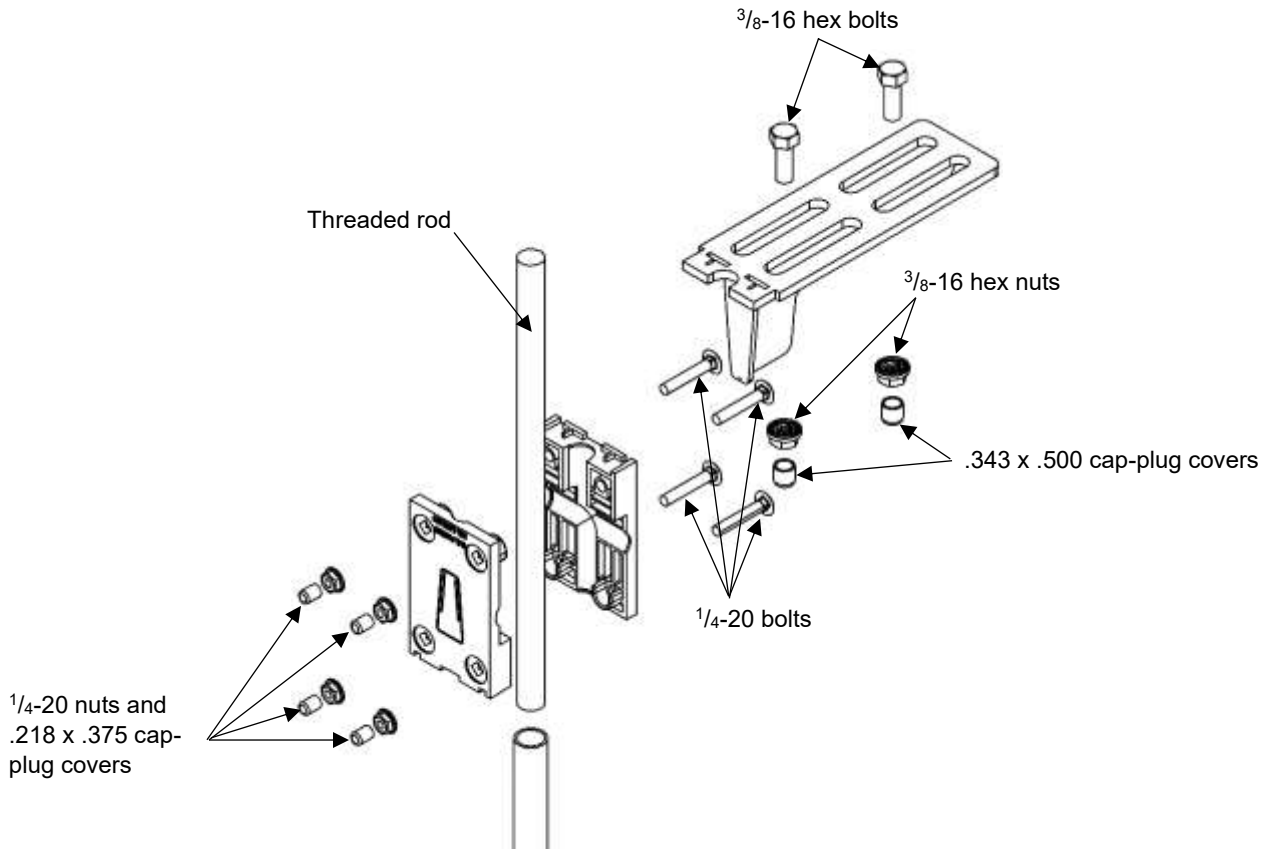

Fig. 2-5: Universal bracket

Amphenol Network Solutions
All rights reserved. 150727 A4 06.11.2026
1.509.926.6000 — amphenol-ns.com

2.1.3 Threaded Rod Kit

The threaded rod kit mounts to most styles of cable racks and auxiliary bars. Includes $^5/_8$ x 18" threaded rod, clamshell brackets and hardware. Use with the appropriate bracket.

The clamshell bracket can be ordered separately (P/N 027-1000-4103).

1. Locate the desired position on the ladder rack to install the threaded rod kit.
2. Use the $^5/_8$" flat washer, $^5/_8$" lock washer and $^5/_8$-11 hex nut to install the clamshell bracket to the ladder rack.
3. Adjust the height of the threaded rod to the desired vertical position.
4. Tighten down the hardware to secure the clamshell bracket to the ladder rack.

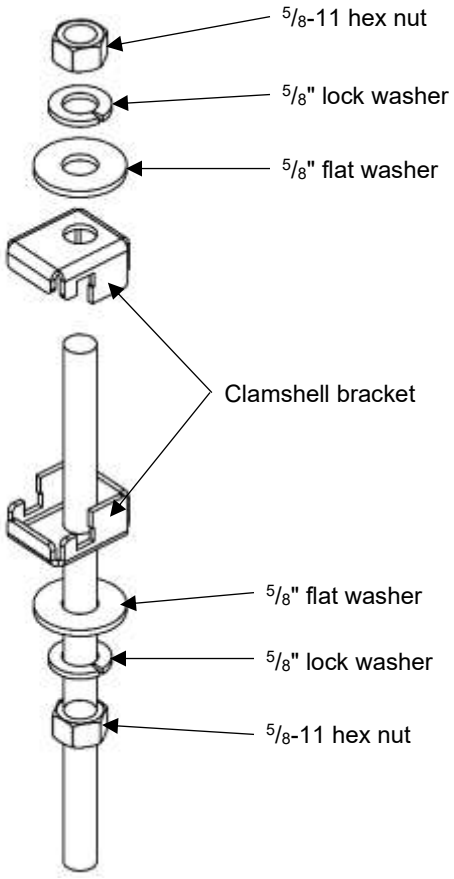

Fig. 2-6: Threaded rod kit

Amphenol Network Solutions
All rights reserved. 150727 A4 06.11.2026
1.509.926.6000 — amphenol-ns.com

2.1.4 Trough Support Clamp (Mighty Clamp)

Two sliding catches mount directly to most brackets and attach to the trough as a mid-span support. Order the appropriate bracket separately.

NOTE: Mighty clamp (P/N 027-2000-4060) comes with the order of most support brackets.

1. Place the two (2) clamps on the bracket.
2. Feed two (2) of the $^{3}/_{8}$-16 hex bolts into each clamp and through the bracket openings.
3. Adjust both clamps to the desired position. Tighten the four (4) $^{3}/_{8}$-16 bolts with the four (4) $^{3}/_{8}$-16 hex nuts.

NOTE: Do not fully tighten. Adjusting the position of the clamps may be needed.

4. Once the clamp is in the desired position, tighten down the hex nuts to secure the mighty clamp, locking the trough in-place.

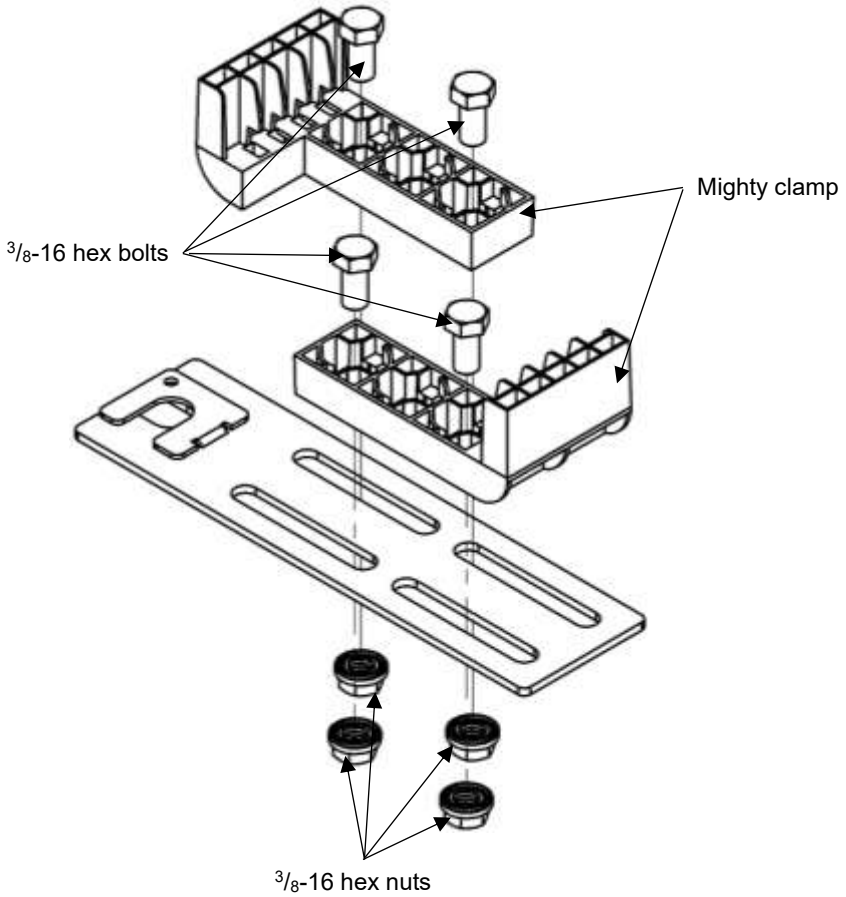

Fig. 2-7: Trough support clamp (mighty clamp)

Amphenol Network Solutions
All rights reserved. 150727 A4 06.11.2026
1.509.926.6000 — amphenol-ns.com

2.1.5 Adjustable Bracket

The adjustable bracket supports the trough from a flat surface. Often used for trough or CableLinks traveling vertically down the front of an equipment rack.

1. Attach the bottom piece of the bracket to the desired location on the equipment rack using the two (2) 12-24 x 1/2 screws.
2. Join the bottom and top pieces of the bracket together. Adjust the height to the desired position.
3. Using the 1/4" flat washer and 1/4-20 hex bolt, insert the bolt into the threaded nut.
4. Once in the correct position, tighten the bolt to secure the bracket.
5. Snap the bottom piece of the 2" FastLock Coupler into the openings on the top piece of the bracket.

NOTE: If installing a 4" coupler, use the bolts provided to attach bottom piece of the coupler to the top piece of the bracket.

NOTE: Drawing depicts a 2" bracket.

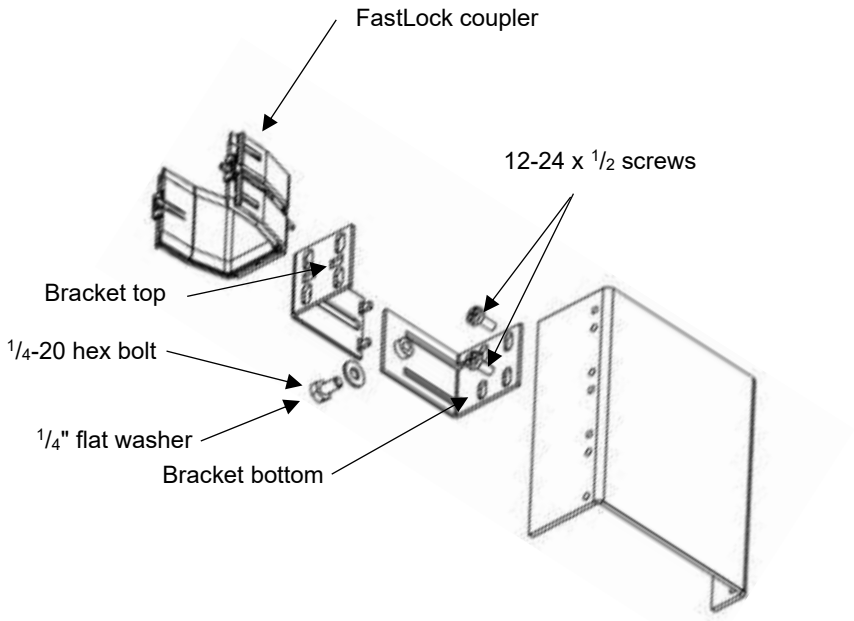

Fig. 2-8: Adjustable bracket

Amphenol Network Solutions
All rights reserved. 150727 A4 06.11.2026
1.509.926.6000 — amphenol-ns.com

2.1.6 Center Support Bracket

The center below bracket supports the trough directly above the threaded rod. Use with a threaded rod kit.

1. Fit the center support bracket onto the threaded rod and position appropriately.
2. Tighten down bracket with the washer and hex nut provided with the threaded rod kit.
3. Feed the two (2) $^{3}/_{8}$-16 hex bolts through the mighty clamp or bottom piece of the coupler and through the bracket openings.
4. Tighten the two (2) $^{3}/_{8}$-16 hex bolts with the $^{3}/_{8}$-16 hex nuts to secure the component to the center support bracket.
5. Install the two (2) cap-plug covers on the two (2) $^{3}/_{8}$-16 hex bolts.

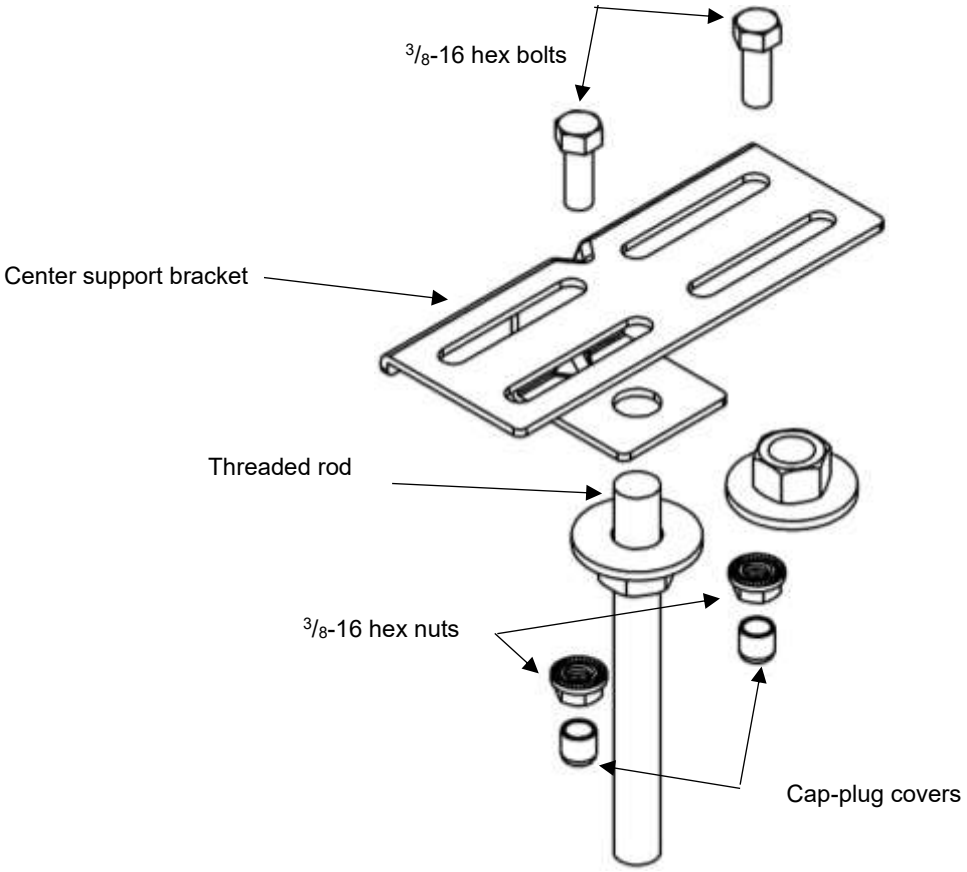

Fig. 2-9: Center support bracket

Amphenol Network Solutions
All rights reserved. 150727 A4 06.11.2026
1.509.926.6000 — amphenol-ns.com

2.1.7 C-Bracket

The C-bracket supports the trough directly below the threaded rod. Use with a threaded rod kit.

1. Attach the top piece of the C-bracket to the threaded rod.
2. Using the hardware provided in the threaded rod kit, adjust the height and secure the top piece of the C-bracket to the threaded rod.

When using WaveTrax

3. Align the bottom piece of the C-bracket to the top piece and insert the four (4) $^{3}/_{8}$-16 bolts and four (4) $^{3}/_{8}$-16 lock washers into desired screw positions. Tighten down to secure.
4. Using two (2) attachment brackets, secure the trough by sliding the brackets into the bottom lip and tighten them with four (4) 10-32 screws.

When using Fiber Channel

5. Align the bottom piece of the C-bracket to the top piece and insert the four (4) $^{3}/_{8}$-16 bolts and four (4) $^{3}/_{8}$-16 lock washers into desired screw positions. Tighten down to secure.
6. Using two (2) ¼-20 T-bolts, two (2) ¼ Flat fender washers and two (2) ¼-20 Knobs align the hardware through openings and rotate the T-bolt 90 degrees, tighten down to secure.

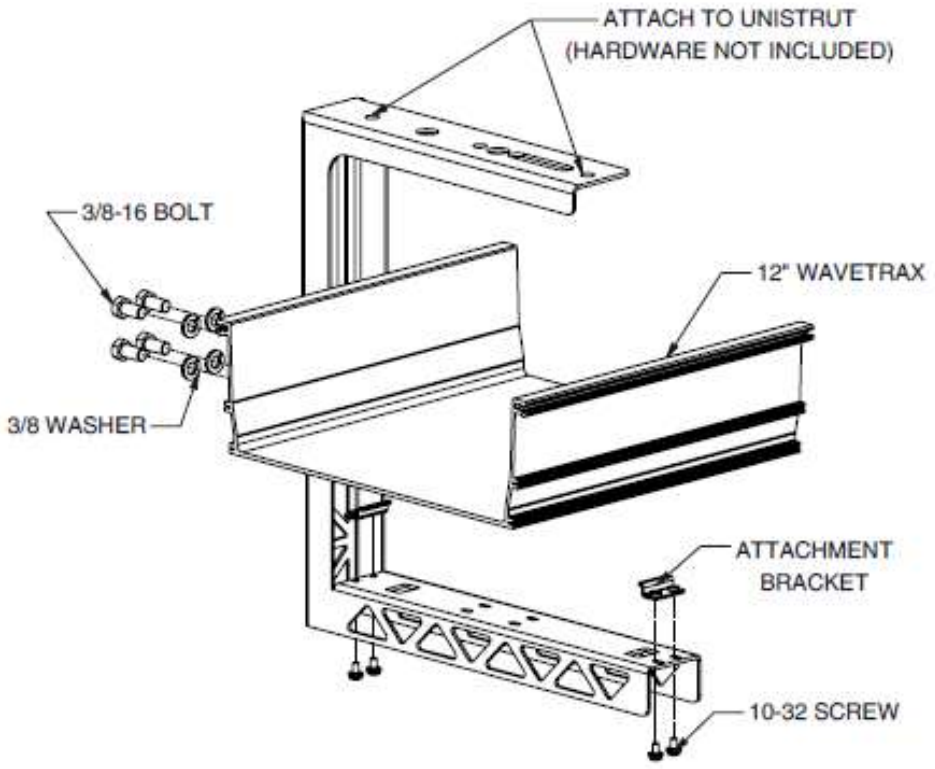

Fig. 2-10: C-bracket

Amphenol Network Solutions
All rights reserved. 150727 A4 06.11.2026
1.509.926.6000 — amphenol-ns.com

2.1.8 Cable Rack Bracket

The cable rack bracket supports the trough level with most racks/auxiliary bars.

1. Take the top and bottom piece of the cable rack bracket, along with the spacer, and fit around the ladder rack or other auxiliary bar.
2. Connect the top and bottom pieces using the 1/4-20 hex bolt. Feed the bolt through the top piece, spacer and bottom piece.
3. Tighten the 1/4-20 hex bolt.
4. Insert the two (2) 3/8-16 hex bolts into the bottom piece of the FastLock coupler.
5. Feed the two (2) 3/8-16 hex bolts through the bracket openings.
6. Adjust coupler to the desired position.
7. Using the 3/8" flat washer, 3/8" lock washer and 3/8-16 hex nut to tighten the coupler to the cable rack bracket.

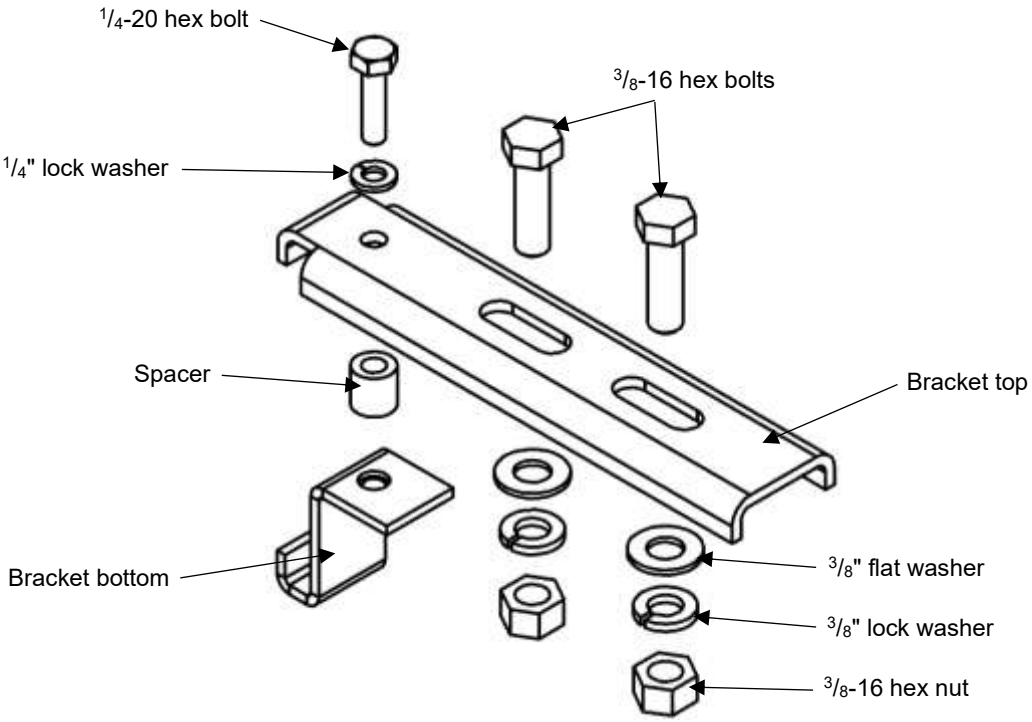

Fig. 2-11: Cable rack bracket

Amphenol Network Solutions
All rights reserved. 150727 A4 06.11.2026
1.509.926.6000 — amphenol-ns.com

Section Three: Installing Horizontal Components

3.1 Inspection

Please read and understand all instructions before starting the installation. If you have questions, contact Amphenol Network Solutions Technical Support at support@amphenol-ns.com or call 1-509-926-6000.

When you receive the equipment, carefully unpack it and compare it to the packaging list. Please report any defective or missing parts to Amphenol Network Solutions Quality at quality@amphenol-ns.com or call 1-509-926-6000. Keep all documentation that comes with your shipment.

Amphenol Network Solutions is not liable for transit damage. If the product is damaged, please report it to the carrier and contact Amphenol Network Solutions.

For service or warranty information, please visit amphenol-ns.com and click on the “Support” tab, email Amphenol Network Solutions at support@amphenol-ns.com or call us at 1-509-926-6000.

ALERT

ALERT! Install this product within a Restricted Access Location (RAL) where access is through the use of a tool, lock and key, or other means of security and is controlled by the authority responsible for the location.

ALERT! This product must be installed and maintained only by qualified technicians.

3.2 Hand Tool Requirements

All WaveTrax horizontal components snap together easily and firmly without any additional hardware. Only a notch is required to prepare the end of a WaveTrax trough to lock into a coupler.

Tools often used during installation:

- $^{5}/_{8}$" socket or wrench
- Adjustable wrench
- Hacksaw/miter box
- Level
- Tape measure
- File or deburr tool
- Flathead and Phillips screwdrivers
- WaveTrax notching tool

Amphenol Network Solutions
All rights reserved. 150727 A4 06.11.2026
1.509.926.6000 — amphenol-ns.com

3.3 Cutting Trough

When working on WaveTrax horizontal trough, there will be times when cutting straight sections are required. Troughs come in six-foot and ten-foot lengths and should be cut to the precise length required. Always use a miter box so the cut remains perpendicular to the trough; otherwise, it may not completely lock into other components. Remove all cuttings and burrs with an appropriate tool prior to connecting to a coupler.

Place the trough in the miter box upside down. Apply only light-to-medium downward pressure on the saw, letting it cut gradually. If you anticipate making a lot of cuts, consider building a custom miter box or adding stops for the wall of the trough that rests in the middle of the box. For 24” trough, a custom box may be required, although the coupler has some room for variability in the cut.

The following shows a custom miter box that accommodates WaveTrax trough sizes; if you are not using the larger trough sizes, build the box narrower for easier cutting.

NOTE: When cutting trough to length, remember that each coupler adds approximately 1" to the trough length.

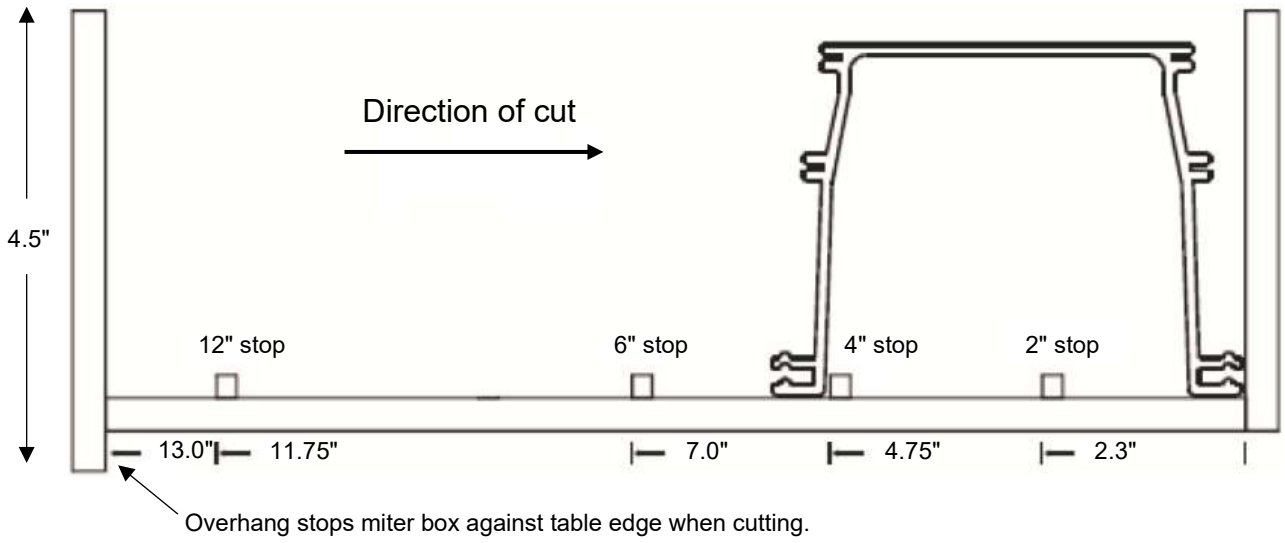

Fig. 3-0: Custom miter box drawing

Amphenol Network Solutions
All rights reserved. 150727 A4 06.11.2026
1.509.926.6000 — amphenol-ns.com

3.4 Notching Trough

Prior to fitting a trough to a coupler, the trough end must be notched so it will stay locked with the coupler.

Use the Amphenol Network Solutions Notching Tool to create trough notches. The Universal Notching tool (027-2000-1101) notches 2” to 24”. Note the below instructions also apply to the 12” slack storage trough

Fig. 3-1: Notching tools

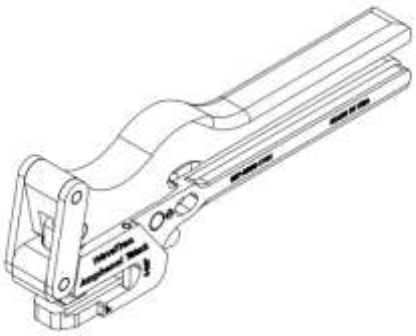

Universal Notching Tool
027-2000-1101

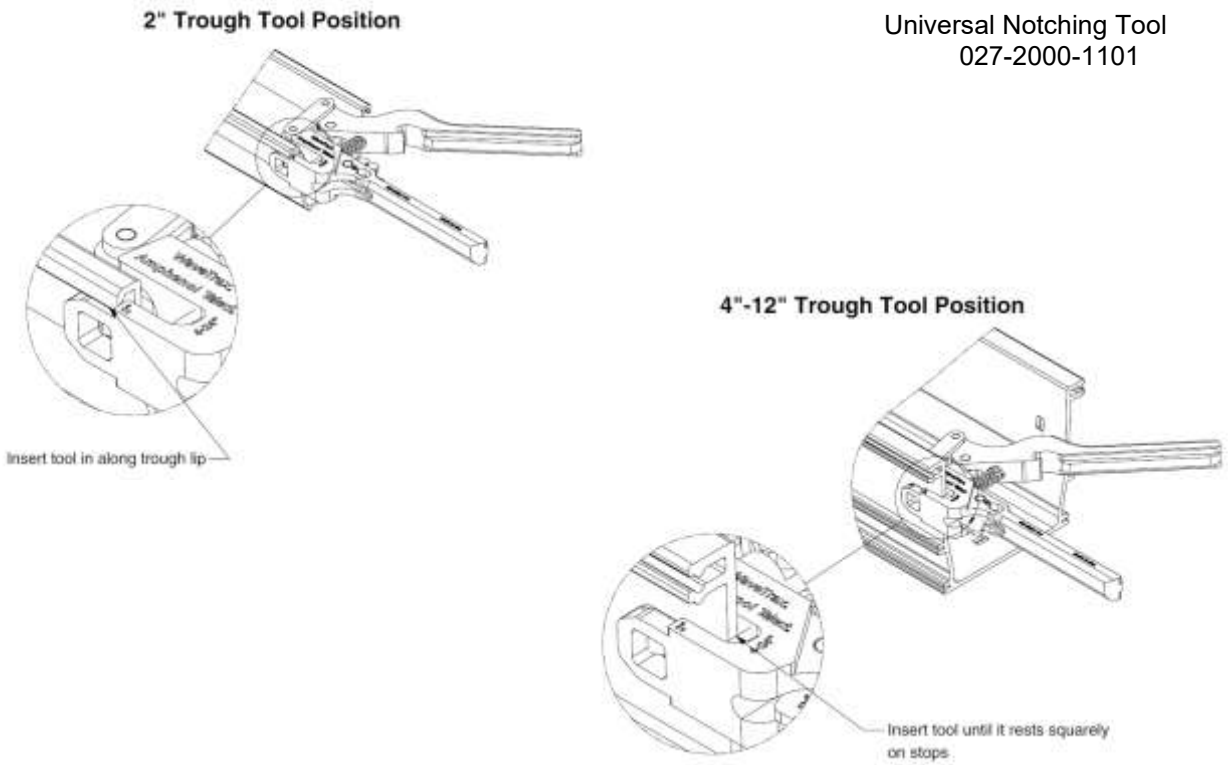

Fig. 3-2: 24” Notching Tool guide

Amphenol Network Solutions
All rights reserved. 150727 A4 06.11.2026
1.509.926.6000 — amphenol-ns.com

Use the guide below to see the quantity and locations of the notches required on each of the trough sizes. The tool creates a ramped notch using the 2” – 24” trough settings and a rectangular cutout using the 24” trough setting.

2" Trough

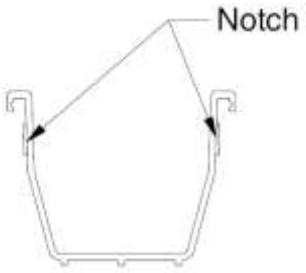

2"-12" Trough Tool Setting

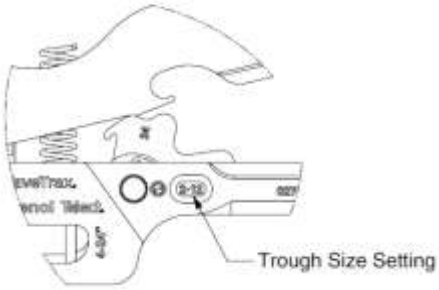

4" Trough

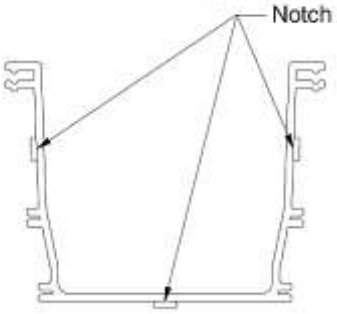

6" Trough

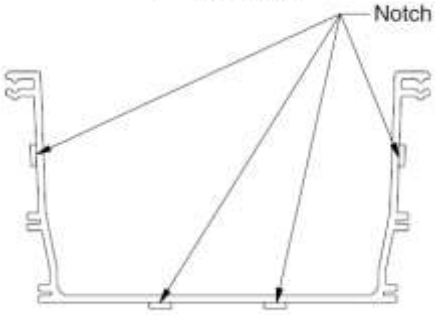

12" Trough

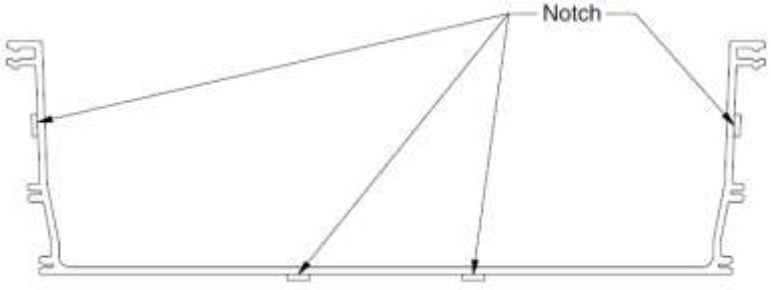

Amphenol Network Solutions
All rights reserved. 150727 A4 06.11.2026
1.509.926.6000 — amphenol-ns.com

24" Trough Tool Setting

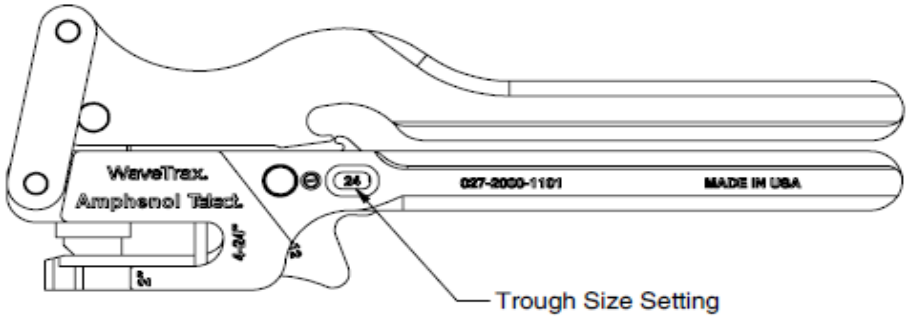

24” Trough Tool Position

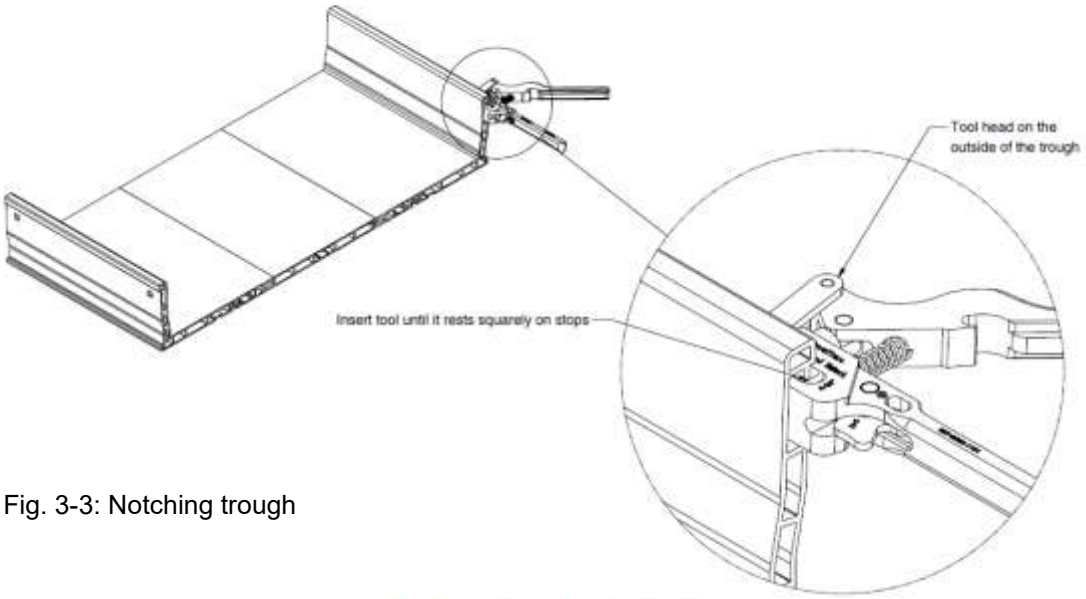

Fig. 3-3: Notching trough

24" Trough Notch Locations

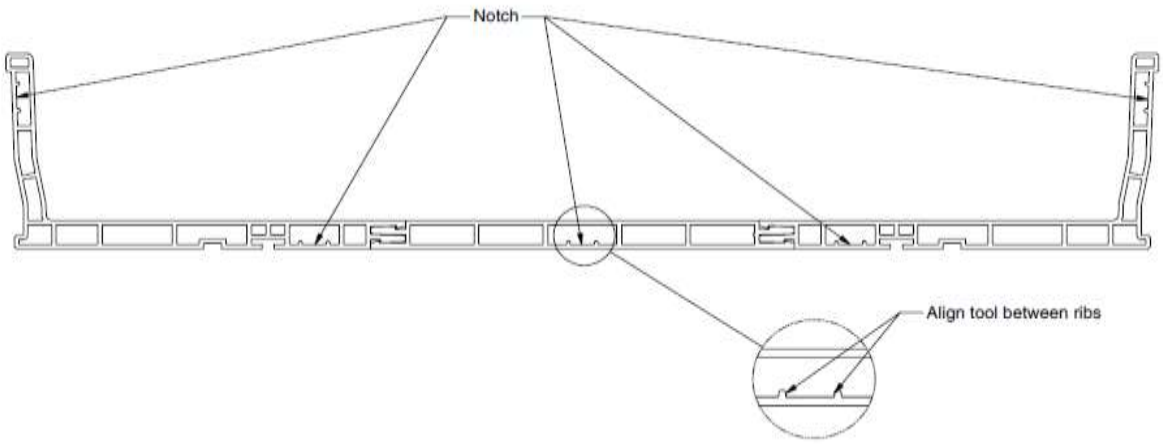

Amphenol Network Solutions
All rights reserved. 150727 A4 06.11.2026
1.509.926.6000 — amphenol-ns.com

3.5 FastLock™ Coupler

The FastLock Coupler connects multiple horizontal components together. By snapping on, the coupler reduces installation time without the use of tools.

The FastLock Coupler attaches all transitions to a trough. Each transition has two locking pins and teeth that allow the coupler the ability to snap components together securely.

3.5.1 FastLock Coupler Components

The coupling kit consists of two parts:

1. Top – The top part of the coupler has two clips on the bottom and a slot on each side to help nest the top and bottom pieces together.



Fig. 3-4: FastLock coupler top piece

2. Bottom – The bottom part of the coupler has four mounting slots and two square holes to receive the clips from the top piece.



Fig. 3-5: FastLock coupler bottom piece

Amphenol Network Solutions
All rights reserved. 150727 A4 06.11.2026
1.509.926.6000 — amphenol-ns.com

3.5.2 Assembling the FastLock Coupler

To assemble the coupling kit, follow these steps:

1. Locate the two slots on the inside of the coupler bottom piece.

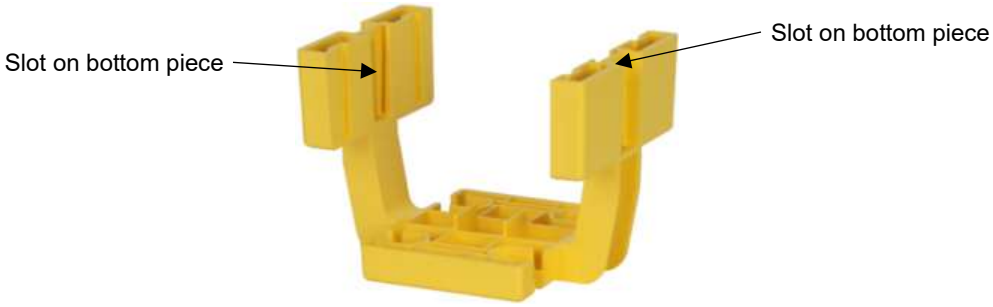

Fig. 3-6: Bottom piece with slots

2. Slide the top piece down into the slots as shown below.

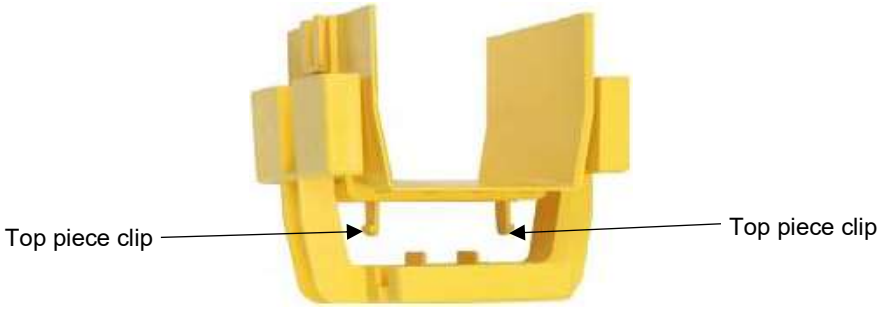

Fig. 3-7: Top and bottom pieces lined up

3. Press down until the clips snap into the square holes on the bottom piece.

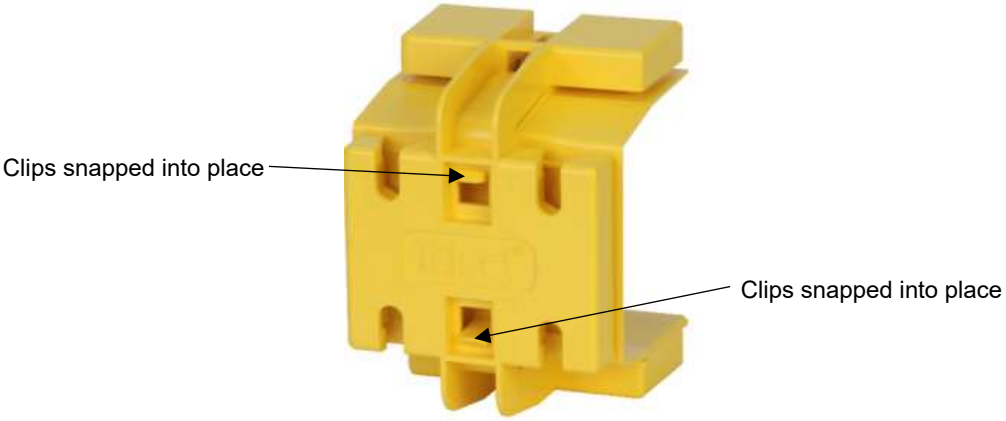

Fig. 3-8: Assembled coupler

Amphenol Network Solutions
All rights reserved. 150727 A4 06.11.2026
1.509.926.6000 — amphenol-ns.com

3.5.3 Installing a FastLock Coupler

Use a coupler to connect troughs to each other or another component such as an intersection or CableLinks adapter. While a coupler is comprised of two pieces that must be separated to add or remove components, installing a coupler to a notched trough or other component does not require any disassembly.

Before installing components to the FastLock Coupler, it is easier and faster to first mount the bottom piece of the coupler to the support brackets you have mounted onto the ladder rack or threaded rod.

To mount the FastLock Coupler to a support bracket, follow these steps:

1. Locate the support bracket on the ladder rack or threaded rod that will need the FastLock Coupler installed.

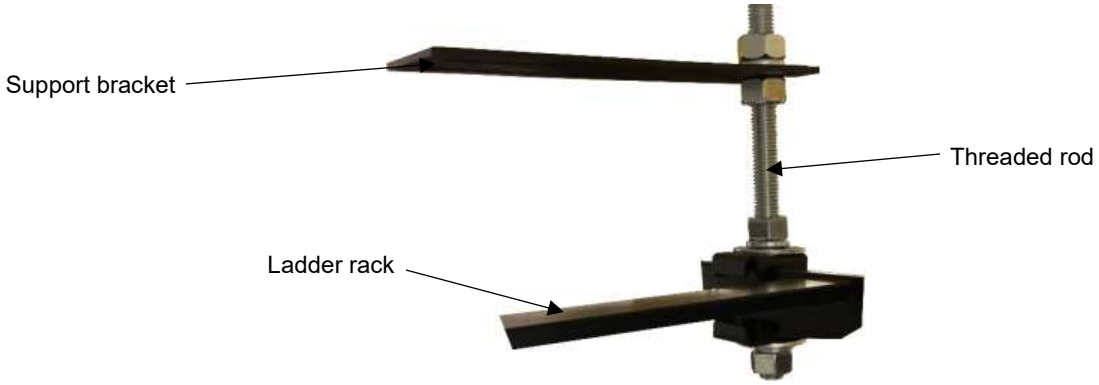

Fig. 3-9: Support bracket attached to ladder rack

2. Take the bottom piece of the coupler and two bolts provided in the support bracket kit.
3. Line up bottom piece of the coupler with the support bracket in the proper direction trough will run.
4. Insert two (2) $^{3}/_{8}$-16 hex bolts into the coupler and through the support bracket.

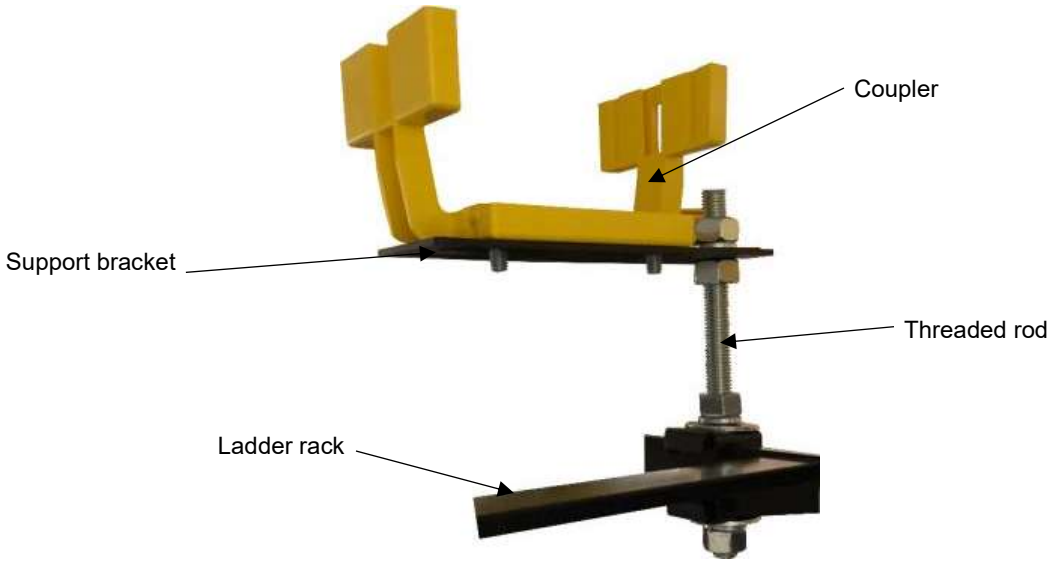

Fig. 3-10: Aligning the coupler

Amphenol Network Solutions
All rights reserved. 150727 A4 06.11.2026
1.509.926.6000 — amphenol-ns.com

5. Take two (2) $^{3}/_{8}$-16 hex nuts provided with the support bracket kit and tighten bolts to the bracket.

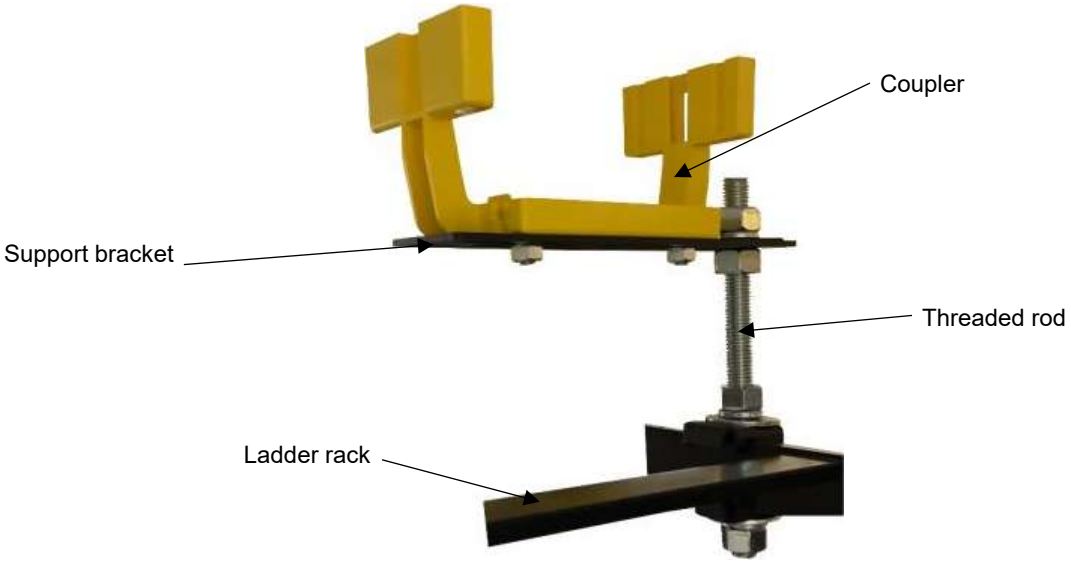

Fig. 3-11: Securing the coupler to the support bracket

Amphenol Network Solutions
All rights reserved. 150727 A4 06.11.2026
1.509.926.6000 — amphenol-ns.com

3.5.4 Removing FastLock Couplers

To remove the coupling kit, follow these steps:

1. Squeeze together the two clips on the bottom of the coupler.

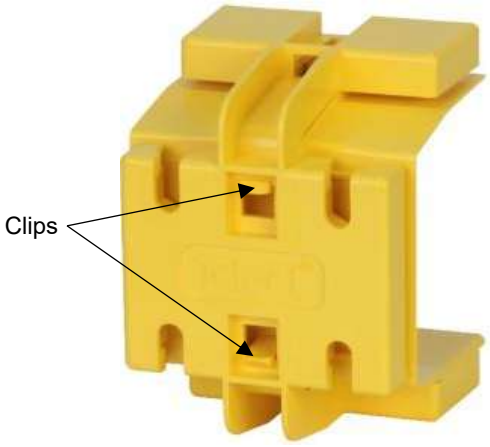

Fig. 3-12: Top piece clips

2. Pull up on the top piece of coupler until completely removed from the bottom piece.



Fig. 3-13: Removing the top piece

Amphenol Network Solutions
All rights reserved. 150727 A4 06.11.2026
1.509.926.6000 — amphenol-ns.com

3.6 Connecting Components with Locking Pins

Transition components such as an intersection, L-transition and reducers are pre-fitted with locking pins and teeth that allow other components such as trumpets, end caps, pin adapters and drop attachments to snap right on.

1. Make sure the pins on the transition are clear of any debris.

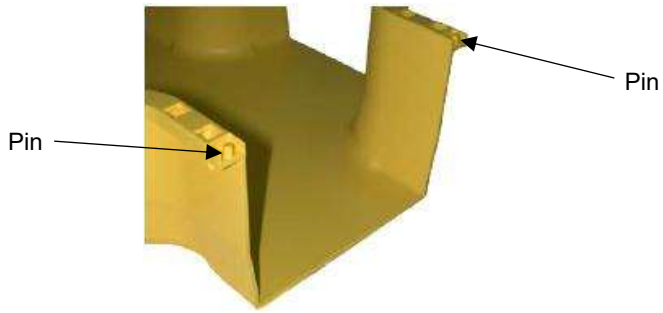

Fig. 3-15: Transition pins

2. Set the pin holes of the component being added over the pins of the transition.



Fig. 3-16: Setting the component

3. Rotate the new component down until the locking tab on the bottom snaps over the locking tooth located underneath the transition.



Fig. 3-17: Component locking tab

Amphenol Network Solutions
All rights reserved. 150727 A4 06.11.2026
1.509.926.6000 — amphenol-ns.com

3.7 Removing Components with Locking Pins

To remove a component with locking pins from a transition, follow these steps:

1. Bend the tab on the bottom of the locking component down until it clears the locking tooth.



Fig. 3-18: Locking tab

2. Rotate the component attached to the trough up.

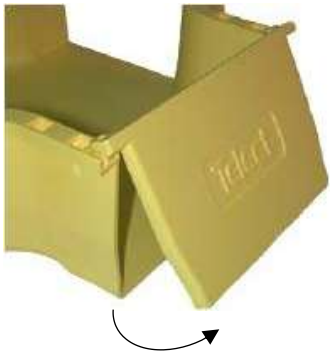

Fig. 3-19: Rotating component

3. Pull up on the component to remove from pin holes.

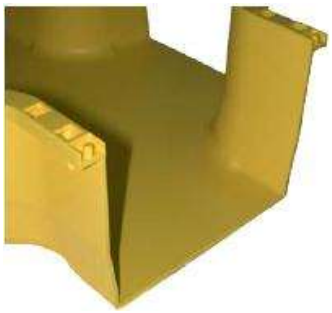

Fig. 3-20: Removing component

Amphenol Network Solutions
All rights reserved. 150727 A4 06.11.2026
1.509.926.6000 — amphenol-ns.com

3.8 Adapting WaveTrax Trough to CableLinks®

WaveTrax trough connects to CableLinks using one of four different adapters. The adapter required depends on the component you are connecting to and whether you want the cable path to continue horizontally or drop to vertical.

NOTE: CableLinks are available up to 6" width.

Table 2 – Adapting Trough to CableLinks

To transition a horizontal run of WaveTrax to CableLinks use the following adapters:

		
Fig. 3-21: Adapter, Transition to CableLinks	Fig. 3-22: Adapter, Transition to CableLinks, Reducing	Fig. 3-23: Trough Coupler to CableLinks, Adjustable
027-2000-4015 (4") 027-2000-6415 (6")	027-2000-4215 (4" to 2")	027-1000-4207 (2") 027-2000-4090 (4") 027-1000-6490 (6")
Attach the female pins of the vertical adapter to the male pins of the component.		Attach the end of the trough adapter with the tabs to the other end of the coupler.

To transition a horizontal run of WaveTrax to a vertical CableLinks drop:

	
Fig. 3-24: Drop Attachment	Fig. 3-25: Adapter, Transition to CableLinks, Reducing
027-2000-4277 (2") 027-2000-4077 (4") 027-2000-6477 (6") 027-2000-12477 (12" to 6")	027-2000-4262 (2” drop for 4" and 6" rough) 027-2000-4062 (4” drop for 4" and 6" trough) 027-2000-12262 (2” drop for 12" trough) 027-2000-12462 (4” drop for 12" trough) 027-2000-24062 (4” drop for 12” & 24” trough) 027-2000-24122 (12” drop for 12” & 24” trough)
Attach to any transition and add any of the transitions-to adapters from Fig. 3-20.	The 2" Express Off-Ramp shown includes a built-in drop to 2" CableLinks.

Amphenol Network Solutions
All rights reserved. 150727 A4 06.11.2026
1.509.926.6000 — amphenol-ns.com

3.9 Installing WaveTrax Trough or Slack Management Trough

1. Check to make sure all bottom pieces of the coupler have been mounted to the ladder rack or threaded rod.
2. Check that all troughs that require notching have been notched in the correct positions.
3. Line up the WaveTrax trough with the FastLock Coupler.
4. Press the vertical walls of the trough together so it slips onto the surface of the coupler.

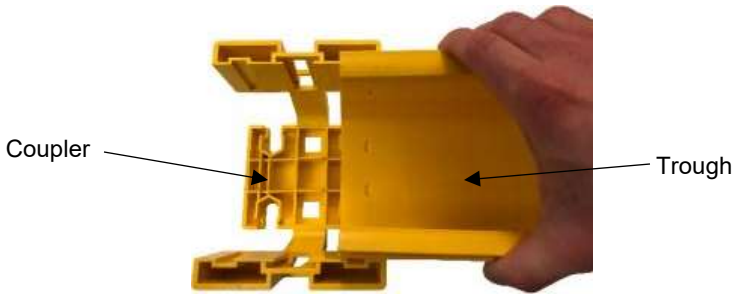

Fig. 3-26: Attaching trough to coupler

5. Slide the trough into the coupler until trough hits the top and bottom stops.

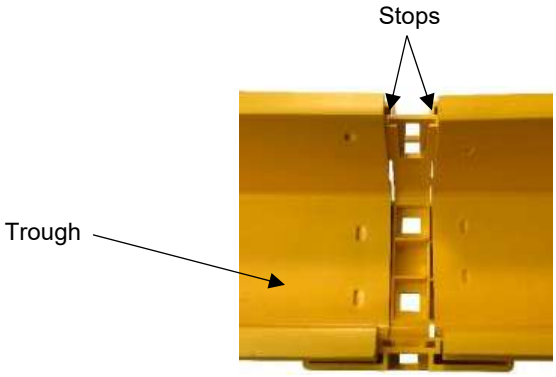

Fig. 3-27: Top stops

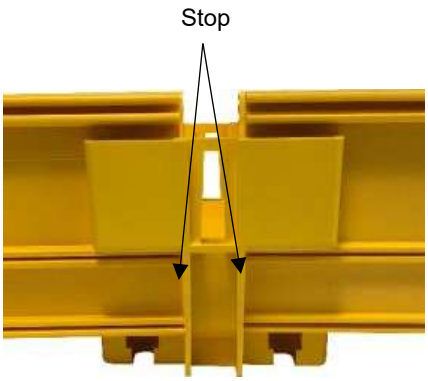

Fig. 3-28: Bottom stops

6. Install trough to other side of the coupler to continue a horizontal run by repeating Steps 1-6.



Fig. 3-29: Trough attached to both sides of coupler

Amphenol Network Solutions
All rights reserved. 150727 A4 06.11.2026
1.509.926.6000 — amphenol-ns.com

7. Take the top piece of the coupler and slide it down into the side slots of the bottom piece.

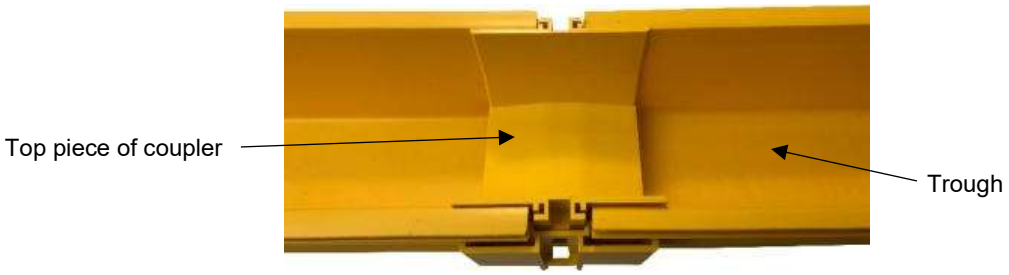

Fig. 3-30: Installing top piece of coupler

8. Press down on the top piece of coupler until it snaps into place.

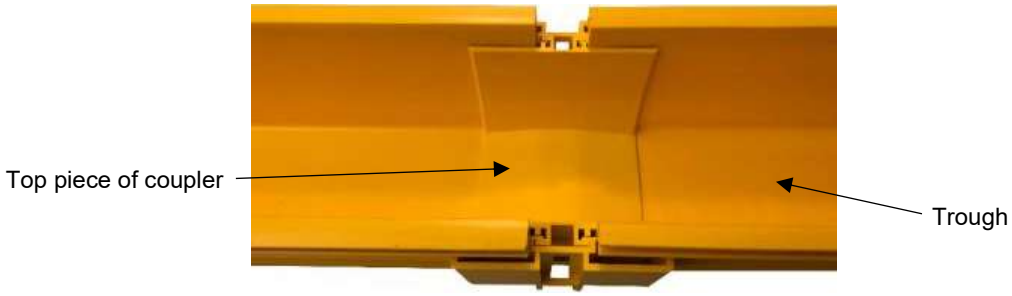

Fig. 3-31: Locking coupler

9. Repeat steps 1-8 when additional trough is being added.

Amphenol Network Solutions
All rights reserved. 150727 A4 06.11.2026
1.509.926.6000 — amphenol-ns.com

3.9.1 Installing Trough Covers

1. Snap one end of the trough cover onto the top of the vertical walls on the trough.

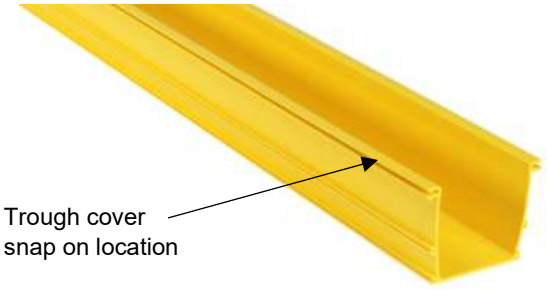

Fig. 3-32: Snap on location

2. Fold the other side of the cover down onto the top of the trough to cover the fiber.

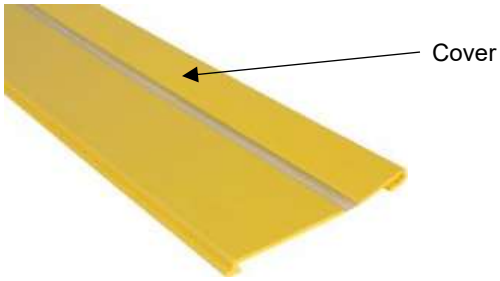

Fig. 3-33: Trough cover

Amphenol Network Solutions
All rights reserved. 150727 A4 06.11.2026
1.509.926.6000 — amphenol-ns.com

3.10 Installing a Horizontal Intersection or Slack Management Transition

Horizontal intersections create a four-way fiber intersection. This is the most versatile option and is best suited for new installations. If only one exit is required, install a horizontal T instead of a horizontal intersection.

1. Separate top piece and bottom piece of FastLock Coupler from each other.



Fig. 3-34: Top piece of coupler



Fig. 3-35: Bottom piece of coupler

2. Take bottom piece of FastLock Coupler and attach to the end of the trough.

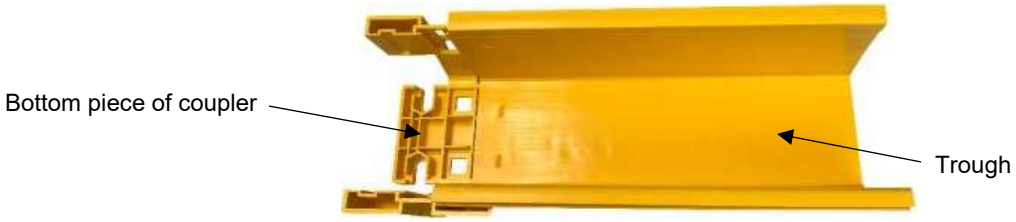

Fig. 3-36: Attaching trough to coupler

3. Take the horizontal intersection and connect to the other side of the coupler.

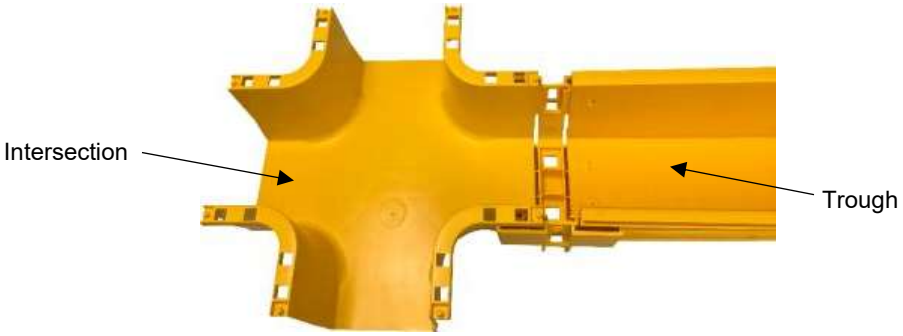

Fig. 3-37: Adding intersection to coupler

Amphenol Network Solutions
All rights reserved. 150727 A4 06.11.2026
1.509.926.6000 — amphenol-ns.com

4. Take the top piece of the coupler and slide it down into the side slots of the bottom piece.

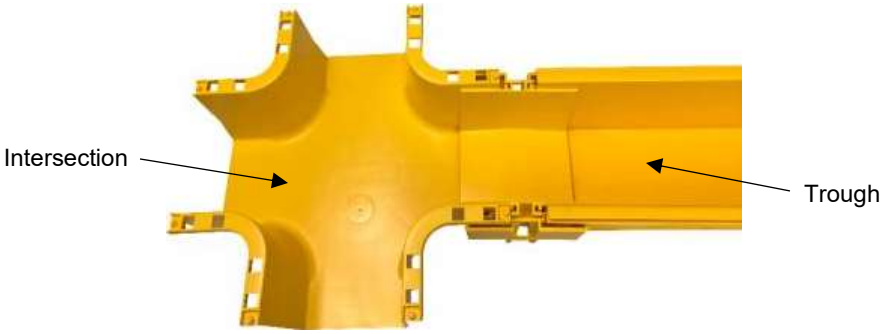

Fig. 3-38: Connecting intersection to trough with a coupler

5. Press down on the top piece of coupler until it snaps into place.



Fig. 3-39: Locking the intersection to the trough

6. Repeat steps 1-6 for installing other intersection exits.

Amphenol Network Solutions
All rights reserved. 150727 A4 06.11.2026
1.509.926.6000 — amphenol-ns.com

3.10.1 Installing a Horizontal Intersection Cover

1. Line up the intersection cover with the intersection.

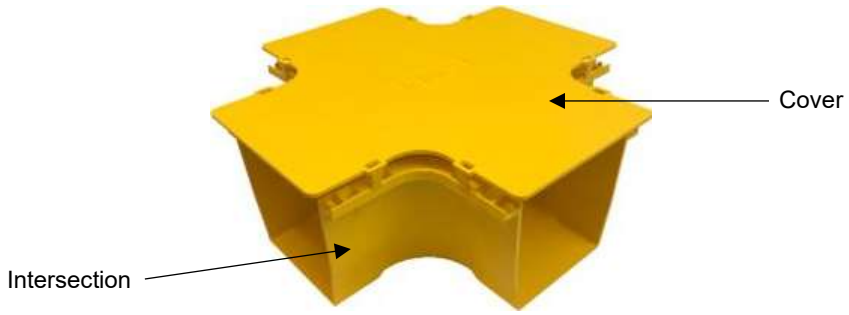

Fig. 3-40: Lining up the intersection cover

2. Press the cover down and snap the clips under the outside edges of the intersection.

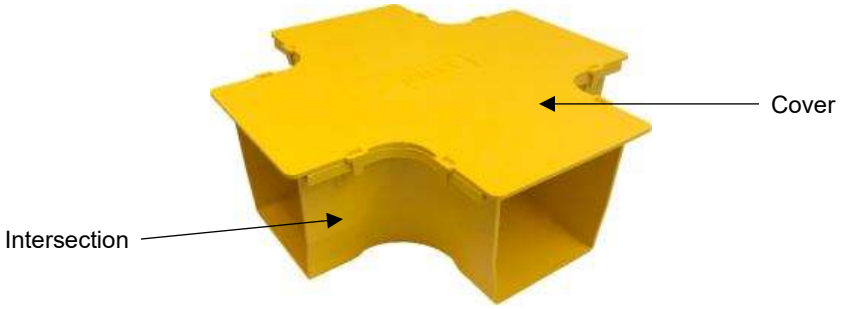

Fig. 3-41: Installing the intersection cover

Amphenol Network Solutions
All rights reserved. 150727 A4 06.11.2026
1.509.926.6000 — amphenol-ns.com

3.11 Installing a T-Transition

The T-transition creates a three-way, 90-degree split on the trough. If only one exit is required, install a T-transition instead of a horizontal intersection.

If using a FastLock Coupler to install a T-transition, follow these steps:

1. Separate top piece and bottom piece of FastLock Coupler from each other.



Fig. 3-42: Top piece of coupler



Fig. 3-43: Bottom piece of coupler

2. Take bottom piece and attach to the end of the trough.



Fig. 3-44: Attaching trough to coupler

3. Take the T-transition and connect to other side of the coupler.



Fig. 3-45: Adding T-transition to coupler

Amphenol Network Solutions
All rights reserved. 150727 A4 06.11.2026
1.509.926.6000 — amphenol-ns.com

4. Take the top piece of the coupler and slide it down into the side slots of the bottom piece.



Fig. 3-46: Connecting T-transition to trough with a coupler

5. Press down on the top piece of coupler until it snaps into place.



Fig. 3-47: Locking T-transition to the trough

6. Repeat steps 1-6 for installing other T-transition exits.

Amphenol Network Solutions
All rights reserved. 150727 A4 06.11.2026
1.509.926.6000 — amphenol-ns.com

3.11.1 Installing a T-Transition Cover

1. Snap the U-shaped clips on the T-transition cover onto the hinged clips on the back horizontal wall.

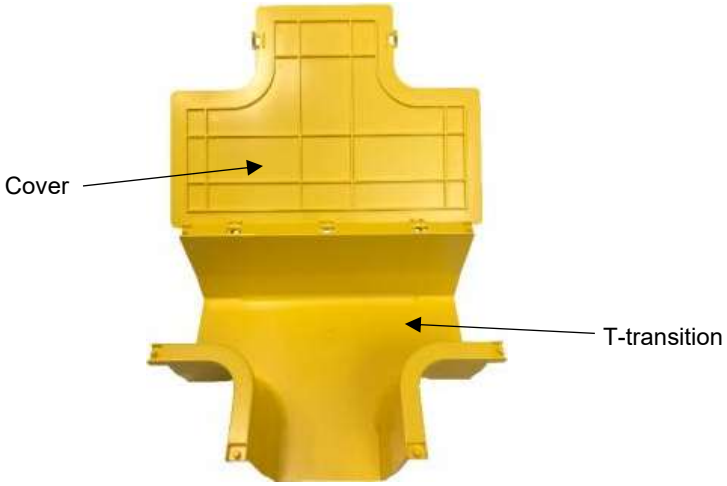

Fig. 3-48: T-transition hinged clips

2. Rotate the T-transition cover down onto the top of the T-transition vertical walls and snap the side clips under the outside edge of the T-transition.



Fig. 3-49: T-transition cover

Amphenol Network Solutions
All rights reserved. 150727 A4 06.11.2026
1.509.926.6000 — amphenol-ns.com

3.12 Installing a Reducer

Reducers provide a transition from larger to smaller trough sizes, while maintaining proper bend radius.

If using a FastLock coupler to install a reducer, follow these steps:

1. Separate top piece and bottom piece of FastLock Coupler from each other.



Fig. 3-50: Top piece of coupler



Fig. 3-51: Bottom piece of coupler

2. Take the bottom piece of the coupler and install on the end of the component.

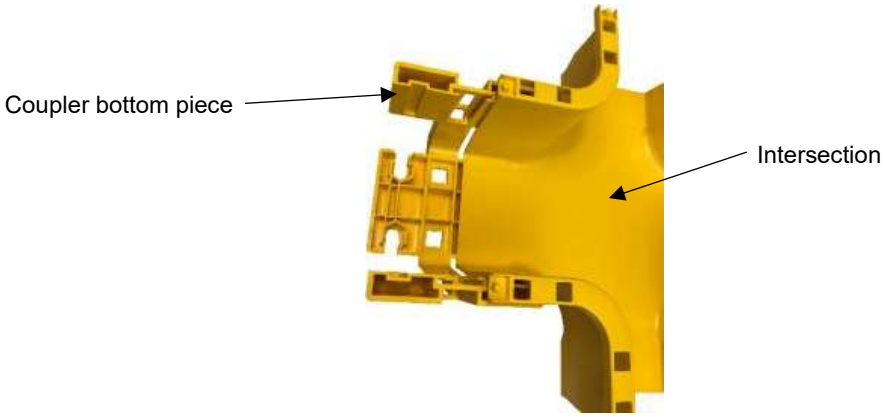

Fig. 3-52: Attaching coupler to component

3. Slide the reducer into the coupler until it hits the top and bottom stops of the coupler.

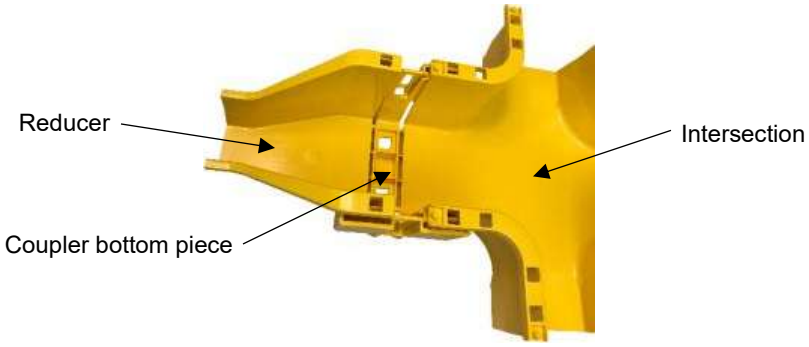

Fig. 3-53: Adding a reducer to the coupler

Amphenol Network Solutions
All rights reserved. 150727 A4 06.11.2026
1.509.926.6000 — amphenol-ns.com

4. Take the top piece of the coupler and slide it down into the side slots of the bottom piece.

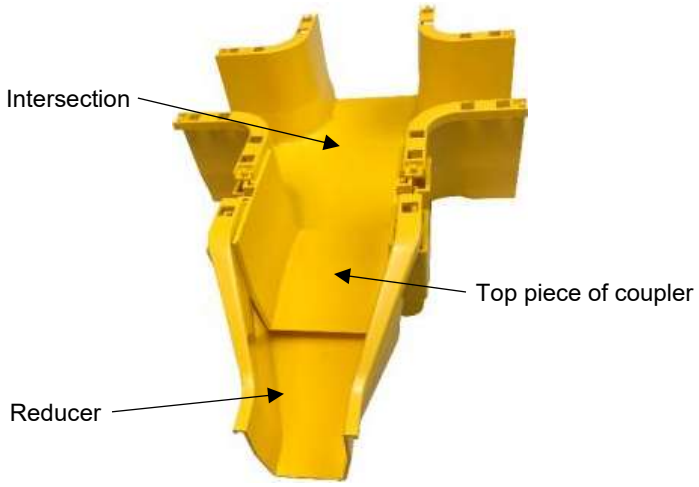

Fig. 3-54: Connecting components together with a coupler

5. Press down on the top piece of coupler until top piece of coupler snaps into place.

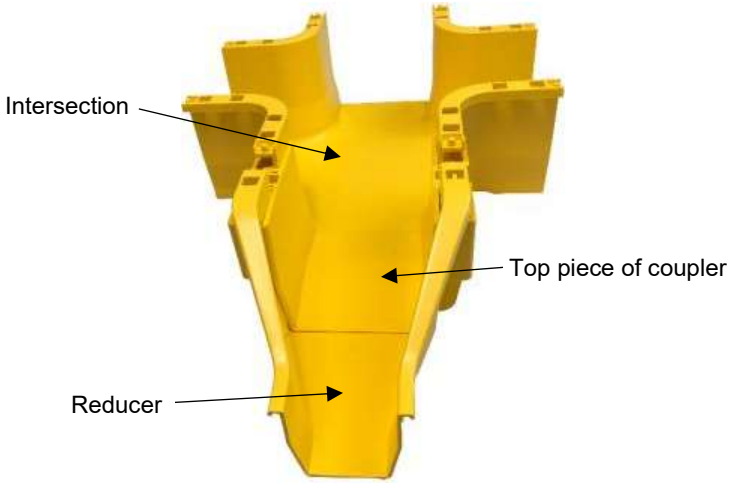

Fig. 3-55: Locking components together with a coupler

Amphenol Network Solutions
All rights reserved. 150727 A4 06.11.2026
1.509.926.6000 — amphenol-ns.com

3.12.1 Installing a Reducer Cover

If using a 4-inch to 2-inch reducer, follow these steps:

1. Locate the two locking tabs on the top of the reducer cover.

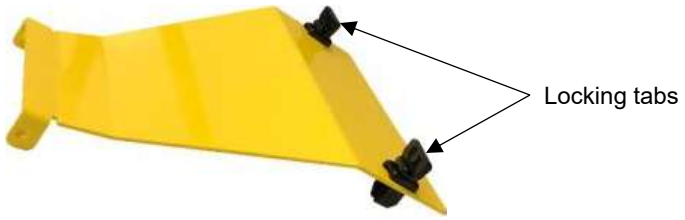

Fig. 3-56: Reducer cover locking tabs

2. Turn each locking tab 90 degrees to unlock the pins underneath the reducer cover.

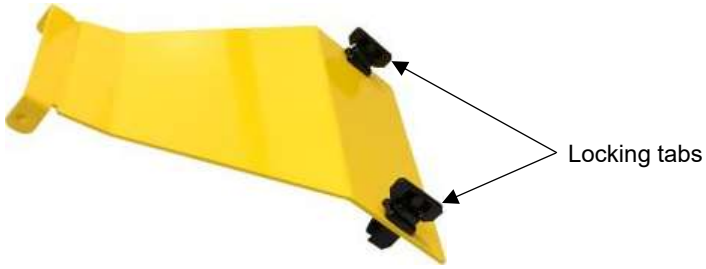

Fig. 3-57: Turning the locking tabs

3. Place locking tabs into the openings on the reducer and press down to cover the reducer.

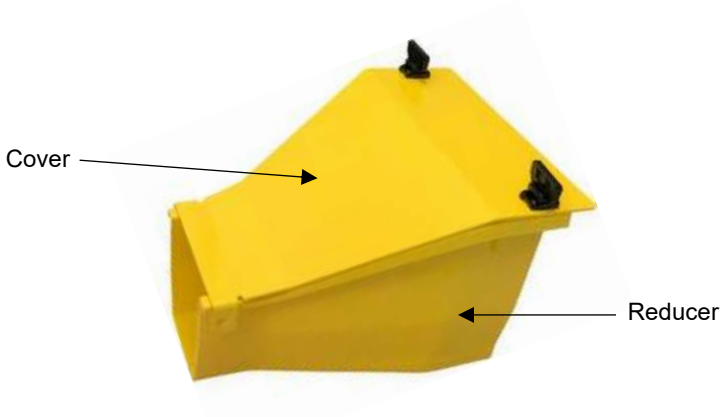

Fig. 3-58: Installing the reducer cover

Amphenol Network Solutions
All rights reserved. 150727 A4 06.11.2026
1.509.926.6000 — amphenol-ns.com

If using a 6-inch to 4-inch reducer or a 12-inch to 6-inch reducer, follow these steps:

1. Line up the reducer cover with the reducer.

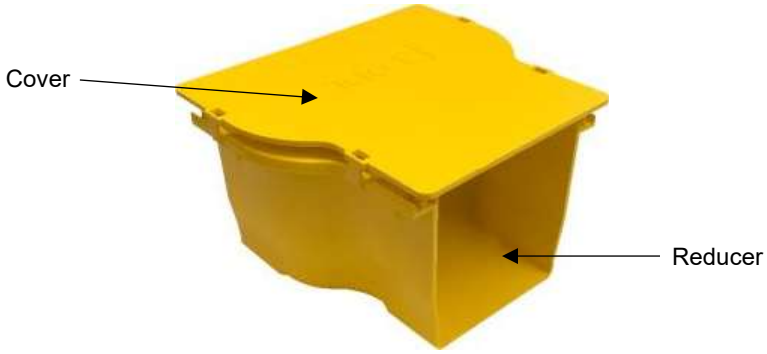

Fig. 3-59: Lining up the reducer cover

2. Press the cover down and snap the clips under the outside edges of the intersection.

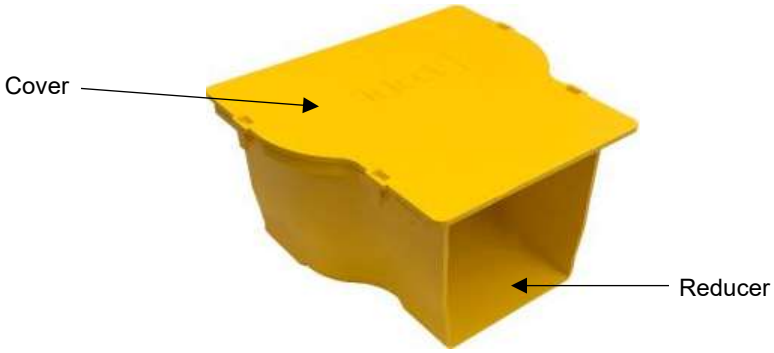

Fig. 3-60: Reducer cover and guide tabs

Amphenol Network Solutions
All rights reserved. 150727 A4 06.11.2026
1.509.926.6000 — amphenol-ns.com

3.13 Installing a Trumpet

Trumpets create a vertical exit for fiber to equipment below the trough. Trumpets have a curved surface to protect fiber cables from bend radius violations.

For 2-inch Trumpet only:

1. Separate top piece and bottom piece of FastLock Coupler from each other.



Fig. 3-61: Top piece of coupler



Fig. 3-62: Bottom piece of coupler

2. Take bottom piece of the coupler and attach it to the end of the component.



Fig. 3-63: Connecting trough to coupler

3. Install two-inch trumpet to the other side of the coupler by sliding the trumpet into the coupler until it hits the top and bottom stops.



Fig. 3-64: Connecting the trumpet to the coupler

Amphenol Network Solutions
All rights reserved. 150727 A4 06.11.2026
1.509.926.6000 — amphenol-ns.com

4. Take the top piece of the coupler and slide it down into the side slots of the bottom piece.

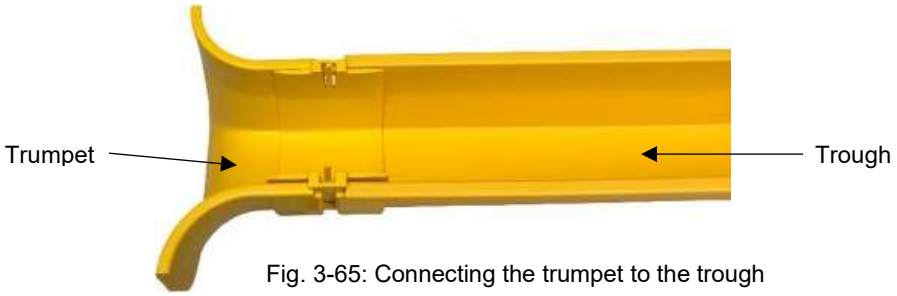

Fig. 3-65: Connecting the trumpet to the trough

5. Press down on the top piece of coupler until it snaps into place.



For 4-inch, 6-inch and 12-inch Trumpets:

1. Take the trumpet and attach the two female ends onto the two male pins at the end of the component.

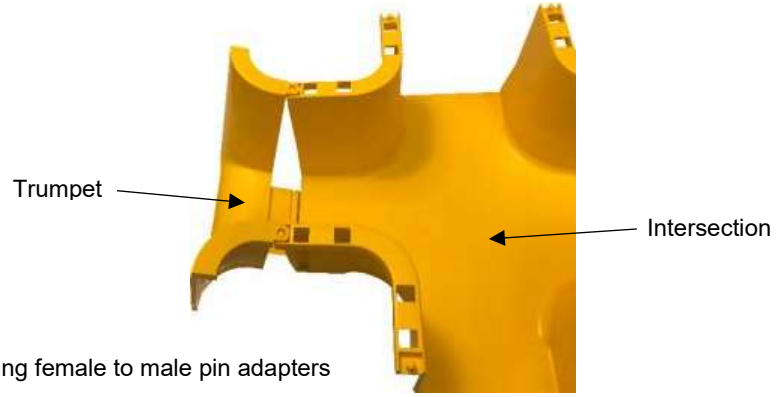

Fig. 3-67: Connecting female to male pin adapters

2. Rotate trumpet down until locking tab on the bottom snaps over the locking teeth located underneath the component.

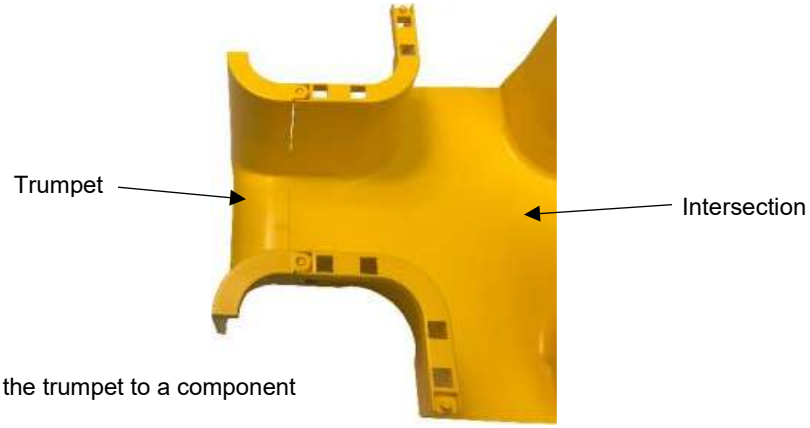

Fig. 3-68: Locking the trumpet to a component

Amphenol Network Solutions
All rights reserved. 150727 A4 06.11.2026
1.509.926.6000 — amphenol-ns.com

3.14 Installing a 45-Degree Elbow

The 45-degree elbow is used to take a slight turn in a horizontal run.

1. Separate top piece and bottom piece of FastLock Coupler from each other.



Fig. 3-69: Top piece of coupler



Fig. 3-70: Bottom piece of coupler

2. Take the bottom piece of the coupler and install it to one end of the 45-degree elbow.

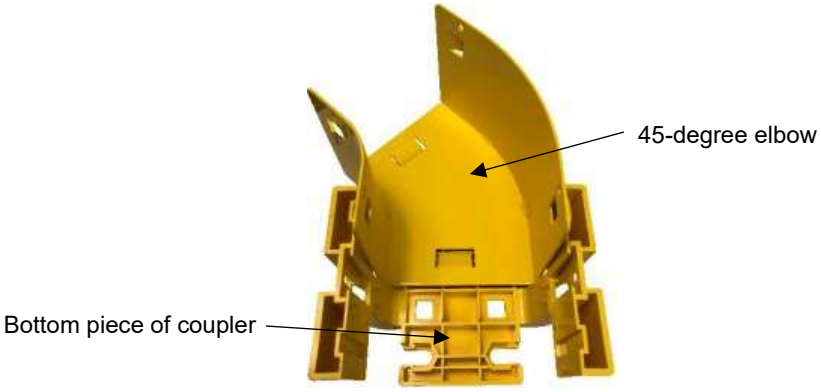

Fig. 3-71: Attaching the coupler to an elbow

3. Install trough or other component onto the other side of the coupler.

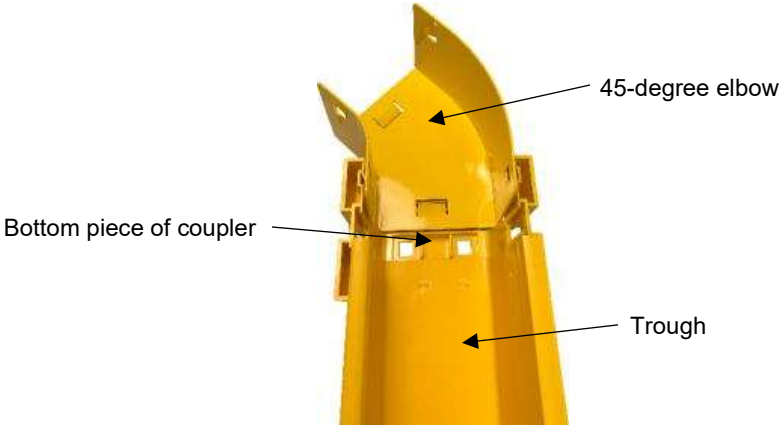

Fig. 3-72: Adding trough to the coupler

Amphenol Network Solutions
All rights reserved. 150727 A4 06.11.2026
1.509.926.6000 — amphenol-ns.com

4. Take the top piece of the coupler and slide it down into the side slots of the bottom piece.

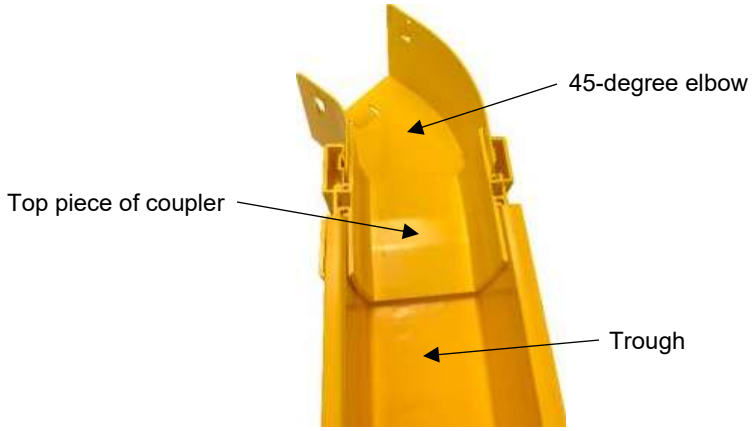

Fig. 3-73: Connecting the elbow and trough with a coupler

5. Press down on the top piece of coupler until it snaps into place.

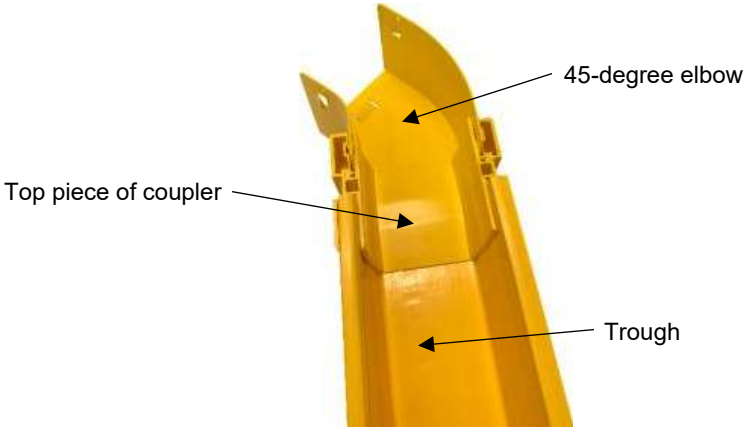

Fig. 3-74: Locking the elbow to the trough

6. Repeat steps 1-5 to install a coupler and component on the other side of the 45-degree elbow.

Amphenol Network Solutions
All rights reserved. 150727 A4 06.11.2026
1.509.926.6000 — amphenol-ns.com

3.15 Installing a L-Transition

An L-Transition or 90-degree elbow makes a left or right turn in the fiber raceway design.

1. Separate top piece and bottom piece of FastLock Coupler from each other.



Fig. 3-75: Top piece of coupler



Fig. 3-76: Bottom piece of coupler

2. Take the bottom piece of the coupler and install on the end of the trough.



Fig. 3-77: Attaching trough to the coupler

3. Take the L-transition and connect to the other side of the coupler.



Fig. 3-78: Adding the L-transition to the coupler

Amphenol Network Solutions
All rights reserved. 150727 A4 06.11.2026
1.509.926.6000 — amphenol-ns.com

4. Take the top piece of the coupler and slide it down into the side slots of the bottom piece.



Fig. 3-79: Connecting the L-transition to the trough with a coupler

5. Press down on the top piece of coupler until it snaps into place.



Fig. 3-80: Locking the L-transition to the trough

6. Repeat steps 1-5 to install a coupler and component on the other side of the L-transition.

Amphenol Network Solutions
All rights reserved. 150727 A4 06.11.2026
1.509.926.6000 — amphenol-ns.com

3.15.1 Installing a L-Transition Cover

1. Snap the U-shaped clips on the L-transition cover onto the hinged clips on the back horizontal wall.

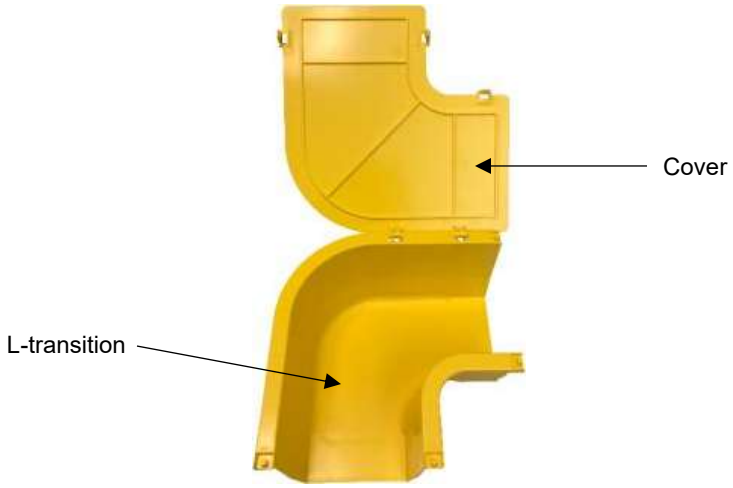

Fig. 3-81: L-transition hinged clips

2. Rotate the L-transition cover down onto the top of the L-transition vertical walls and snap the side clips under the outside edge of the L-transition.

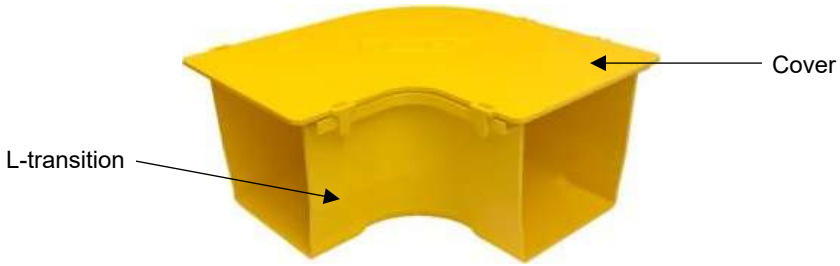

Fig. 3-82: L-transition cover

Amphenol Network Solutions
All rights reserved. 150727 A4 06.11.2026
1.509.926.6000 — amphenol-ns.com

3.16 Installing an Express T Interchange

The Express T Interchange is used to transition to a new horizontal run anywhere along an existing trough. It creates a new perpendicular run to an existing horizontal run at the same place.

1. Locate the Express ratcheting bracket assembly pieces.

    - Express L bracket
    - 4" & 6" ratcheting bracket – comes with a 4" or 6" Express L bracket order
    - 12" ratcheting bracket – comes with a 12" Express L bracket order
    - 24” ratcheting bracket – comes with a 24” Express L bracket order



Fig. 3-83: Express ratcheting bracket pieces

2. Insert the correct sized ratcheting bracket onto the Express L bracket by sliding the assembly together for a few clicks.

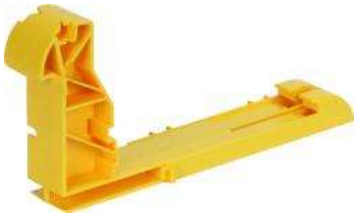

Fig. 3-84: Assembling the Express L bracket

3. Align the Express ratcheting bracket assembly to the WaveTrax trough section.



Fig. 3-85: Aligning the Express L bracket

Amphenol Network Solutions
All rights reserved. 150727 A4 06.11.2026
1.509.926.6000 — amphenol-ns.com

4. Lock assembly into place by sliding the Express ratcheting bracket assembly together until both pieces fit snuggly against the trough.

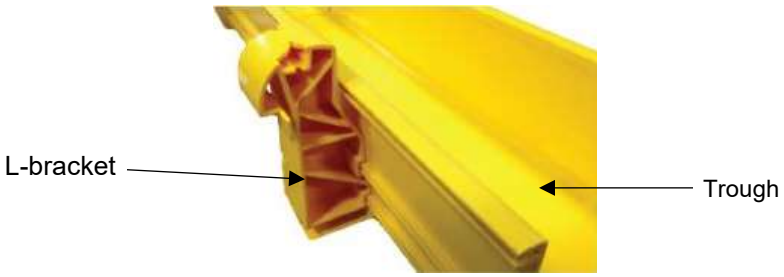

Fig. 3-86: Locking the bracket to the trough

5. Set the Express T interchange on the Express ratcheting bracket assembly by aligning the guide pins and pushing down on the interchange to snap into place.



Fig. 3-87: Connecting the T interchange to the ratcheting bracket

6. Install the two screws provided underneath the Express T interchange to secure the L bracket and the interchange together.



Amphenol Network Solutions
All rights reserved. 150727 A4 06.11.2026
1.509.926.6000 — amphenol-ns.com

3.16.1 Installing an Express T Interchange Cover

1. Install the cover by aligning the guide pins and snapping into place on the T interchange.

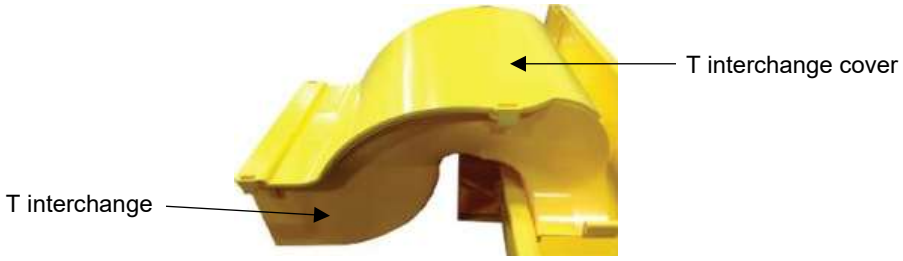

Fig. 3-88: Installing the Express T interchange cover

Amphenol Network Solutions
All rights reserved. 150727 A4 06.11.2026
1.509.926.6000 — amphenol-ns.com

3.17 Installing a 45-Degree Upsweep

The 45-degree upsweep is used to route fiber cables up to a higher elevation on your fiber raceway. The upsweep is often used to route around obstacles in a horizontal cable run.

1. Separate top piece and bottom piece of FastLock Coupler from each other.



Fig. 3-89: Top piece of coupler



Fig. 3-90: Bottom piece of coupler

2. Take the bottom piece of the coupler and install onto one end of the 45-degree upsweep.



Fig. 3-91: Attaching an upsweep to the coupler

3. Install trough or other component onto the other side of the coupler.



Fig. 3-92: Adding trough to the coupler

Amphenol Network Solutions
All rights reserved. 150727 A4 06.11.2026
1.509.926.6000 — amphenol-ns.com

4. Take the top piece of the coupler and slide it down into the side slots of the bottom piece.



Fig. 3-93: Connecting the upsweep to the trough with a coupler

5. Press down on the top piece of coupler until it snaps into place.



Fig. 3-94: Locking the upsweep to the trough with a coupler

6. Repeat steps 1-5 to install a coupler and component on the other side of the 45-degree upsweep.

Amphenol Network Solutions
All rights reserved. 150727 A4 06.11.2026
1.509.926.6000 — amphenol-ns.com

3.18 Installing a 45-Degree Down sweep

The 45-degree downsweep allows you to route fiber cables down to lower elevations on your fiber raceway. The downsweep is often used to route around obstacles in a horizontal cable run.

1. Separate top piece and bottom piece of FastLock Coupler from each other.



Fig. 3-95: Top piece of coupler



Fig. 3-96: Bottom piece of coupler

2. Take the bottom piece of the coupler and install onto one end of the 45-degree downsweep.

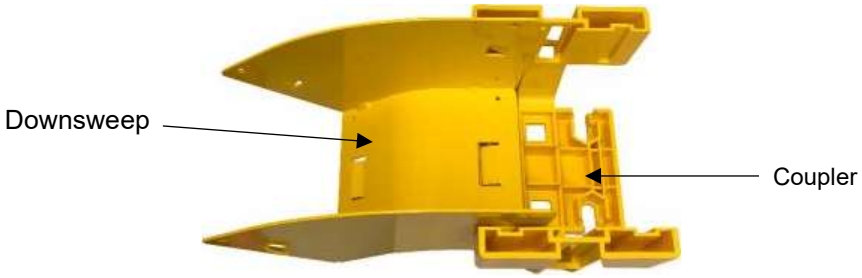

Fig. 3-97: Attaching a downsweep to the coupler

3. Install trough or other component onto the other side of the coupler.

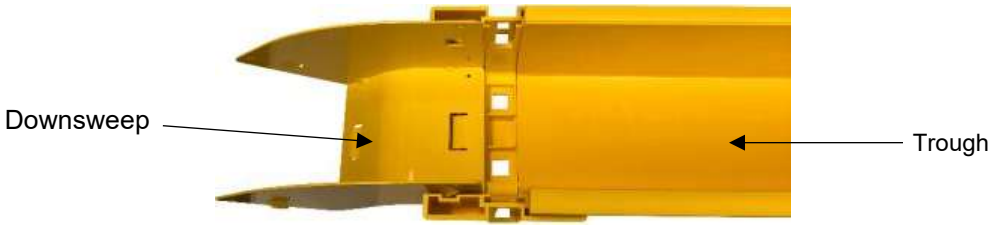

Fig. 3-98: Adding trough to the coupler

Amphenol Network Solutions
All rights reserved. 150727 A4 06.11.2026
1.509.926.6000 — amphenol-ns.com

4. Take the top piece of the coupler and slide it down into the side slots of the bottom piece.



Fig. 3-99: Connecting the downsweep to the trough with a coupler

5. Press down on the top piece of coupler until it snaps into place.



Fig. 3-100: Locking the downsweep to the trough with a coupler

6. Repeat steps 1-5 to install a coupler and component on the other side of the 45-degree downsweep.

Amphenol Network Solutions
All rights reserved. 150727 A4 06.11.2026
1.509.926.6000 — amphenol-ns.com

3.18.1 Installing a 45-Degree Down sweep Cover

Available for 6-inch downsweeps only.

1. Locate the female pin openings on the vertical walls of the 45-degree down sweep.

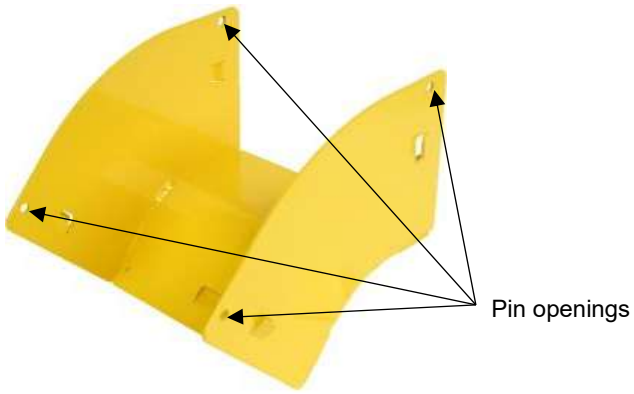

Fig. 3-101: Downsweep female pin openings

2. Insert the male pins of the cover into the female pin openings on the vertical walls of the down sweep. Insert the pins from the outside of the vertical walls.

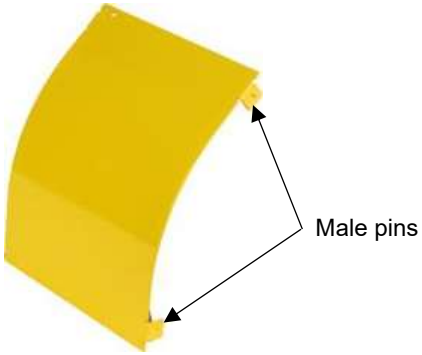

Fig. 3-102: Downsweep cover

Amphenol Network Solutions
All rights reserved. 150727 A4 06.11.2026
1.509.926.6000 — amphenol-ns.com

3.19 Installing a 90-Degree Upsweep

The 90-degree upsweep provides a transition from horizontal cable run to a vertical cable run. The 90-degree upsweeps are typically used for short distances (2-ft maximum) to avoid obstacles.

1. Separate the top piece and bottom piece of FastLock Coupler from each other.



Fig. 3-103: Top piece of coupler



Fig. 3-104: Bottom piece of coupler

2. Take the bottom piece of the coupler and install onto one end of the 90-degree upsweep.



Fig. 3-105: Attaching an upsweep to the coupler

3. Install trough or other component onto the other side of the coupler.

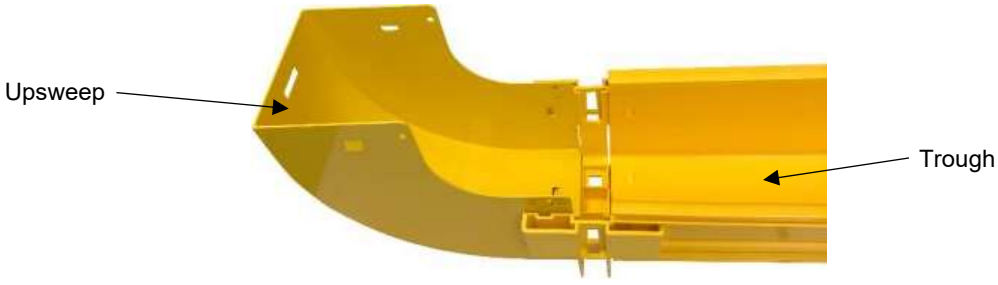

Fig. 3-106: Adding trough to the coupler

Amphenol Network Solutions
All rights reserved. 150727 A4 06.11.2026
1.509.926.6000 — amphenol-ns.com

4. Take the top piece of the coupler and slide it down into the side slots of the bottom piece.

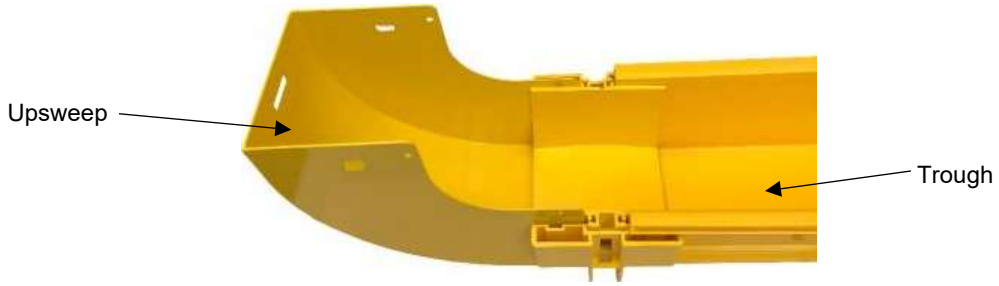

Fig. 3-107: Connecting the upsweep to the trough with a coupler

5. Press down on the top piece of coupler until it snaps into place.

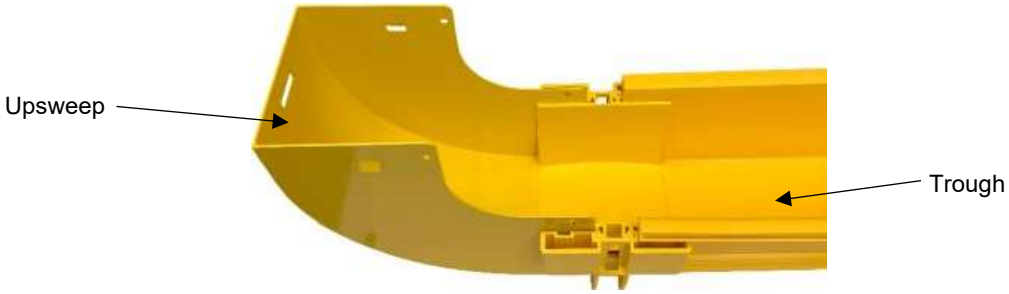

Fig. 3-108: Locking the upsweep to the trough with a coupler

6. Repeat steps 1-5 to install a coupler and component on the other side of the 90-degree upsweep.

Amphenol Network Solutions
All rights reserved. 150727 A4 06.11.2026
1.509.926.6000 — amphenol-ns.com

3.19.1 Installing a 90-Degree Upsweep Cover

1. Locate the female pin openings on the vertical walls of the 90-degree upsweep.

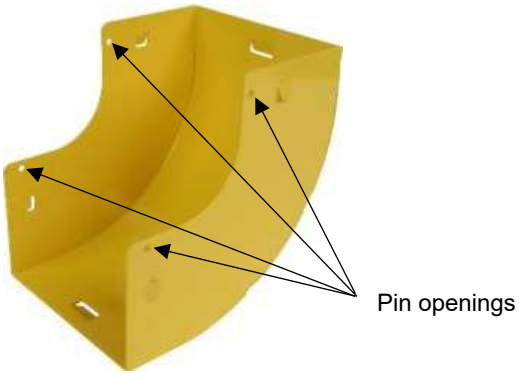

Fig. 3-109: 90-degree upsweep female pin openings

2. Insert the male pins of the cover into the female pin openings on the vertical walls of the upsweep. Insert the pins from the outside of the vertical walls.

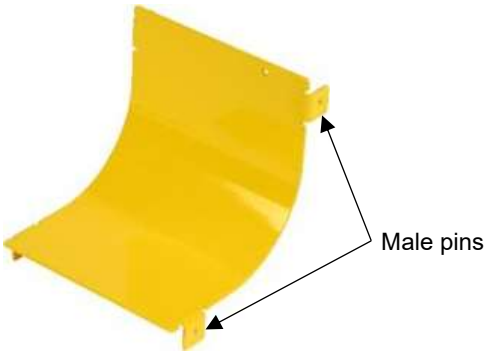

Fig. 3-110: Upsweep cover

Amphenol Network Solutions
All rights reserved. 150727 A4 06.11.2026
1.509.926.6000 — amphenol-ns.com

3.20 Installing a 90-Degree Drop Attachment

A drop attachment creates a vertical drop into equipment from the horizontal fiber trough.

If installing a 2-inch drop attachment, follow these steps:

1. Separate the top piece and bottom piece of the FastLock Coupler from each other.



Fig. 3-111: Top piece of coupler



Fig. 3-112: Bottom piece of coupler

2. Take the bottom piece of the coupler and install onto the component.

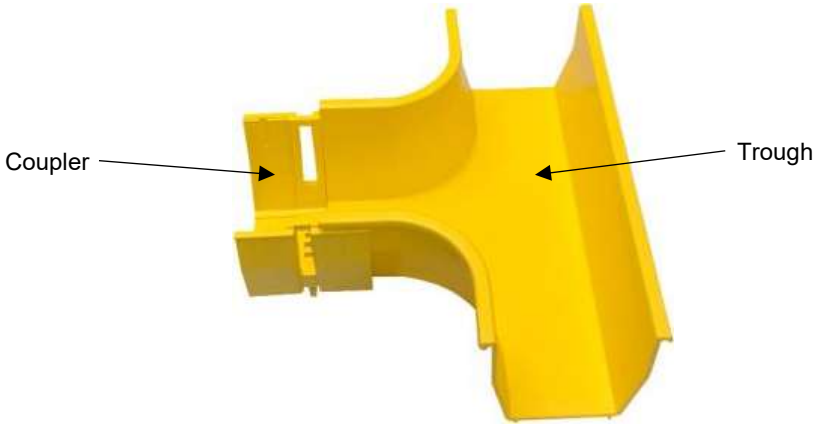

Fig. 3-113: Attaching a coupler to the component

3. Install the 90-degree drop attachment to the other side of the coupler.

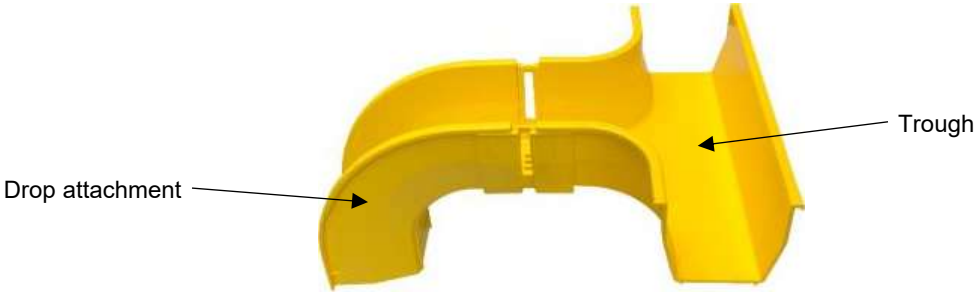

Fig. 3-114: Adding a drop attachment to the coupler

Amphenol Network Solutions
All rights reserved. 150727 A4 06.11.2026
1.509.926.6000 — amphenol-ns.com

4. Take the top piece of the coupler and slide it down into the side slots of the bottom piece.

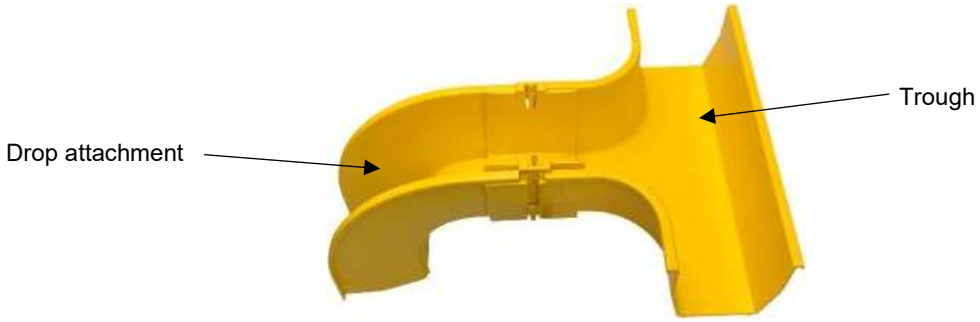

Fig. 3-115: Connecting a drop attachment to a component with a coupler

5. Press down on the top piece of coupler until it snaps into place.



Fig. 3-116: Locking a drop attachment to a component with a coupler

If installing a 4-inch, 6-inch or 12-inch drop attachment, follow these steps:

1. Take the drop attachment and connect the two female ends onto the two male pins on the end of the component.



Fig. 3-117: Attaching a drop attachment to a component

2. Rotate the drop attachment down until the locking tab on the bottom snaps over the locking teeth located under the component.



Fig. 3-118: Attaching a drop attachment to a component

Amphenol Network Solutions
All rights reserved. 150727 A4 06.11.2026
1.509.926.6000 — amphenol-ns.com

3.20.1 Installing a 90-Degree Drop Attachment Cover

1. Locate the two (2) tab openings on the drop attachment.

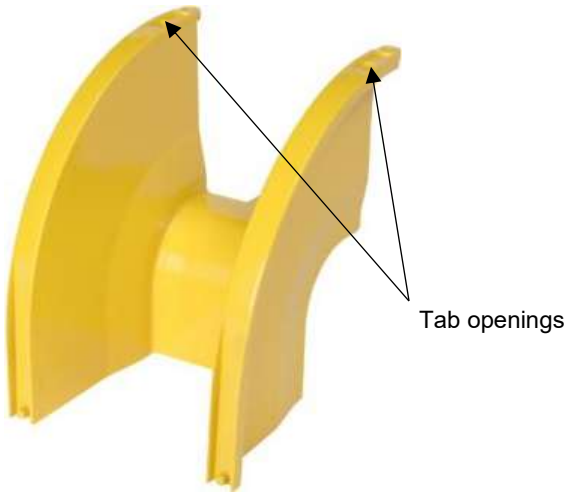

Fig. 3-119: Drop attachment tab openings

2. Insert the tabs into the tab openings and rotate the cover down to cover the drop attachment. Snap the side clips down on the top of the drop attachment cover walls.

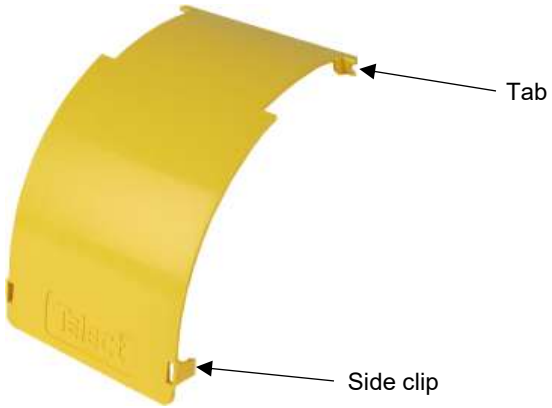

Fig. 3-120: Drop attachment cover

Amphenol Network Solutions
All rights reserved. 150727 A4 06.11.2026
1.509.926.6000 — amphenol-ns.com

3.21 Installing an Express Overpass

The WaveTrax Overpass forms an “H”, allowing you to transition between two parallel sections of trough at the same level on a fiber raceway. The Overpass requires no tools for installation.

- (2) Overpass end junctions
- (2) Overpass coupler
- Overpass extender



- Express L bracket
- 4" and 6" ratcheting bracket or
- 12" ratcheting bracket



1. Insert the correct sized ratcheting bracket onto the Express L bracket by sliding the assembly together or a few clicks.

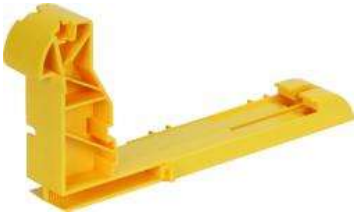

Fig. 3-121: Assembling the Express L bracket

2. Align the Express ratcheting bracket assembly to the WaveTrax trough section you want to add an Overpass.

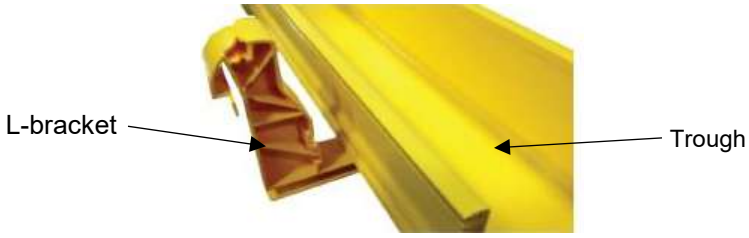

Fig. 3-122: Aligning the Express L bracket

Amphenol Network Solutions
All rights reserved. 150727 A4 06.11.2026
1.509.926.6000 — amphenol-ns.com

3. Lock the assembly into place by sliding the Express ratcheting bracket assembly together until both pieces fit snuggly against the trough.

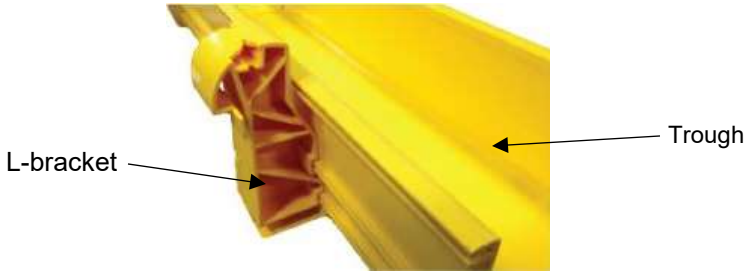

Fig. 3-123: Locking the Express L bracket to the trough

4. Repeat Steps 1-3 for the second Overpass ratcheting bracket making sure they are aligned on each trough.

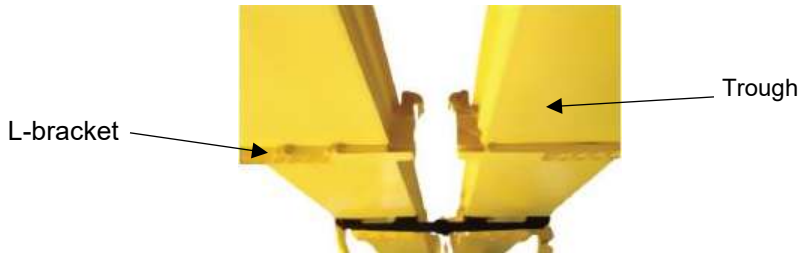

Fig. 3-124: Aligning both Express L brackets

5. Install one Overpass junction into an Overpass coupler as shown.



Fig. 3-125: Connecting the junction to the coupler

Amphenol Network Solutions
All rights reserved. 150727 A4 06.11.2026
1.509.926.6000 — amphenol-ns.com

6. Depending on the gap between the parallel runs, the Express Overpass is being installed on:

    a. Install the second Overpass junction to the Overpass coupler.

    b. Install the Overpass extender to the Overpass coupler, followed by the second Overpass coupler and second Overpass junction.



Fig. 3-126: Assembled overpass

7. Adjust the width of the Overpass to span the gap between the two troughs while allowing the Overpass junctions to snap onto the Express bracket assembly.
8. Set the Express Overpass on the Express ratcheting bracket assemblies by aligning the guide pins and pushing down on the Overpass.



Fig. 3-127: Securing the Express Overpass to the Express L bracket

9. Install the two screws into the locking thread holes underneath the Overpass.

Amphenol Network Solutions
All rights reserved. 150727 A4 06.11.2026
1.509.926.6000 — amphenol-ns.com

3.21.1 Installing an Express Overpass Cover

1. Install the cover by aligning the guide pins and snapping the cover into place on the Overpass.



Fig. 3-128: Overpass cover

Amphenol Network Solutions
All rights reserved. 150727 A4 06.11.2026
1.509.926.6000 — amphenol-ns.com

3.22 Adapting to a Competitive System

1. Locate the metal compatible top hat bracket and install on the CommScope/Panduit trough using the supplied hardware or equivalent in the desired location.



Fig. 3-129: Installing the top hat bracket

2. Insert the compatible Express L bracket into the top hat bracket. The top hat bracket will hold the Express L bracket in place.



Fig. 3-130: Mounting the Express L bracket

3. Set the Express T interchange on the compatible Express L bracket by aligning the guide pins and pushing down on the part to snap into place.



Fig. 3-131: Securing the Express T interchange to the Express L bracket

Amphenol Network Solutions
All rights reserved. 150727 A4 06.11.2026
1.509.926.6000 — amphenol-ns.com

Section Four: Installing Vertical Components

4.1 Installing a Center Drop

The center drop creates an in-line downspout in a cable run. The center drop provides direct access to the bay while minimizing the number of components required to transition from a horizontal run to a vertical drop.

These steps are best suited for new installations.

1. Separate top piece and bottom piece of FastLock Coupler from each other.



Fig. 4-1: Top piece of coupler



Fig. 4-2: Bottom piece of coupler

2. Take the bottom piece of the coupler and attach to one side of the center drop.



Fig. 4-3: Attaching center drop to coupler

3. Install trough or other component onto the other side of the coupler.



Fig. 4-4: Adding trough to the coupler

Amphenol Network Solutions
All rights reserved. 150727 A4 06.11.2026
1.509.926.6000 — amphenol-ns.com

4. Take the top piece of the coupler and slide it down into the side slots of the bottom piece.



Fig. 4-5: Connecting the center drop to the trough with a coupler

5. Press down on the top piece of coupler until it snaps into place.



Fig. 4-6: Locking the center drop to the trough

6. Repeat steps 1-5 to install coupler and component on the other end of the center drop.

Amphenol Network Solutions
All rights reserved. 150727 A4 06.11.2026
1.509.926.6000 — amphenol-ns.com

4.1.1 Installing a Center Drop Cover

1. Attach the front lid cover on to the center drop by connecting the female pins of the cover to the male pins of the center drop. Rotate cover down and snap the side clips onto the vertical walls of the center drop.



Fig. 4-7: Center drop front cover

2. Attach the top piece of the cover by inserting the U-shaped clips into the clip openings on the back of the center drop.

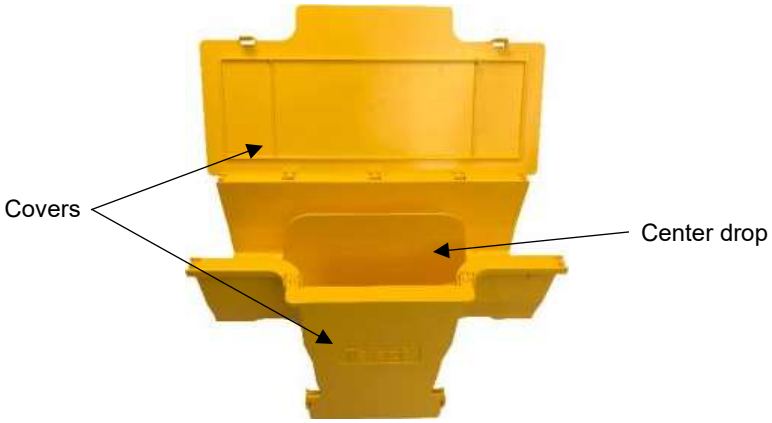

Fig. 4-8: Attaching center drop top cover

3. Rotate the top cover down until the sides snap down onto the top of the center drop.

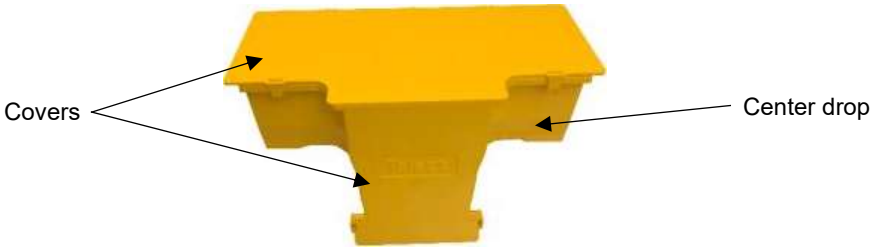

Fig. 4-9: Closing the center drop top cover

Amphenol Network Solutions
All rights reserved. 150727 A4 06.11.2026
1.509.926.6000 — amphenol-ns.com

4.2 Installing an Express Off-Ramp

The Express Off-Ramp provides a modular exit that snaps onto the side of an existing trough run. The off-ramp guides cable up and over the sidewall of a trough, then down into the desired bay.

1. Locate the express ratcheting bracket assembly pieces.
    - Express L bracket
    - 4" and 6" ratcheting bracket – comes with a 4" or 6" Express L bracket
    - 12" ratcheting bracket – comes with a 12" Express L bracket
    - 24” ratcheting bracket – comes with a 24” Express L bracket



Fig. 4-10: Express ratcheting bracket pieces

2. Insert the correct sized ratcheting bracket onto the express L bracket by sliding the assembly together for a few clicks.

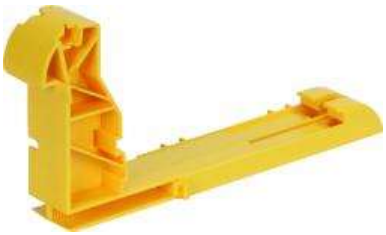

Fig. 4-11: Assembling the Express L bracket

3. Align the express ratcheting bracket assembly to the WaveTrax trough section.





Fig. 4-12: Aligning the Express L bracket

Amphenol Network Solutions
All rights reserved. 150727 A4 06.11.2026
1.509.926.6000 — amphenol-ns.com

4. Lock assembly into place by sliding the express ratcheting bracket assembly together until both pieces fit snuggly against the trough.

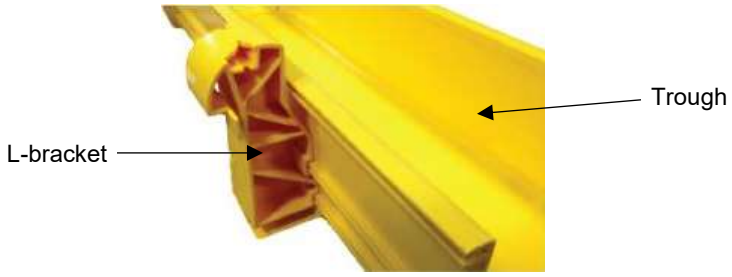

Fig. 4-13: Locking the Express L bracket

5. Set the Express Off-Ramp on the Express ratcheting bracket assembly by aligning the guide pins and pushing down on the off-ramp to snap into place.

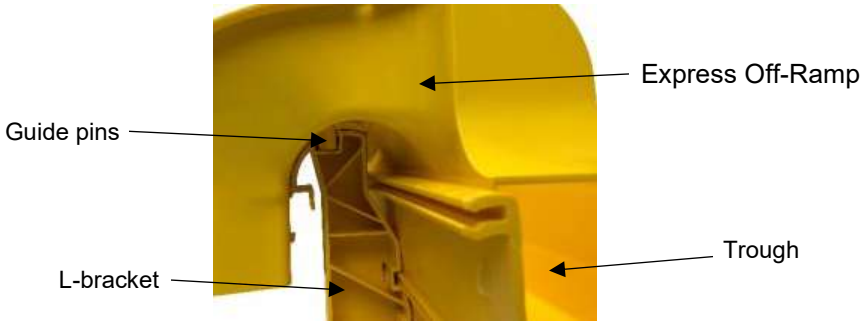

Fig. 4-14: Securing the Express Off-Ramp to the Express L bracket

6. Install the two screws provided underneath the Express Off-Ramp to secure the L bracket and the off-ramp together.

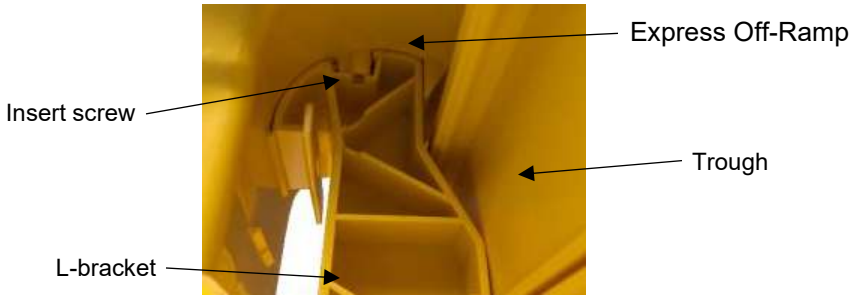

Fig. 4-15: Inserting screws into Express Off-Ramp

Amphenol Network Solutions
All rights reserved. 150727 A4 06.11.2026
1.509.926.6000 — amphenol-ns.com

4.2.1 Installing an Express Off-Ramp Cover

1. Install the Express Off-Ramp cover by aligning the guide tabs with the tab openings on the Express Off-Ramp

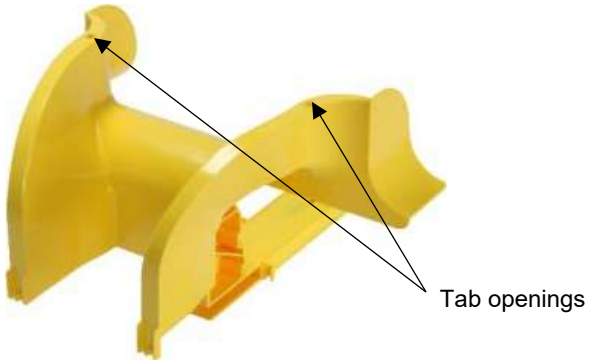

Fig. 4-16: Express Off-Ramp tab openings

2. Press the cover down until the guide tabs on the top snap into the Express Off-Ramp. Rotate the cover down and ensure the two side clips snap onto the sides of the Express Off-Ramp.

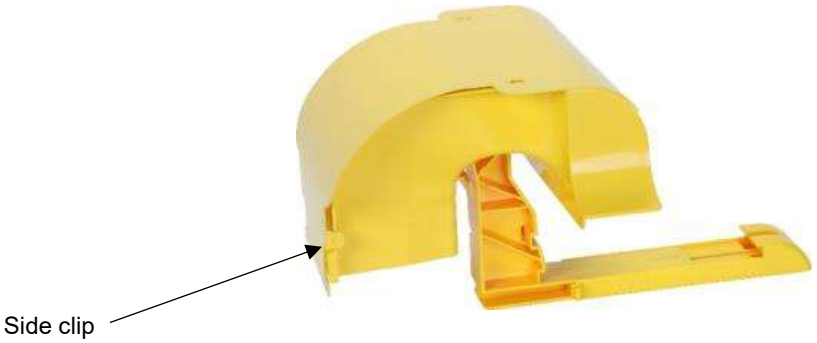

Fig. 4-17: Express Off-Ramp cover

4.3 Working with CableLinks

4.3.1 Overview

CableLinks can be adjusted 25° off center both horizontally and vertically to create a cable trough that can easily negotiate the most crowded work environments. Four links can make a 90° turn in any direction and then continue straight or undertake additional turns without the addition of any other components.

CableLinks ship with vertical joints connected as shown.



Fig. 4-18: CableLinks module

Amphenol Network Solutions
All rights reserved. 150727 A4 06.11.2026
1.509.926.6000 — amphenol-ns.com

4.3.2 Connecting Links

For 2-inch and 4-inch links

To connect links together:

1. Line up the female and male ends of two links with one another.

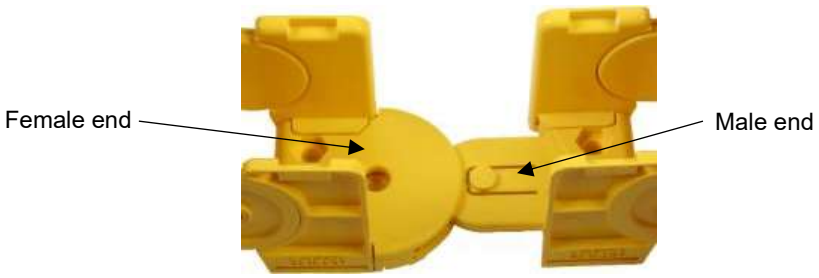

Fig. 4-19: Aligning opposite ends of links

2.

3. Slide female and male ends together until the center tab clicks into place.

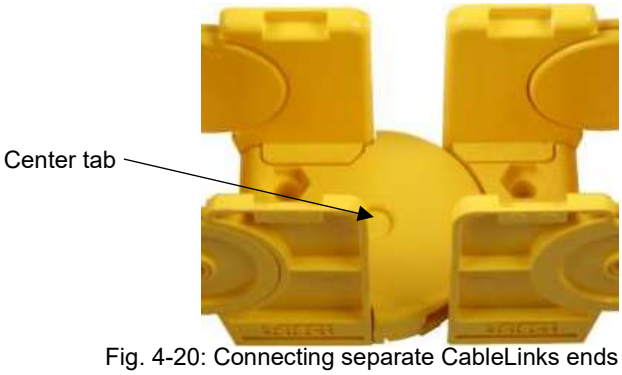

Fig. 4-20: Connecting separate CableLinks ends together

For 6-inch links

To connect links together:

1. Line up ends of two links with one another and slide links together till center holes align.

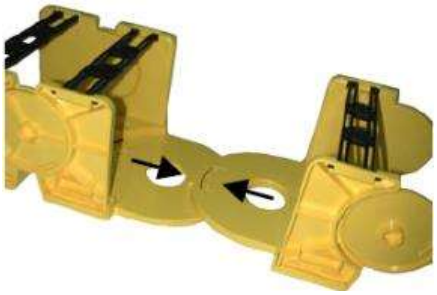

Fig. 4-21: Connecting separate 6-inch CableLinks ends together

Amphenol Network Solutions
All rights reserved. 150727 A4 06.11.2026
1.509.926.6000 — amphenol-ns.com

2. Press in the locking button in the center of the horizontal joint.

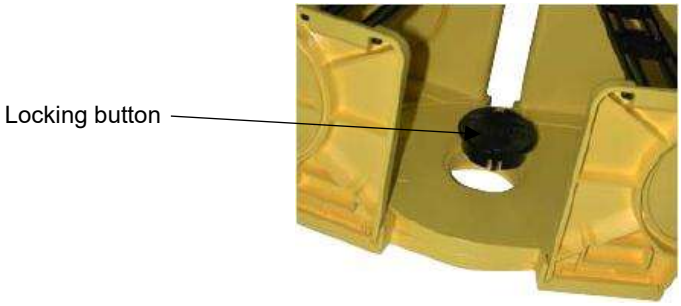

Fig. 4-22: Locking 6" CableLinks together

4.3.3 Connecting Links at the Vertical Joint

When needing to connect at the vertical joint of the link, follow these steps:

1. Remove one end of the H-shaped gates on top of the female end.

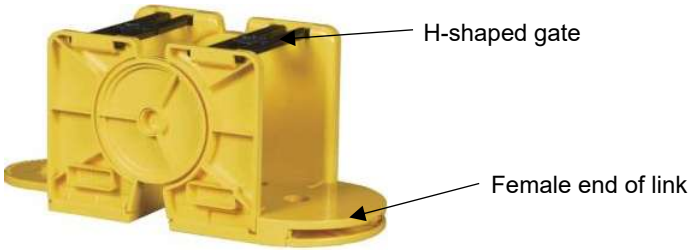

Fig. 4-23: CableLinks module

2. Squeeze the vertical walls of the female end together.

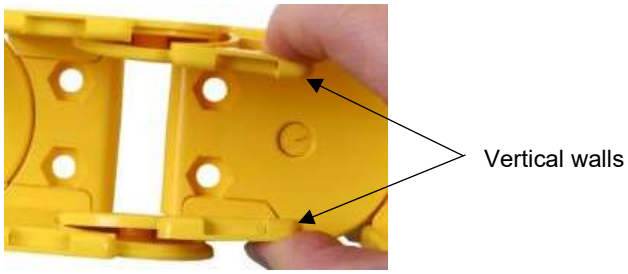

Fig. 4-24: Squeezing the vertical walls

Amphenol Network Solutions
All rights reserved. 150727 A4 06.11.2026
1.509.926.6000 — amphenol-ns.com

3. Slide female and male ends together until vertical joint clicks into center holes.



Fig. 4-25: Attaching CableLinks together

4. Attach H-shaped gate that were removed from the female end in Step 1.

4.3.4 Adjusting Links

When locked in properly, links can be rotated on the center horizontal joint 25° from center.

Horizontal and vertical joints will catch or lock, respectively, at about every eight degrees or travel.

To adjust CableLinks horizontally:

1. Flex links at the horizontal joint as needed.

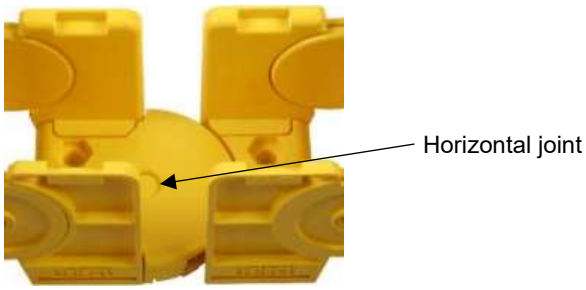

Fig. 4-26: CableLinks horizontal joint

To adjust CableLinks vertically:

1. Squeeze and remove one end of the H-shaped gates on top of the female end.



Fig. 4-27: CableLinks module

Amphenol Network Solutions
All rights reserved. 150727 A4 06.11.2026
1.509.926.6000 — amphenol-ns.com

2. Press in the vertical walls of the female end to disengage the locking teeth in the joint.



Fig. 4-28: CableLinks vertical walls

3. Flex links at the joint as needed.
4. Release vertical walls to engage the links in the locking teeth.
5. Attach H-shaped gates that were removed from the female end in Step 1.

4.4 Separating Links

For 2-inch and 4-inch links

To separate the links from one another at the horizontal joint:

1. Locate the two links you would like to separate from each other.
2. Depress the center locking tab at the horizontal joint. Use a screwdriver or similar tool to depress tab.



Fig. 4-29: Unlocking the horizontal joint

3. Pull links apart.

For 6-inch links

To separate the links from one another at the horizontal joint:

1. Locate the two links you would like to separate from each other.
2. Pop out the locking button from underneath the links.

Amphenol Network Solutions
All rights reserved. 150727 A4 06.11.2026
1.509.926.6000 — amphenol-ns.com

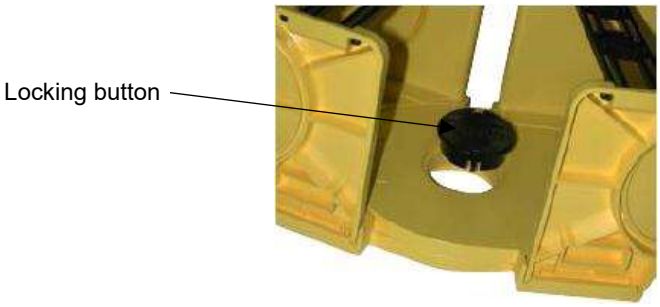

Fig. 4-30: Unlocking 6-inch CableLinks horizontal joint

3. Pull links apart.

To separate the links from one another at the vertical joint:

1. Locate the two links you would like to separate from each other.
2. Remove one end of the H-shaped gates on top of the female end.



Fig. 4-31: CableLinks module

3. Press in the vertical walls of the female end to disengage the locking teeth in the joint.



Fig. 4-32: CableLinks vertical walls

4. Pull links apart.

Amphenol Network Solutions
All rights reserved. 150727 A4 06.11.2026
1.509.926.6000 — amphenol-ns.com

4.5 WaveTrax Vertical Adapter to CableLinks

The vertical adapter to CableLinks provides a transition from overhead fiber trough to CableLinks components.

If dropping to dual 2-inch CableLinks, follow these steps:

1. Attach and secure the vertical component (center drop) to the horizontal component (trough).

   NOTE: See Section 4.1 “Installing a Center Drop” on page 83 for steps with installing a center drop.

2. Attach the female pins of the vertical adapter to the male pins of the component.

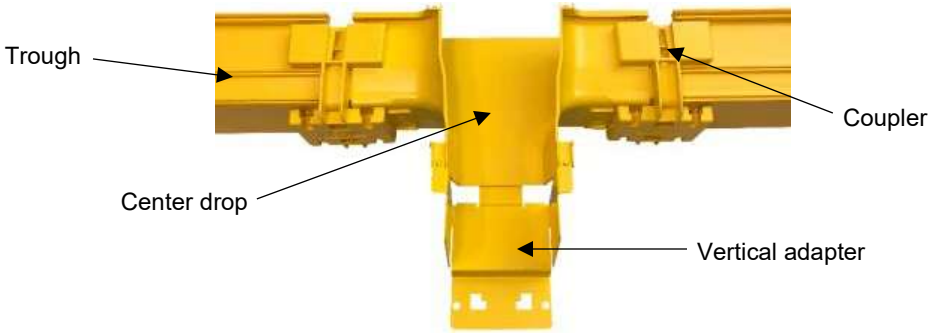

Fig. 4-33: Attaching vertical adapter to center drop

3. Rotate vertical adapter down until it snaps onto the locking tooth underneath the component.

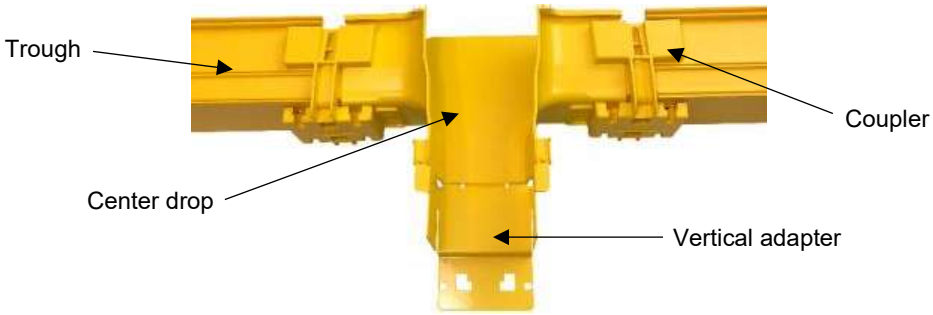

Fig. 4-34: Locking the vertical adapter to the center drop

Amphenol Network Solutions
All rights reserved. 150727 A4 06.11.2026
1.509.926.6000 — amphenol-ns.com

4. Slide the male or female end of a CableLinks module over the vertical adapter. Secure the CableLinks module to the vertical adapter using two (2) 1/4-20 hex bolts and two (2) 1/4-20 hex nuts.

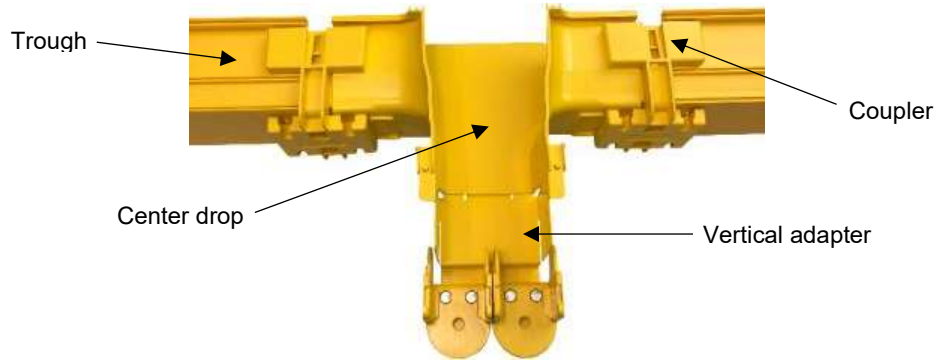

Fig. 4-35: Connecting CableLinks modules to the vertical adapter

5. Repeat step 4 to install second CableLinks module. (See photo above.)
6. Add additional CableLinks modules as needed. Install H-shaped gates to secure fiber as you add CableLinks modules.

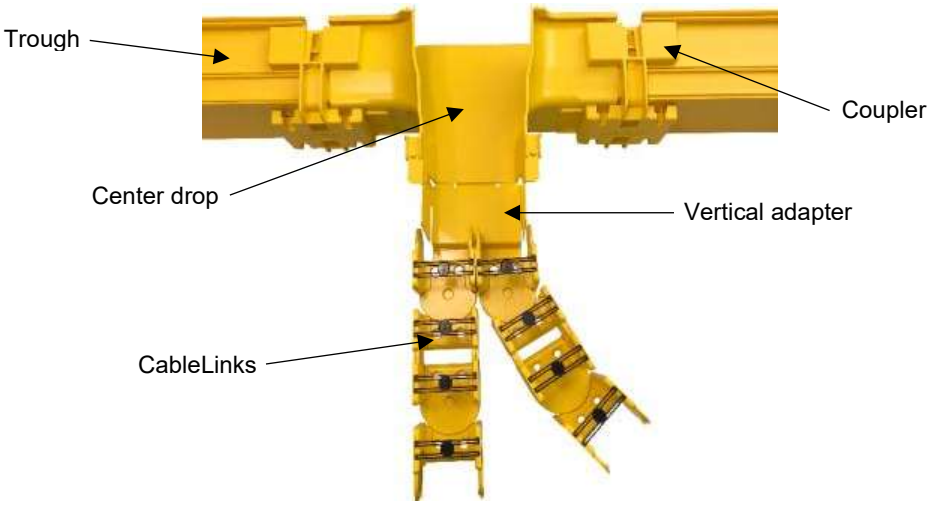

Fig. 4-36: Adding CableLinks modules

Amphenol Network Solutions
All rights reserved. 150727 A4 06.11.2026
1.509.926.6000 — amphenol-ns.com

If dropping to one 2-inch, 4-inch or 6-inch CableLinks, follow these steps:

1. Attach and secure the vertical component (center drop) to the horizontal component (trough).

   NOTE: See Section 4.1 “Installing a Center Drop” on page 83 for steps with installing a center drop.

2. Attach the female pins of the vertical adapter to the male pins of the component.

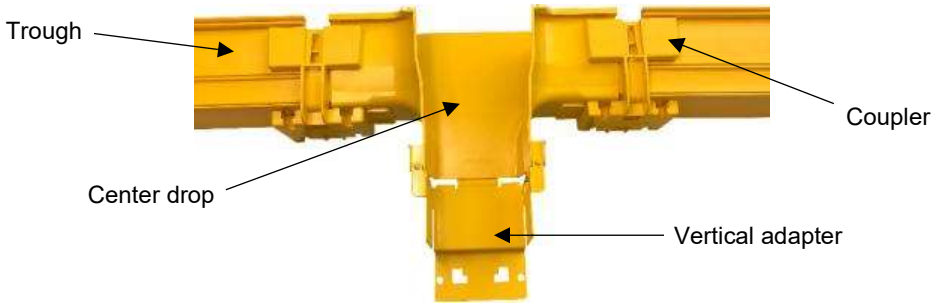

Fig. 4-37: Attaching vertical adapter to center drop

3. Rotate vertical adapter down until it snaps onto the locking tooth underneath the component.

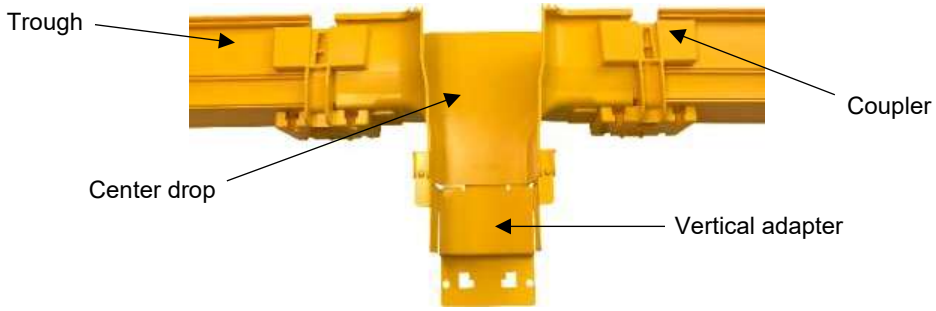

Fig. 4-38: Locking the vertical adapter to the center drop

4. Slide the male or female end of a CableLinks module over the vertical adapter. Secure the CableLinks module to the vertical adapter using two (2) 1/4-20 hex bolts and two (2) 1/4-20 hex nuts.

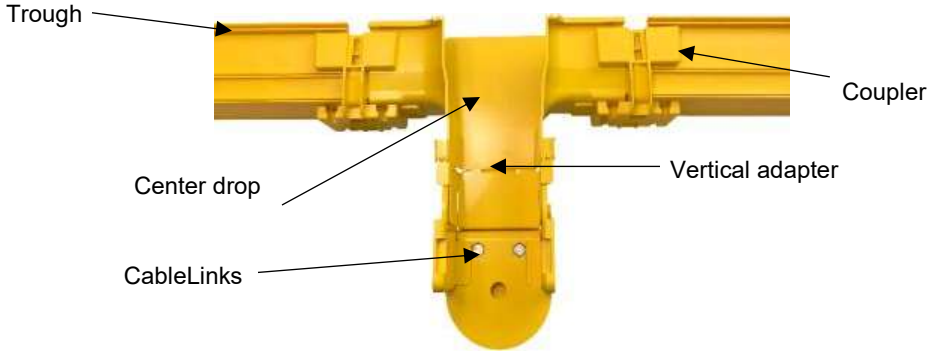

Fig. 4-39: Connecting CableLinks module to the vertical adapter

Amphenol Network Solutions
All rights reserved. 150727 A4 06.11.2026
1.509.926.6000 — amphenol-ns.com

5. Add additional CableLinks modules as needed. Install H-shaped gates to secure fiber as you add CableLinks modules.

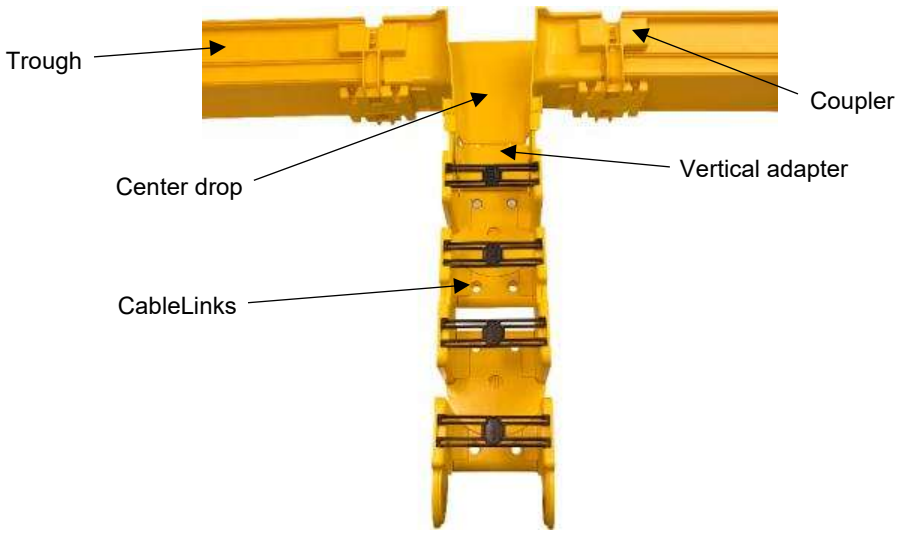

Fig. 4-40: Adding CableLinks modules

4.6 CableLinks to Trough Adapter

The CableLinks to trough adapter allows you to connect CableLinks to trough.

1. Separate top piece and bottom piece of FastLock Coupler from each other.



Fig. 4-41: Top piece of coupler



Fig. 4-42: Bottom piece of coupler

2. Separate male and female ends of the CableLinks module.
3. Take bottom piece of the coupler and attach to trough until both pieces are secured together.

Amphenol Network Solutions
All rights reserved. 150727 A4 06.11.2026
1.509.926.6000 — amphenol-ns.com



Fig. 4-43: Attaching trough to a coupler

4. Attach the end of the trough adapter with the tabs to the other end of the coupler.



Fig. 4-44: Adding the trough adapter to the coupler

5. Take the top piece of the coupler and slide it down into the side slots of the bottom piece.



Fig. 4-45: Connecting the trough adapter to the trough with a coupler

6. Press down on the top piece of coupler until it snaps into place.



Fig. 4-46: Locking the trough adapter to the trough

7. Take the male or female end of a CableLinks and slide over the trough adapter.

   NOTE: Attaching male or female end of CableLinks to trough adapter depends on how you plan to exit trough into CableLinks.

Amphenol Network Solutions
All rights reserved. 150727 A4 06.11.2026
1.509.926.6000 — amphenol-ns.com



Fig. 4-47: Lining up the CableLinks module with the trough adapter

8. Insert the two (2) $^{3}/_{8}$-16 bolts and feed bolts through CableLinks and adapter openings. Use the two (2) $^{3}/_{8}$-16 hex nuts to secure bolts.

   NOTE: Do not fully tighten to allow for adjusting CableLinks with trough adapter to desired length.



Fig. 4-48: Securing the CableLinks module to the trough adapter

9. Take opposite end of CableLinks module and connect ends together. Push together until module snaps together.

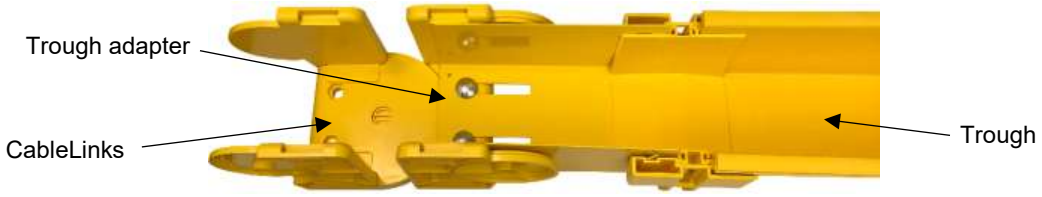

Fig. 4-49: Connecting male and female ends of the CableLinks module

10. Adjust to the desired length and tighten down with two (2) $^{3}/_{8}$-16 hex nuts.

Amphenol Network Solutions
All rights reserved. 150727 A4 06.11.2026
1.509.926.6000 — amphenol-ns.com

11. Install H-shaped gates to the top of the CableLinks module.



Fig. 4-50: H-shaped gates on the CableLinks module

Amphenol Network Solutions
All rights reserved. 150727 A4 06.11.2026
1.509.926.6000 — amphenol-ns.com

4.7 Installing Slotted Duct

Slotted duct provides a vertical cable management solution in and out of the trough.

1. Attach and secure the vertical component (Express Off-Ramp) to the horizontal component (Trough).

NOTE: Line up vertical component in most suitable position to drop vertically to slotted duct on the rack.

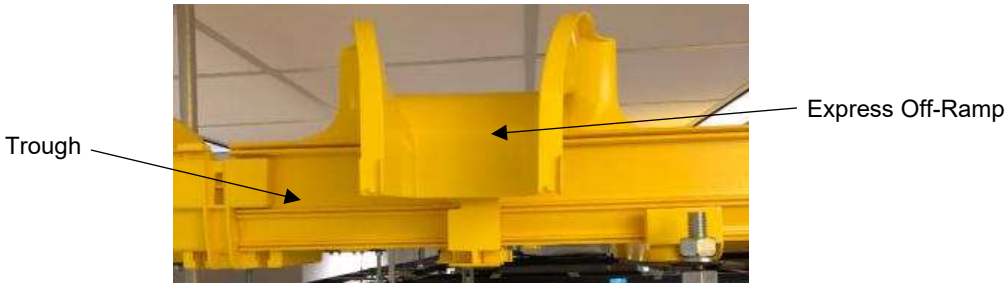

Fig. 4-51: Setting the vertical component on the trough

2. Attach vertical adapter to CableLinks to the vertical component. Rotate adapter down until it snaps onto the locking tab on the vertical component.

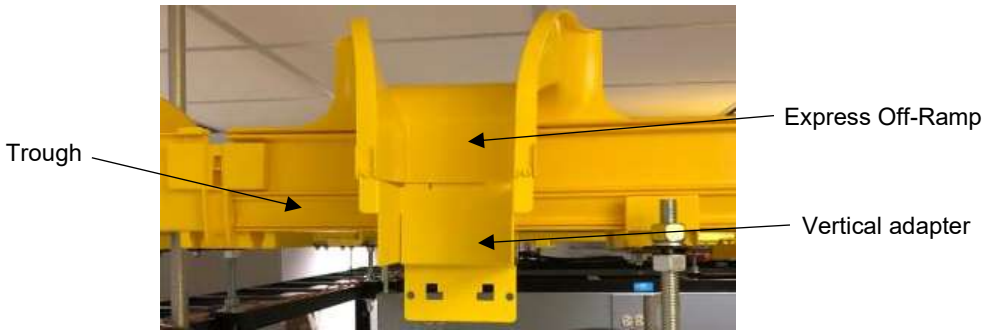

Fig. 4-52: Attaching vertical adapter to the vertical component

3. Separate top piece and bottom piece of FastLock Coupler from each other.



Fig. 4-53: Top piece of coupler



Fig. 4-54: Bottom piece of coupler

Amphenol Network Solutions
All rights reserved. 150727 A4 06.11.2026
1.509.926.6000 — amphenol-ns.com

4. Assemble the rack bracket by inserting the two clips into the two sliding spaces located on the smaller piece of the bracket.



Fig. 4-55: Aligning the rack bracket

5. Using a 1/4" flat washer and 1/4-20 hex bolt, connect both pieces of the bracket.

   NOTE: Do not fully tighten until rack bracket is in the correct position.



Fig. 4-56: Securing rack bracket together

6. Attach the rack bracket to the desired position on the rack using two (2) 12-24 screws.
7. Using two (2) 3/8-16 hex bolts, insert the bolts into the bottom piece of the coupler and insert the bolt through the bracket openings. Tighten down with two (2) 3/8-16 hex nuts.



Fig. 4-57: Securing rack bracket and coupler to the rack

8. Repeat steps 3-7 to install the second bracket and coupler to the rack.
9. Place the slotted duct into the two couplers located on the rack.
10. Take the top piece of the coupler and slide it down into the side slots of the bottom piece.

Amphenol Network Solutions
All rights reserved. 150727 A4 06.11.2026
1.509.926.6000 — amphenol-ns.com

11. Press down on the top piece of the coupler until it snaps into place.

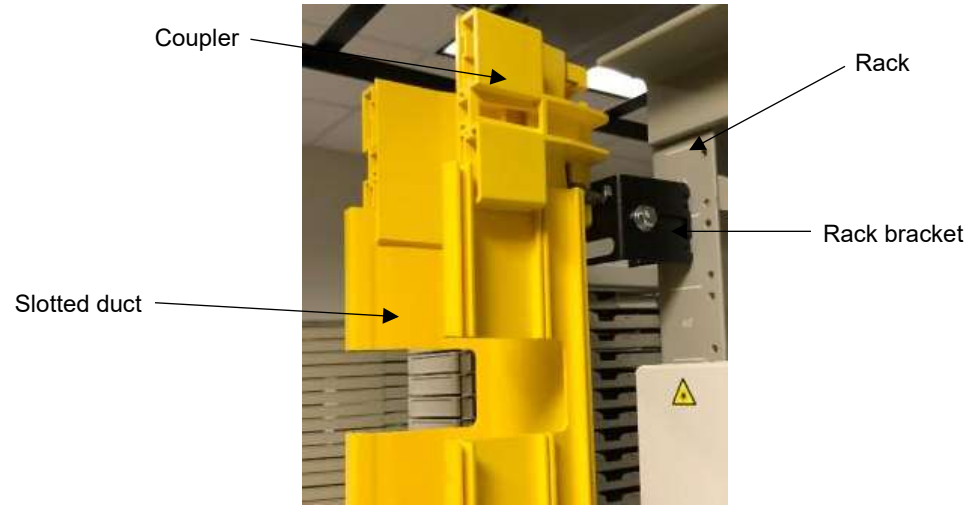

Fig. 4-58: Locking slotted duct to rack bracket with a coupler

12. Repeat steps 10-11 for installing the top piece of the coupler.
13. Place a male or female end of a CableLinks module over the top of the vertical adapter. Line up the bolt holes of the CableLinks module with the bolt holes of the vertical adapter.
14. Insert two (2) $^{3}/_{8}$-16 hex bolts through both components and tighten down with two (2) $^{3}/_{8}$-16 hex nuts.

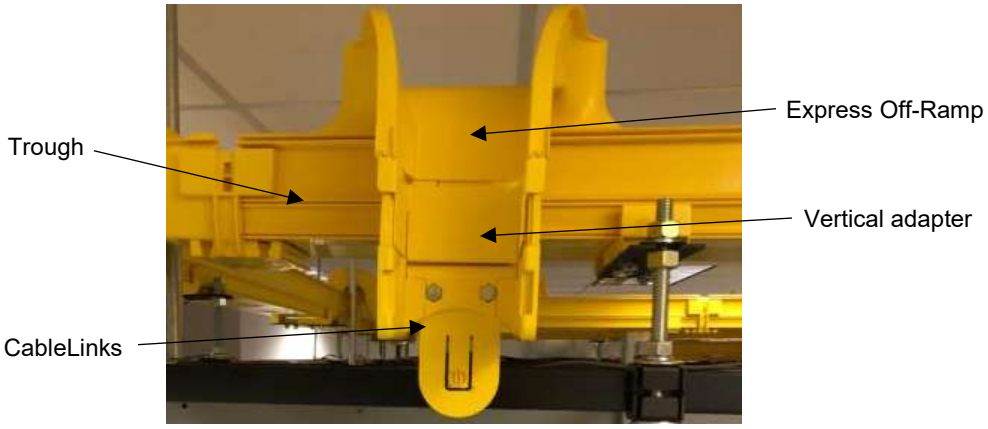

Fig. 4-59: Attaching a CableLinks module to the vertical adapter

15. Attach as many CableLinks modules as needed to drop vertically to the slotted duct.

    NOTE: Leave enough room between CableLinks module and slotted duct to install a trough to CableLinks adapter.

Amphenol Network Solutions
All rights reserved. 150727 A4 06.11.2026
1.509.926.6000 — amphenol-ns.com

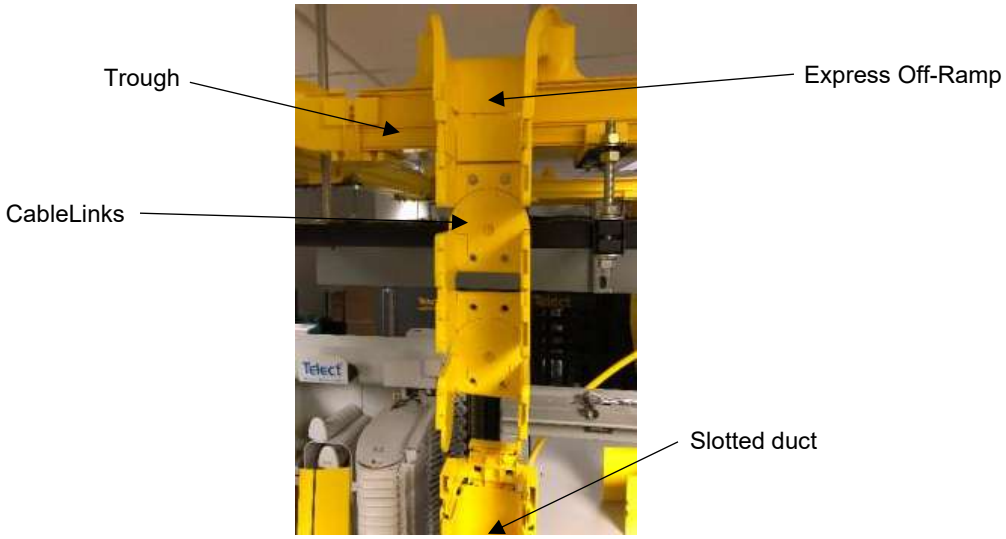

Fig. 4-60: Adding CableLinks modules

16. Undo the top piece of the topmost coupler to install the trough adapter. Attach the end of the trough adapter with the tabs to the coupler attached to the slotted duct.

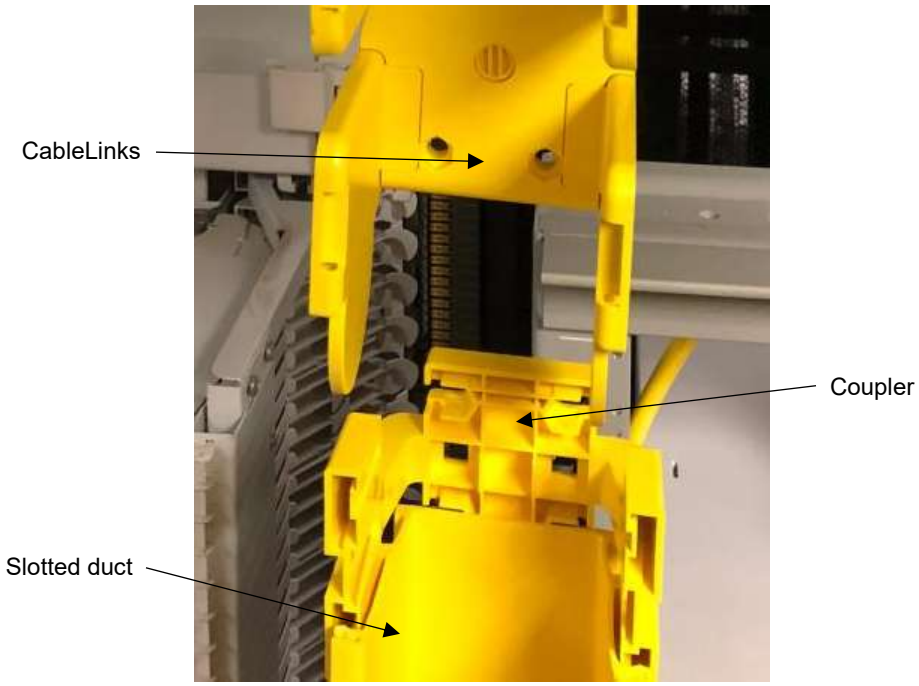

Fig. 4-61: Removing the top piece of the coupler

Amphenol Network Solutions
All rights reserved. 150727 A4 06.11.2026
1.509.926.6000 — amphenol-ns.com

17. Re-attach the top piece of the coupler to connect adapter with the slotted duct. Press down until coupler snaps into place.

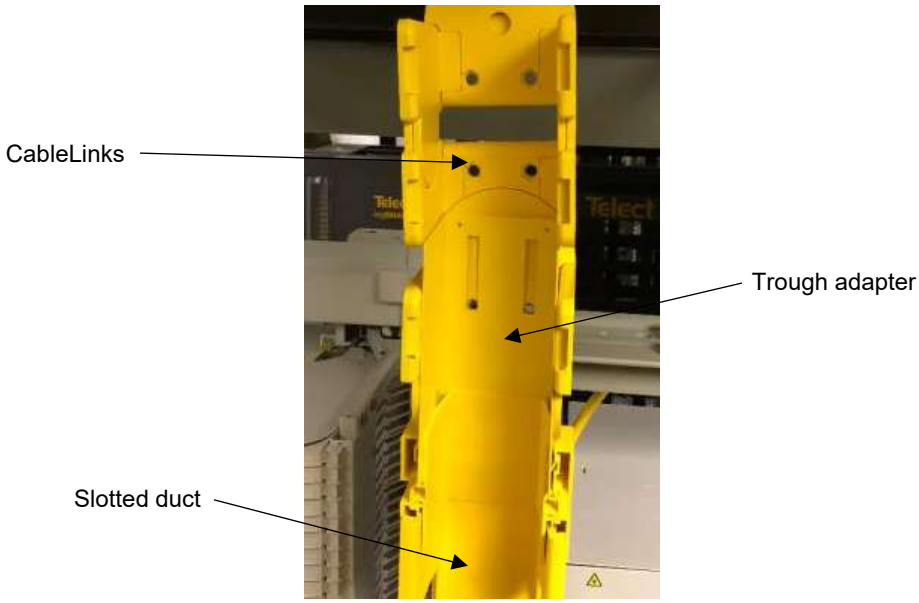

Fig. 4-62: Locking the trough adapter to the slotted duct with a coupler

18. Place the other end of the trough adapter over the top of the CableLinks module. Using two (2) $^{3}/_{8}$-16 hex bolts feed the bolts through both components and secure using two (2) $^{3}/_{8}$-16 hex nuts.

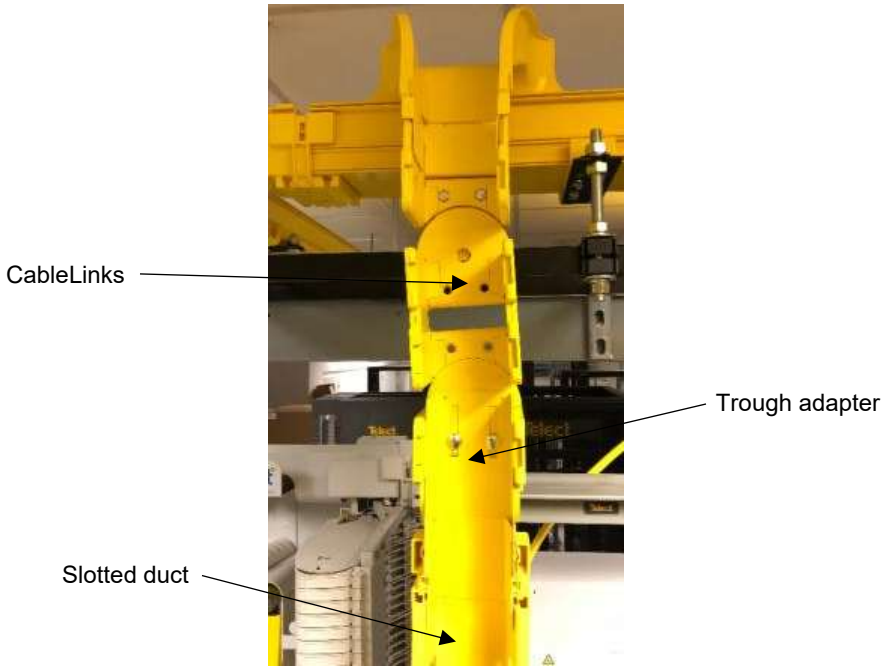

Fig. 4-63: Securing the trough adapter to the CableLinks module

Amphenol Network Solutions
All rights reserved. 150727 A4 06.11.2026
1.509.926.6000 — amphenol-ns.com

19. Attach H-shaped gates to the CableLinks modules to secure fiber.

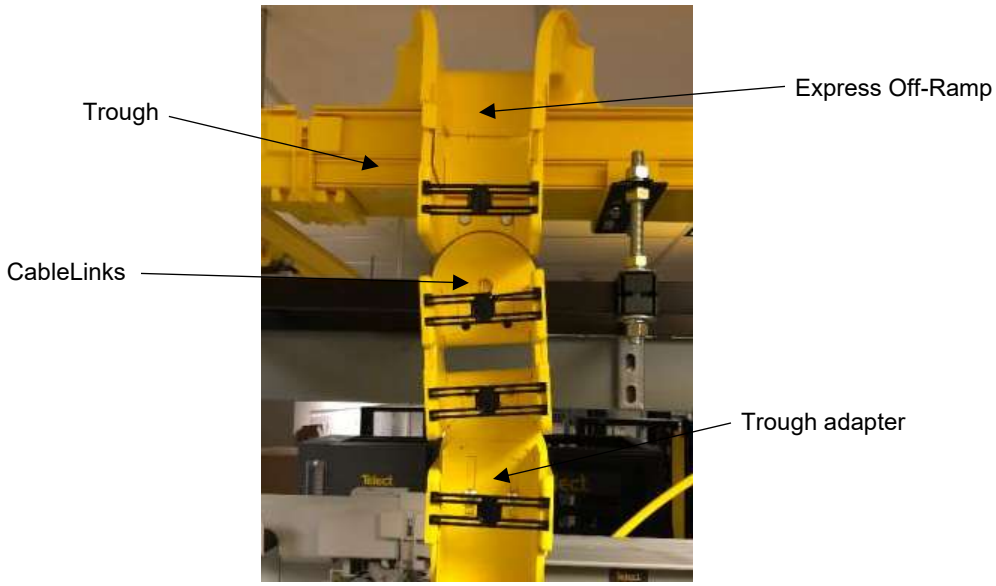

Fig. 4-64: Installing the H-shaped gates to the CableLinks modules

20. Optional: Install slotted duct cover over the slotted duct to protect fiber.

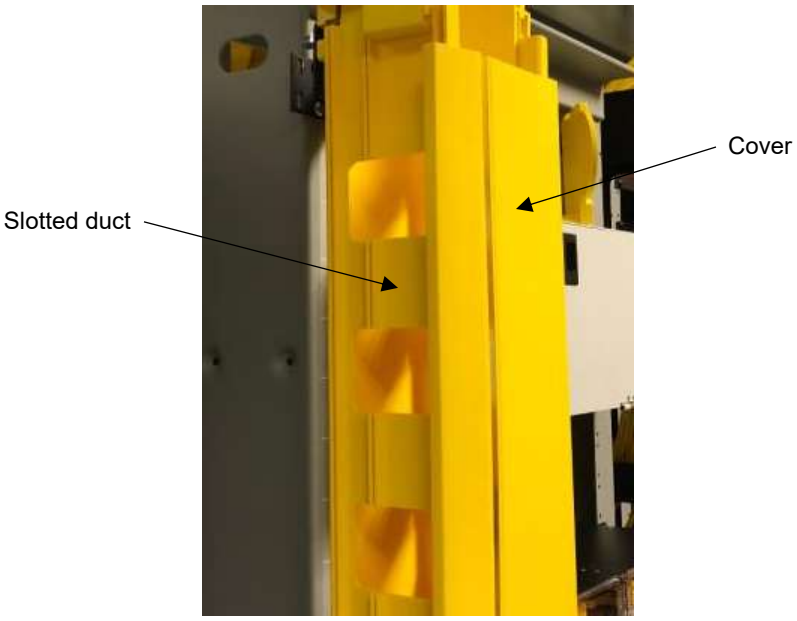

Fig. 4-65: Installing the slotted duct cover

Amphenol Network Solutions
All rights reserved. 150727 A4 06.11.2026
1.509.926.6000 — amphenol-ns.com

4.8 Installing Flexible Tube Adapters and Flexible Tube

Flexible tube adapters connect individual flex tubes to a center drop or drop attachment.

If dropping from a 2-inch or 4-inch component to a single flex tube drop, follow these steps:

1. Align the tube base and the tube clamp with the bottom openings of the flexible tube adapters.

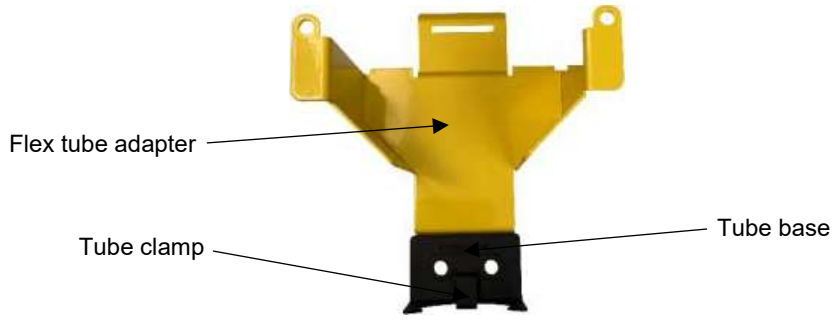

Fig. 4-66: Lining up the tube base and tube clamp with the single tube adapter

2. Feed the two (2) 1/4-20 Phillips-head screws through the three components and secure with two (2) 1/4-20 hex nuts.

   NOTE: Do not fully tighten hex nuts to allow split tube to be placed underneath the tube clamp.

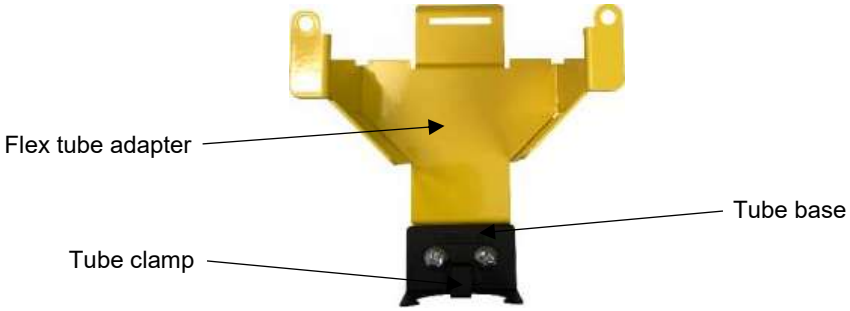

Fig. 4-67: Connecting tube base and tube clamp to single tube adapter

3. Attach the female pins of the flexible tube adapter to the male pins of the component.

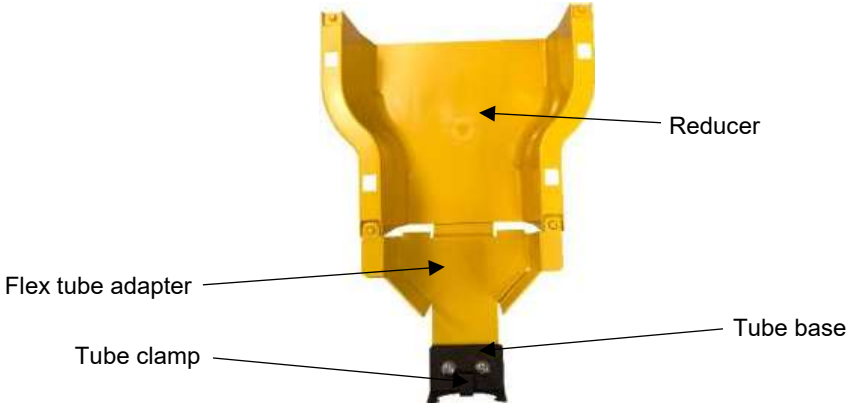

Fig. 4-68: Attaching component to the single tube adapter

Amphenol Network Solutions
All rights reserved. 150727 A4 06.11.2026
1.509.926.6000 — amphenol-ns.com

4. Rotate the flexible tube adapter down until it snaps onto the locking tooth underneath the component.

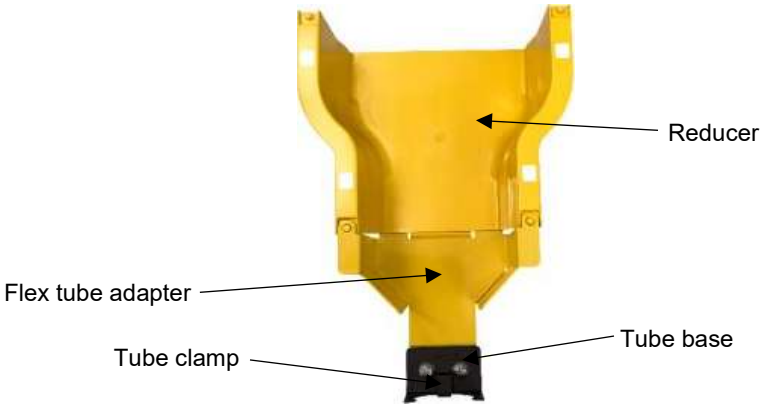

Fig. 4-69: Locking a component to the single tube adapter

5. Slide the flexible tube under the tube clamp and tighten screws with the hex nuts.

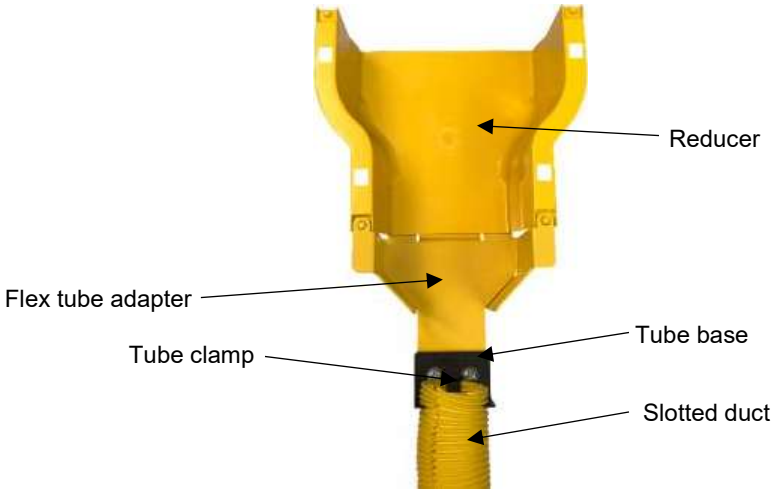

Fig. 4-70: Connecting split tube to the tube clamp

Amphenol Network Solutions
All rights reserved. 150727 A4 06.11.2026
1.509.926.6000 — amphenol-ns.com

If dropping from a 4-inch component to a dual flex tube drop, follow these steps:

1. Align the tube base and the tube clamp with the bottom openings of the flexible tube adapters.

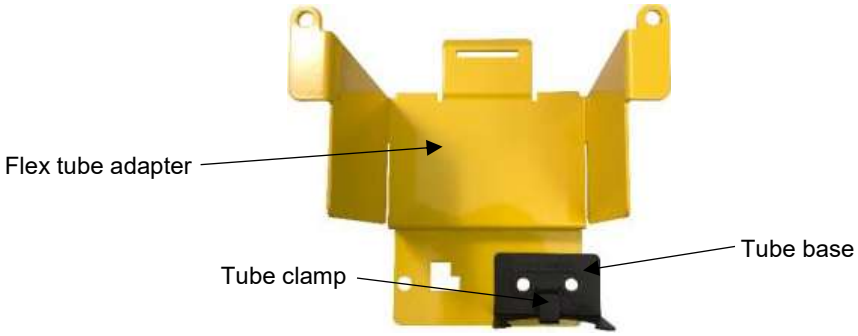

Fig. 4-71: Lining up tube base and tube clamp with the dual tube adapter

2. Feed the two (2) 1/4-20 Phillips-head screws through the three components and secure with two (2) 1/4-20 hex nuts.

   NOTE: Do not fully tighten hex nuts to allow split tube to be placed underneath the tube clamp.

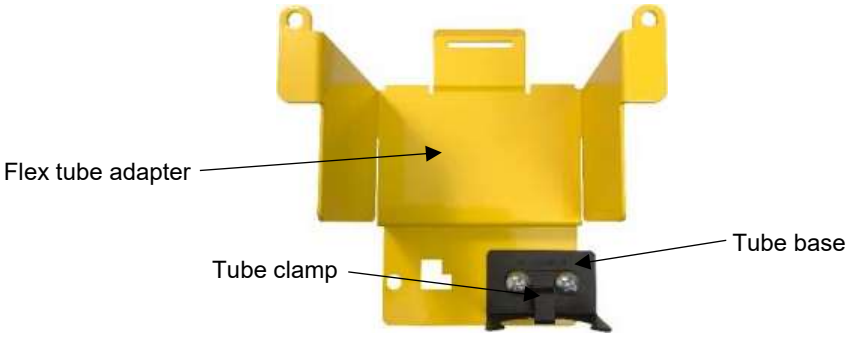

Fig. 4-72: Connecting tube base and clamp to the dual tube adapter

3. Repeat steps 1-2 for attaching the other tube base and tube clamp.

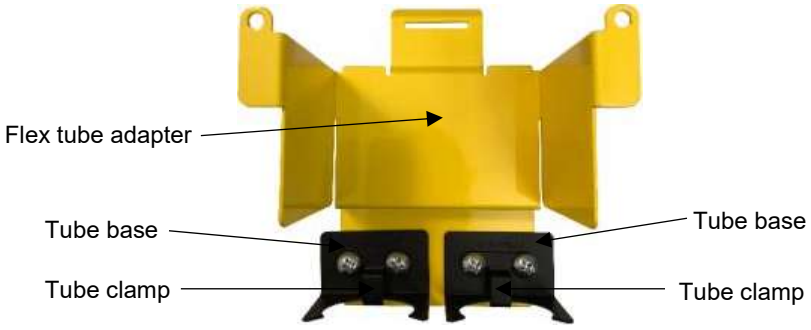

Fig. 4-73: Setting up dual flex tube adapter clamps

Amphenol Network Solutions
All rights reserved. 150727 A4 06.11.2026
1.509.926.6000 — amphenol-ns.com

4. Attach the female pins of the flexible tube adapter to the male pins of the component.

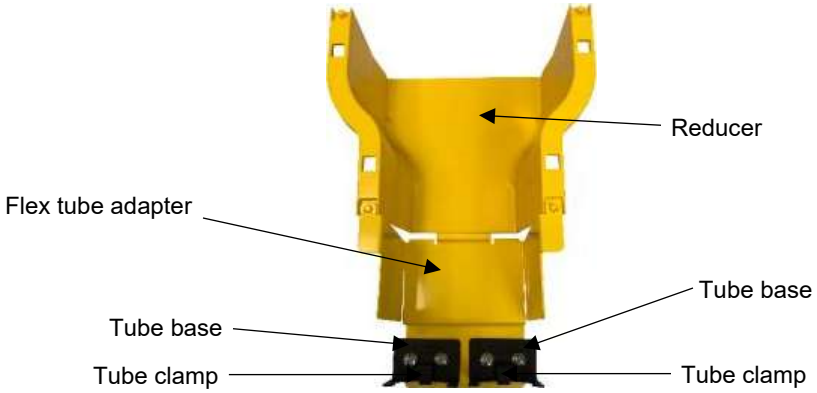

Fig. 4-74: Installing adapter on to a reducer

5. Rotate the flexible tube adapter down until it snaps onto the locking tooth underneath the component.

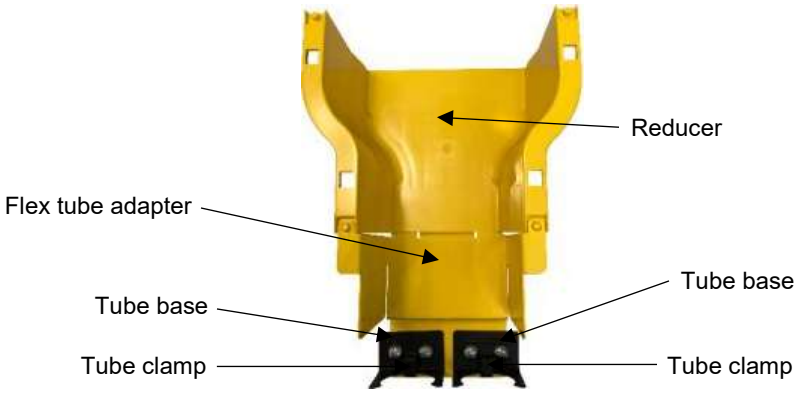

Fig. 4-75: Locking the adapter to the reducer

6. Slide the flexible tube under the tube clamp and tightening screws with the hex nuts.

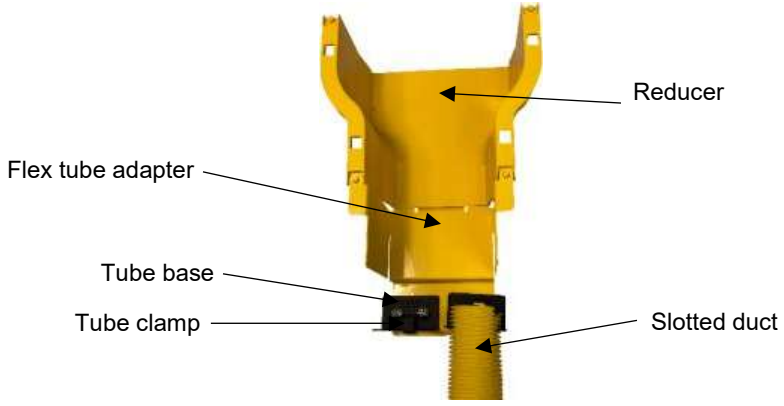

Fig. 4-76: Connecting split tube to the tube clamp

7. Repeat step 6 for attaching the split tube to the other tube base and tube clamp.

Amphenol Network Solutions
All rights reserved. 150727 A4 06.11.2026
1.509.926.6000 — amphenol-ns.com

Section Five: Installing Accessories

5.1 Installing End Caps

An end cap attaches to the end of a fiber trough transition. The end cap provides closure at the end of a horizontal run and attaches to the trough.

For 2-inch End Cap only:

NOTE: The 2-inch end cap attaches directly to 2-inch trough.

1. Line up the trough with the grooves located on the end cap.



Fig. 5-1: Lining up the end cap with the trough

2. Place end cap securely onto the end of the trough, sliding the trough under the small tabs located on the end cap.



Fig. 5-2: Attaching the end cap to the trough

For 4-inch, 6-inch and 12-inch End Caps:

NOTE: These require an end cap connector to fit onto a 4-inch, 6-inch or 12-inch trough.

NOTE: 4-inch, 6-inch and 12-inch end caps will attach directly to a reducer, T-transition, L-transition or intersection.

Amphenol Network Solutions
All rights reserved. 150727 A4 06.11.2026
1.509.926.6000 — amphenol-ns.com

1. Separate the top piece and bottom piece of FastLock Coupler from each other.



Fig. 5-3: Top piece of coupler



Fig. 5-4: Bottom piece of coupler

2. Take the bottom piece of the coupler and install on the end of the trough.



Fig. 5-5: Connecting trough to a coupler

3. Insert the end cap connector onto the other side of the coupler.

   NOTE: Double check to make sure the male pins on the end cap connector are positioned on the outside of the coupler.



Fig. 5-6: Adding an end cap connector to the coupler

4. Insert the female pins of the end cap onto the male pins of the end cap connector.



Fig. 5-7: Attaching end cap to end cap connector

Amphenol Network Solutions
All rights reserved. 150727 A4 06.11.2026
1.509.926.6000 — amphenol-ns.com

5. Rotate end cap down until it snaps onto the locking tooth underneath the component.



Fig. 5-8: Locking the end cap to the end cap connector

6. Take the top piece of the coupler and slide it down into the side slots of the bottom piece.



Fig. 5-9: Connecting the end cap connector to trough

7. Press down on the top piece of coupler until it snaps into place.



Fig. 5-10: Locking end cap connector to trough

Amphenol Network Solutions
All rights reserved. 150727 A4 06.11.2026
1.509.926.6000 — amphenol-ns.com

Section Six: General Information

6.1 Trough Capacity

Recommended density refers to Telcordia recommended cable pile-up (Generic Requirements and Design Consideration for Fiber Distributing Frames, GR-449-CORE, issue 1, March 1995). This includes random jumper placement into the trough system. Trough pile-up refers to the maximum number of fiber jumpers in each cross-section of a Cable Management System (CMS) installation.

Table 3 – Recommended Density

Patch Cord Size	Recommended Density Per Square Inch		(Maximum Density Per Square Inch)
1.6 mm Diameter	120		(142)
2 mm Diameter	90		(103)
3 mm Diameter	40		(46)
Trough Width	**Recommended (Maximum) Density**		
2" Pile-Up	1.6 mm Patch Cords	2 mm Patch Cords	3 mm Patch Cords
2" Trough	480 (568)	360 (408)	160 (176)
4" Trough	960 (1136)	720 (816)	320 (352)
6" Trough	1440 (1704)	1080 (1224)	480 (528)
12" Trough	2880 (3408)	2160 (2448)	960 (1056)
24” Trough	5760 (6816)	4320 (4896)	1920 (2112)
3" Pile-Up	1.6 mm Patch Cords	2 mm Patch Cords	3 mm Patch Cords
4" Trough	1440 (1704)	1080 (1224)	480 (528)
6" Trough	2160 (2556)	1620 (1836)	720 (792)
12" Trough	4320 (5112)	3240 (3672)	1440 (1584)
24” Trough	8640 (10,224)	6480 (7344)	2880 (3168)
4" Pile-Up	1.6 mm Patch Cords	2 mm Patch Cords	3 mm Patch Cords
4" Trough	1920 (2272)	1440 (1632)	640 (704)
6" Trough	2880 (3408)	2160 (2448)	960 (1056)
12" Trough	5760 (6816)	4320 (4896)	1920 (2112)
24” Trough	11,520 (13,632)	8640 (9792)	3840 (4224)

Slack Storage:

Part Number	Recommended (Maximum) Density		
4” Fill	1.6 mm Patch Cords	2 mm Patch Cords	3 mm Patch Cords
027-2000-12SLK	1457 (2082)	938 (1341)	418 (598)
027-2000-12410-S	1457 (2082)	938 (1341)	418 (598)
027-2000-24SLK	3733 (5333)	2389 (3413)	1061 (1517)

NOTE: FIBER COUNTS SHOWN ARE 1/2 OF THE TOTAL CAPACITY TO ALLOW FIBER LOOP (FIBER IN AND OUT)

Amphenol Network Solutions
All rights reserved. 150727 A4 06.11.2026
1.509.926.6000 — amphenol-ns.com

6.2 Technical Specifications

Table 4 – WaveTrax

Fiber Jumper Capacity																	
Capacity		**100%**				**70%**				**Weight per foot of trough including fiber (lb/ft) 100%**				**Weight per foot of trough including fiber (lb/ft) 70%**			
Jacket OD for fiber jumpers		***3mm***	***2mm***	***1.7mm***	***1.6mm***	***3mm***	***2mm***	***1.7mm***	***1.6mm***	***3mm***	***2mm***	***1.7mm***	***1.6mm***	***3mm***	***2mm***	***1.7mm***	***1.6mm***
Trough Size	2"	242	552	761	842	169	386	533	589	1.17	2.67	3.68	4.07	0.82	1.87	2.58	2.85
	4"	915	2049	2825	3185	641	1434	1978	2228	4.42	9.91	13.66	15.4	3.1	6.93	9.56	10.77
	6"	1382	3094	4266	4807	967	2166	2986	3365	6.68	14.96	20.62	23.24	4.68	10.47	14.44	16.27
	12"	2635	5300	8134	9165	1845	4130	5694	6416	12.74	28.52	39.33	44.31	8.92	19.97	27.53	31.02
	24"	4324	9682	13348	15040	3027	6777	9343	10528	20.91	46.81	64.53	72.71	14.63	32.76	45.17	50.9

***** Yellow UL 94V-0 fire retardant plastic, UL2024 riser rated.
Yellow UL 94V-0 fire retardant plastic or cold rolled steel.
Yellow UL 94V-0 fire retardant plastic.

Table 5 – CableLinks

Links*	Yellow UL 94V-0 fire-retardant plastic		
Weight capacity	2" Trough	360 2-mm fibers	0.6 lbs./ft
Components	4" Trough	720 2-mm fibers	1.8 lbs./ft
	6" Trough	1080 2-mm fibers	1.95 lbs./ft
	Universal mounting bracket: 64 lbs. holding capacity per bracket		

* WaveTrax and CableLinks are certified UL 94V-0, GR-63-CORE (NEBS-3) and ETSI.

Amphenol Network Solutions
All rights reserved. 150727 A4 06.11.2026
1.509.926.6000 — amphenol-ns.com