INSTALLATION INSTRUCTIONS

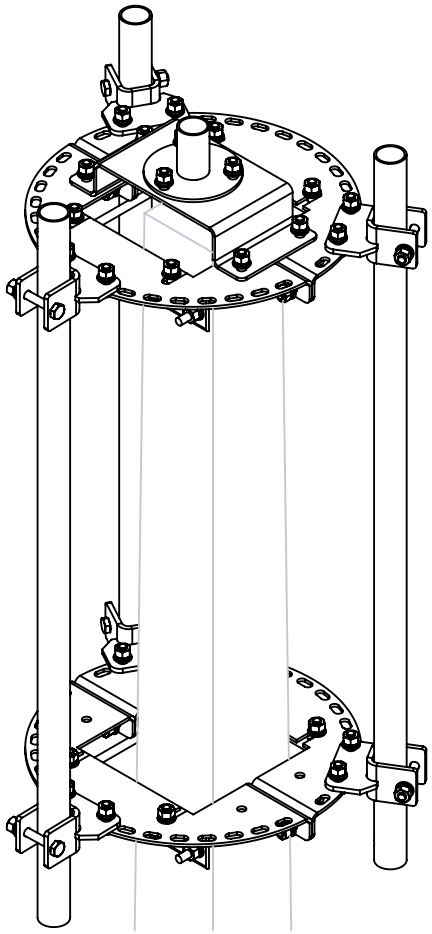

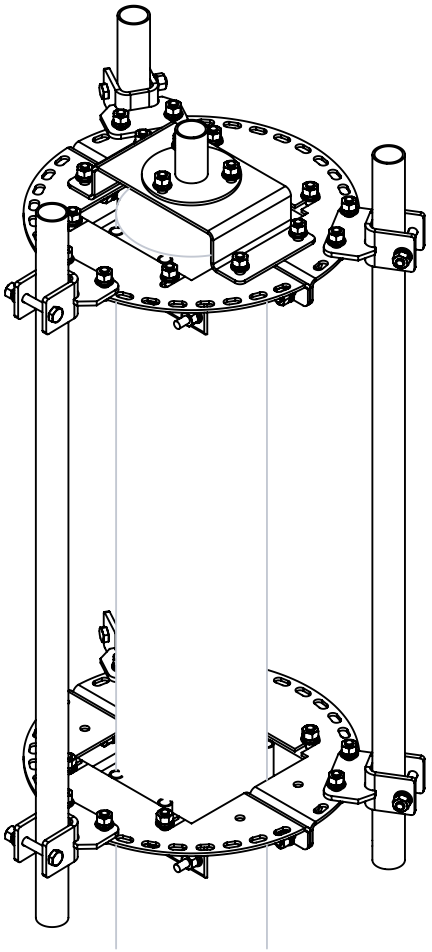

UNPACKING INSTRUCTIONS

- Carefully open the packaging, remove contents and lay out parts on a protective surface to avoid damage.
- Check package contents against the Supplied Parts List in the next page(s) to assure that all components were received undamaged. Do not use damaged or defective parts.
- Carefully read all instructions before attempting installation.

IMPORTANT SAFETY INFORMATION

Install mount with care. Please read these instructions before beginning this installation, and carefully follow all instructions contained herein. Use proper safety equipment and protocol during installation.

Please consult PerfectVision for help if you:

- Don't understand these directions or have any doubts about the safety of the installation.
- Are uncertain or unfamiliar with the nature of the existing structure to be reinforced.

For questions and consulting please call PerfectVision at 1-844-887-6723. Ask for Wireless Sales & Product Support.

Note: Please leave instructions in shelter or cabinet on site for future reference.

Do not use this product for any purpose or in any configuration not explicitly stated in this instruction. We hereby disclaim any and all liability for injury or damage arising from incorrect assembly, incorrect mounting, or incorrect use of this product.

TABLE OF CONTENTS

1. Identifying Onsite Kit .....
Kits with Equipment Pipes.....3
Kits with No Equipment Pipes.....4

2. Supplied Parts List.....
Round Pole Top Mount Configurations.....5
Square Pole Top Mount Configurations.....6
Base Kit: Round Pole Mount 7
Base Kit: Square Pole Mount 8
Clamp Kits: Pole Top Mount Side Clamp Kit 9
Pole Top Mount Kit: Small Cell Top Mount 10
Pipes 11

3. Installation Reference.....
Installing Round Pole Top Mounts 12
Installing Square Pole Top Mounts 13

4. Installation Steps.....
Installing Ring Plates & Clamp Angles 14
Bolting Clamps to Ring Plates & Mast Base Plate.....15
Installing Pole Top Mount Kit & Clamp Kits 16
Attaching Pipes to Top Pole Mount.....17
Installing & Adjusting Mount on Pole.....18

5. Reference Pages.....
Pole Top Mount Installation: Fixed Mounts 19
Pole Top Mount Installation: Swivel Mounts.....20
Alternative Pole Top Mount Installation 21

IDENTIFYING ONSITE KIT REFERENCE PAGE

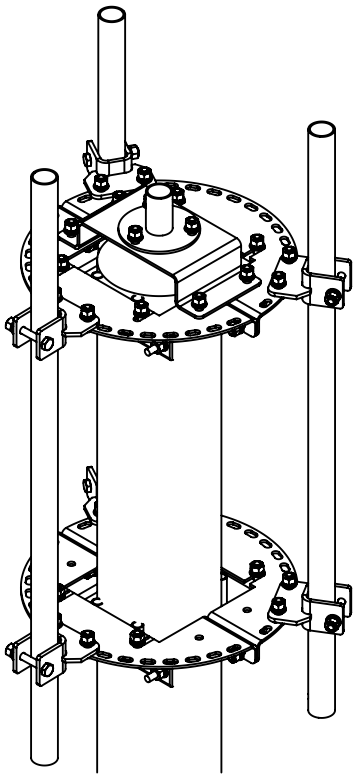

ROUND POLE TOP MOUNT EXAMPLE
PV-PTM-R-TF-P238-EP8

ROUND
TYPE OF TOP MOUNT
EQUIPMENT PIPE SET #

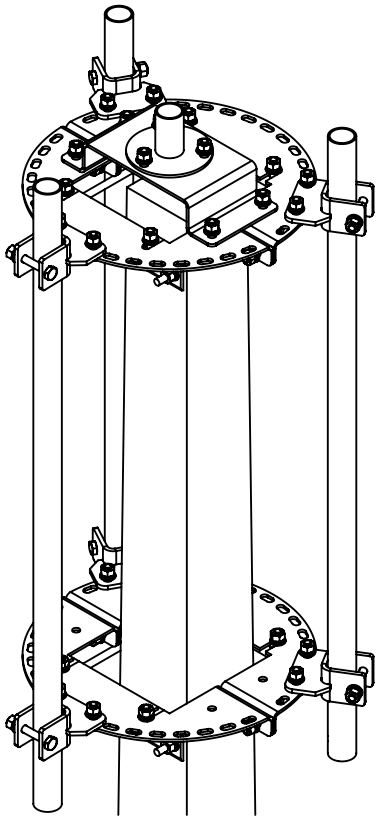

SQUARE POLE TOP MOUNT EXAMPLE
PV-PTM-S-TF-P238-EP8

SQUARE
TYPE OF TOP MOUNT
EQUIPMENT PIPE SET #

EQUIPMENT PIPE SET # REFERENCE		
2x238x48	**EP1**	Two Pipes, 2-3/8" OD Pipe, 48" Pipe Length
2x238x63	**EP2**	Two Pipes, 2-3/8" OD Pipe, 63" Pipe Length
2x278x48	**EP3**	Two Pipes, 2-7/8" OD Pipe, 48" Pipe Length
2x278x63	**EP4**	Two Pipes, 2-7/8" OD Pipe, 63" Pipe Length
2x312x48	**EP5**	Two Pipes, 3-1/2" OD Pipe, 48" Pipe Length
2x312x63	**EP6**	Two Pipes, 3-1/2" OD Pipe, 63" Pipe Length
3x238x48	**EP7**	Three Pipes, 2-3/8" OD Pipe, 48" Pipe Length
3x238x63	**EP8**	Three Pipes, 2-3/8" OD Pipe, 63" Pipe Length
3x278x48	**EP9**	Three Pipes, 2-7/8" OD Pipe, 48" Pipe Length
3x278x63	**EP10**	Three Pipes, 2-7/8" OD Pipe, 63" Pipe Length
3x312x48	**EP11**	Three Pipes, 3-1/2" OD Pipe, 48" Pipe Length
3x312x63	**EP12**	Three Pipes, 3-1/2" OD Pipe, 63" Pipe Length
4x238x48	**EP13**	Four Pipes, 2-3/8" OD Pipe, 48" Pipe Length
4x238x63	**EP14**	Four Pipes, 2-3/8" OD Pipe, 63" Pipe Length
4x278x48	**EP15**	Four Pipes, 2-7/8" OD Pipe, 48" Pipe Length
4x278x63	**EP16**	Four Pipes, 2-7/8" OD Pipe, 63" Pipe Length
4x312x48	**EP17**	Four Pipes, 3-1/2" OD Pipe, 48" Pipe Length
4x312x63	**EP18**	Four Pipes, 3-1/2" OD Pipe, 63" Pipe Length

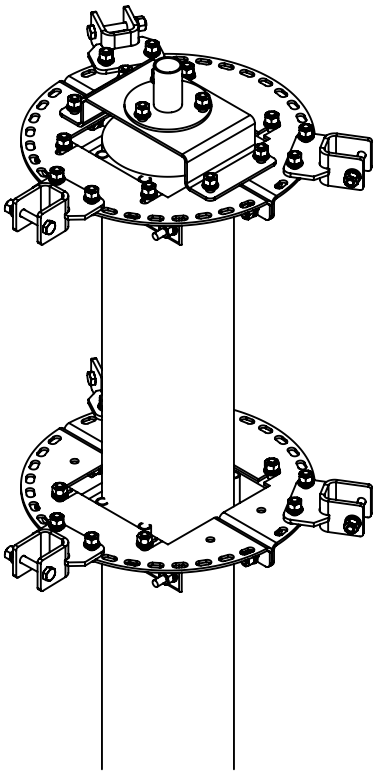

ROUND POLE TOP MOUNT EXAMPLE
PV-PTM-R-TF-P238-3NP20

ROUND
TYPE OF TOP MOUNT
NO PIPE SET #

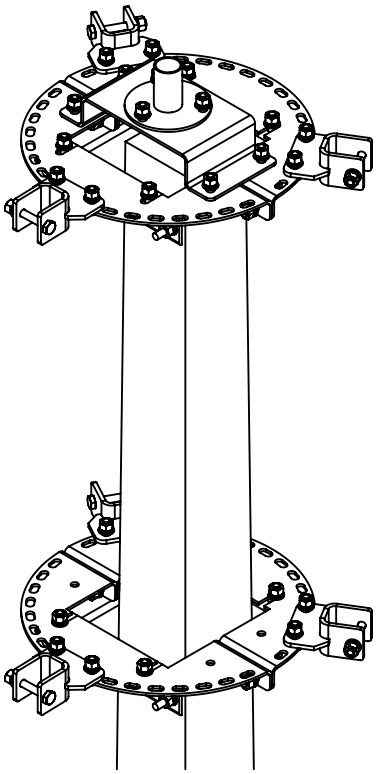

SQUARE POLE TOP MOUNT EXAMPLE
PV-PTM-S-TF-P238-3NP20

SQUARE
TYPE OF TOP MOUNT
NO PIPE SET #

NO PIPE SET # REFERENCE	
2NP20	(2) 2-3/8" Pipe Locations, No Pipe
3NP20	(3) 2-3/8" Pipe Locations, No Pipe
4NP20	(4) 2-3/8" Pipe Locations, No Pipe
2NP25	(2) 2-7/8" Pipe Locations, No Pipe
3NP25	(3) 2-7/8" Pipe Locations, No Pipe
4NP25	(4) 2-7/8" Pipe Locations, No Pipe
2NP30	(2) 3-1/2" Pipe Locations, No Pipe
3NP30	(3) 3-1/2" Pipe Locations, No Pipe
4NP30	(4) 3-1/2" Pipe Locations, No Pipe

NOTE: Below is a Table of Starter Kit Configurations for Round Pole Top Mounts.
Verify onsite Kit.

Please be aware that different kits may be purchased outside of the Starter Kit Configurations and that the Kit onsite may not be listed on the Table below.

The following pages will cover all possible Parts that may be onsite and the following pages will provide general instructions for installation.

Table 1: Round Pole Top Mount Configurations

Part Number	Description	Weight (lbs)	Included Parts													
			PV-PTM-R-B	PV-PTM-S-B	PV-PTM-CLAMP-238	PV-PTM-CLAMP-278	PV-PTM-TF-T3	PV-PTM-TF-P238	PV-PTM-TF-P238X30	PV-PTM-TS-11	PV-PTM-TS-T3	PV-PTM-TS-P238	PV-PTM-TS-P238X30	PV-PIPE-238X48	PV-PIPE-238X63	PV-PIPE-278X63
PV-PTM-R-TF-P238-EP7	Fixed Top Mount, snub, 3x238x48	206	1	-	3	-	-	1	-	-	-	-	-	3	-	-
PV-PTM-R-TF-P238-EP8	Fixed Top Mount, snub, 3x238x63	219	1	-	3	-	-	1	-	-	-	-	-	-	3	-
PV-PTM-R-TF-P238-EP10	Fixed Top Mount, snub, 3x278x63	287	1	-	-	3	-	1	-	-	-	-	-	-	-	3
PV-PTM-R-TF-P238-EP14	Fixed Top Mount, snub, 4x238x63	255	1	-	4	-	-	1	-	-	-	-	-	-	4	-
PV-PTM-R-TF-P238X30-EP7	Fixed Top Mount, 30" TM, 3x238x48	217	1	-	3	-	-	-	1	-	-	-	-	3	-	-
PV-PTM-R-TF-P238X30-EP8	Fixed Top Mount, 30" TM, 3x238x63	231	1	-	3	-	-	-	1	-	-	-	-	-	3	-
PV-PTM-R-TF-P238X30-EP10	Fixed Top Mount, 30" TM, 3x278x63	298	1	-	-	3	-	-	1	-	-	-	-	-	-	3
PV-PTM-R-TF-P238X30-EP14	Fixed Top Mount, 30" TM, 4x238x63	263	1	-	4	-	-	-	1	-	-	-	-	-	4	-
PV-PTM-R-TF-T3-EP7	Fixed Top Mount, Tri-Brkt,3x238x48	210	1	-	3	-	1	-	-	-	-	-	-	3	-	-
PV-PTM-R-TF-T3-EP8	Fixed Top Mount, Tri-Brkt, 3x238x63	224	1	-	3	-	1	-	-	-	-	-	-	-	3	-
PV-PTM-R-TF-T3-EP10	Fixed Top Mount, Tri-Brkt, 3x278x63	291	1	-	-	3	1	-	-	-	-	-	-	-	-	3
PV-PTM-R-TF-T3-EP14	Fixed Top Mount, Tri-Brkt, 4x238x63	237	1	-	4	-	1	-	-	-	-	-	-	-	4	-
PV-PTM-R-TS-11-EP7	Swivel Top Mount,1:1Adpt, 3x238x48	210	1	-	3	-	-	-	-	1	-	-	-	3	-	-
PV-PTM-R-TS-11-EP8	Swivel Top Mount,1:1Adpt, 3x238x63	224	1	-	3	-	-	-	-	1	-	-	-	-	3	-
PV-PTM-R-TS-11-EP10	Swivel Top Mount,1:1Adpt, 3x278x63	291	1	-	-	3	-	-	-	1	-	-	-	-	-	3
PV-PTM-R-TS-11-EP14	Swivel Top Mount,1:1Adpt, 4x238x63	255	1	-	4	-	-	-	-	1	-	-	-	-	4	-
PV-PTM-R-TS-P238-EP7	Swivel Top Mount, snub, 3x238x48	209	1	-	3	-	-	-	-	-	-	1	-	3	-	-
PV-PTM-R-TS-P238-EP8	Swivel Top Mount, snub, 3x238x63	222	1	-	3	-	-	-	-	-	-	1	-	-	3	-
PV-PTM-R-TS-P238-EP10	Swivel Top Mount, snub, 3x278x63	290	1	-	-	3	-	-	-	-	-	1	-	-	-	3
PV-PTM-R-TS-P238-EP14	Swivel Top Mount, snub, 4x238x63	254	1	-	4	-	-	-	-	-	-	1	-	-	4	-
PV-PTM-R-TS-P238X30-EP7	Swivel Top Mount, 30" TM, 3x238x48	220	1	-	3	-	-	-	-	-	-	-	1	3	-	-
PV-PTM-R-TS-P238X30-EP8	Swivel Top Mount, 30" TM, 3x238x63	234	1	-	3	-	-	-	-	-	-	-	1	-	3	-
PV-PTM-R-TS-P238X30-EP10	Swivel Top Mount, 30" TM, 3x278x63	301	1	-	-	3	-	-	-	-	-	-	1	-	-	3
PV-PTM-R-TS-P238X30-EP14	Swivel Top Mount, 30" TM, 4x238x63	265	1	-	4	-	-	-	-	-	-	-	1	-	4	-
PV-PTM-R-TS-T3-EP7	Swivel Top Mount, Tri-Brkt,3x238x48	210	1	-	3	-	-	-	-	-	1	-	-	3	-	-
PV-PTM-R-TS-T3-EP8	Swivel Top Mount, Tri-Brkt,3x238x63	224	1	-	3	-	-	-	-	-	1	-	-	-	3	-
PV-PTM-R-TS-T3-EP10	Swivel Top Mount, Tri-Brkt,3x278x63	291	1	-	-	3	-	-	-	-	1	-	-	-	-	3
PV-PTM-R-TS-T3-EP14	Swivel Top Mount, Tri-Brkt,4x238x63	256	1	-	4	-	-	-	-	-	1	-	-	-	4	-

Supplied Parts List

NOTE: DRAWINGS NTS

NOTE: Below is a Table of Starter Kit Configurations for Square Pole Top Mounts.
Verify onsite Kit.

Please be aware that different kits may be purchased outside of the Starter Kit Configurations and that the Kit onsite may not be listed on the Table below.

The following pages will cover all possible Parts that may be onsite and the following pages will provide general instructions for installation.

Table 2: Square Pole Top Mount Configurations

Part Number	Description	Weight (lbs)	Included Parts													
			PV-PTM-R-B	PV-PTM-S-B	PV-PTM-CLAMP-238	PV-PTM-CLAMP-278	PV-PTM-TF-T3	PV-PTM-TF-P238	PV-PTM-TF-P238X30	PV-PTM-TS-11	PV-PTM-TS-T3	PV-PTM-TS-P238	PV-PTM-TS-P238X30	PV-PIPE-238X48	PV-PIPE-238X63	PV-PIPE-278X63
PV-PTM-S-TF-P238-EP7	Fixed Top Mount, snub, 3x238x48	203	-	1	3	-	-	1	-	-	-	-	-	3	-	-
PV-PTM-S-TF-P238-EP8	Fixed Top Mount, snub, 3x238x63	216	-	1	3	-	-	1	-	-	-	-	-	-	3	-
PV-PTM-S-TF-P238-EP10	Fixed Top Mount, snub, 3x278x63	284	-	1	-	3	-	1	-	-	-	-	-	-	-	3
PV-PTM-S-TF-P238-EP14	Fixed Top Mount, snub, 4x238x63	248	-	1	4	-	-	1	-	-	-	-	-	-	4	-
PV-PTM-S-TF-P238X30-EP7	Fixed Top Mount, 30" TM, 3x238x48	214	-	1	3	-	-	-	1	-	-	-	-	3	-	-
PV-PTM-S-TF-P238X30-EP8	Fixed Top Mount, 30" TM, 3x238x63	228	-	1	3	-	-	-	1	-	-	-	-	-	3	-
PV-PTM-S-TF-P238X30-EP10	Fixed Top Mount, 30" TM, 3x278x63	295	-	1	-	3	-	-	1	-	-	-	-	-	-	3
PV-PTM-S-TF-P238X30-EP14	Fixed Top Mount, 30" TM, 4x238x63	260	-	1	4	-	-	-	1	-	-	-	-	-	4	-
PV-PTM-S-TF-T3-EP7	Fixed Top Mount, Tri-Brkt,3x238x48	207	-	1	3	-	1	-	-	-	-	-	-	3	-	-
PV-PTM-S-TF-T3-EP8	Fixed Top Mount, Tri-Brkt, 3x238x63	221	-	1	3	-	1	-	-	-	-	-	-	-	3	-
PV-PTM-S-TF-T3-EP10	Fixed Top Mount, Tri-Brkt, 3x278x63	288	-	1	-	3	1	-	-	-	-	-	-	-	-	3
PV-PTM-S-TF-T3-EP14	Fixed Top Mount, Tri-Brkt, 4x238x63	234	-	1	4	-	1	-	-	-	-	-	-	-	4	-
PV-PTM-S-TS-11-EP7	Swivel Top Mount,1:1Adpt, 3x238x48	207	-	1	3	-	-	-	-	1	-	-	-	3	-	-
PV-PTM-S-TS-11-EP8	Swivel Top Mount,1:1Adpt, 3x238x63	221	-	1	3	-	-	-	-	1	-	-	-	-	3	-
PV-PTM-S-TS-11-EP10	Swivel Top Mount,1:1Adpt, 3x278x63	288	-	1	-	3	-	-	-	1	-	-	-	-	-	3
PV-PTM-S-TS-11-EP14	Swivel Top Mount,1:1Adpt, 4x238x63	252	-	1	4	-	-	-	-	1	-	-	-	-	4	-
PV-PTM-S-TS-P238-EP7	Swivel Top Mount, snub, 3x238x48	206	-	1	3	-	-	-	-	-	-	1	-	3	-	-
PV-PTM-S-TS-P238-EP8	Swivel Top Mount, snub, 3x238x63	219	-	1	3	-	-	-	-	-	-	1	-	-	3	-
PV-PTM-S-TS-P238-EP10	Swivel Top Mount, snub, 3x278x63	287	-	1	-	3	-	-	-	-	-	1	-	-	-	3
PV-PTM-S-TS-P238-EP14	Swivel Top Mount, snub, 4x238x63	251	-	1	4	-	-	-	-	-	-	1	-	-	4	-
PV-PTM-S-TS-P238X30-EP7	Swivel Top Mount, 30" TM, 3x238x48	217	-	1	3	-	-	-	-	-	-	-	1	3	-	-
PV-PTM-S-TS-P238X30-EP8	Swivel Top Mount, 30" TM, 3x238x63	231	-	1	3	-	-	-	-	-	-	-	1	-	3	-
PV-PTM-S-TS-P238X30-EP10	Swivel Top Mount, 30" TM, 3x278x63	298	-	1	-	3	-	-	-	-	-	-	1	-	-	3
PV-PTM-S-TS-P238X30-EP14	Swivel Top Mount, 30" TM, 4x238x63	262	-	1	4	-	-	-	-	-	-	-	1	-	4	-
PV-PTM-S-TS-T3-EP7	Swivel Top Mount, Tri-Brkt,3x238x48	207	-	1	3	-	-	-	-	-	1	-	-	3	-	-
PV-PTM-S-TS-T3-EP8	Swivel Top Mount, Tri-Brkt,3x238x63	221	-	1	3	-	-	-	-	-	1	-	-	-	3	-
PV-PTM-S-TS-T3-EP10	Swivel Top Mount, Tri-Brkt,3x278x63	288	-	1	-	3	-	-	-	-	1	-	-	-	-	3
PV-PTM-S-TS-T3-EP14	Swivel Top Mount, Tri-Brkt,4x238x63	263	-	1	4	-	-	-	-	-	1	-	-	-	4	-

Supplied Parts List

BASE KIT: ROUND POLE MOUNT

NOTE: DRAWINGS NTS

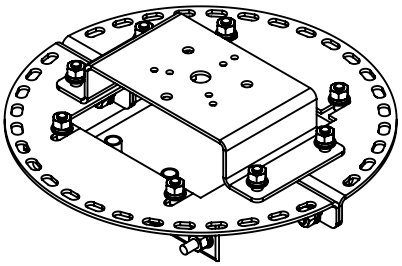

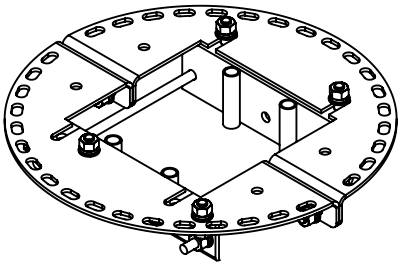

PV-PTM-R-B
ROUND POLE TOP MOUNT
WEIGHT: 219.29 LBS

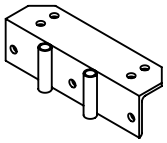

W097-194-01
CLAMP ANGLE WELDMENT
QTY: 4
WEIGHT: 10.37 LBS EACH

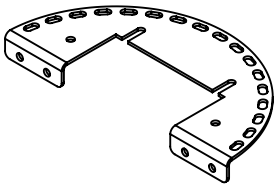

P597-376-01
RING PLATE
QTY: 4
WEIGHT: 11.91 LBS EACH

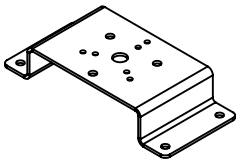

P597-452-01
TOP MAST BASE PLATE
QTY: 1
WEIGHT: 12.87 LBS EACH

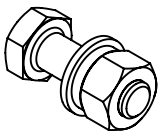

HK1-1020-12
5/8" X 2" BOLT KIT
QTY: 20
WEIGHT: 0.47 LBS EACH

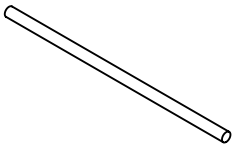

H10-1016-10
5/8" X 16" ALL THREAD
QTY: 4
WEIGHT: 1.40 LBS EACH

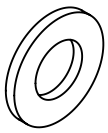

H03-0010-02
5/8" DIA FLAT WASHER
QTY: 8
WEIGHT: 0.03 LBS EACH

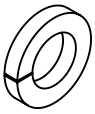

H04-0010-01
5/8" DIA LOCK WASHER
QTY: 8
WEIGHT: 0.03 LBS EACH

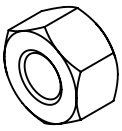

H02-0010-11
5/8" DIA NUT
QTY: 8
WEIGHT: 0.13 LBS EACH

Supplied Parts List

BASE KIT: SQUARE POLE MOUNT

NOTE: DRAWINGS NTS

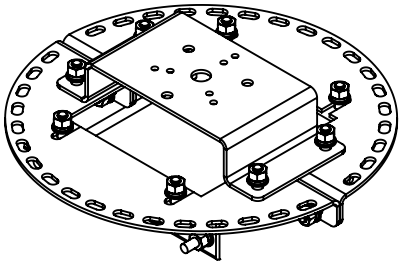

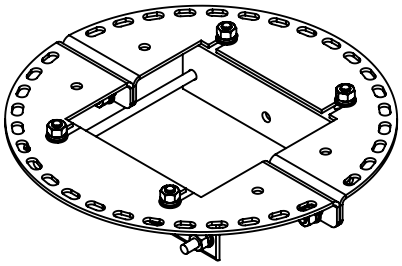

PV-PTM-S-B
SQUARE POLE TOP MOUNT
WEIGHT: 248.15 LBS

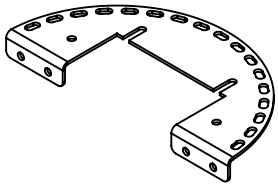

P597-376-01
RING PLATE
QTY: 4
WEIGHT: 11.91 LBS EACH

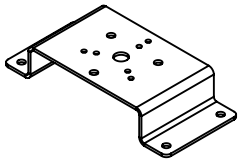

P597-452-01
TOP MAST BASE PLATE
QTY: 1
WEIGHT: 12.87 LBS EACH

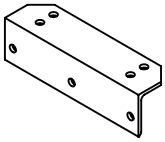

P297-098-01
CLAMP ANGLE
QTY: 4
WEIGHT: 9.61 LBS EACH

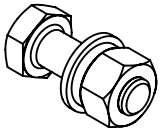

HK1-1020-12
5/8" X 2" BOLT KIT
QTY: 20
WEIGHT: 0.47 LBS EACH

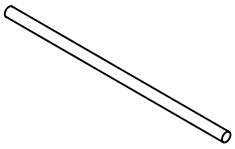

H10-1016-10
5/8" X 16" ALL THREAD
QTY: 4
WEIGHT: 1.40 LBS EACH

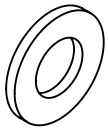

H03-0010-02
5/8" DIA FLAT WASHER
QTY: 8
WEIGHT: 0.03 LBS EACH

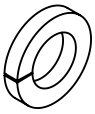

H04-0010-01
5/8" DIA LOCK WASHER
QTY: 8
WEIGHT: 0.03 LBS EACH

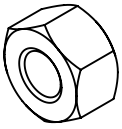

H02-0010-11
5/8" DIA NUT
QTY: 8
WEIGHT: 0.13 LBS EACH

Supplied Parts List

NOTE: DRAWINGS NTS

CLAMP KIT: POLE TOP MOUNT SIDE CLAMP KIT

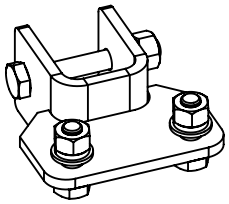

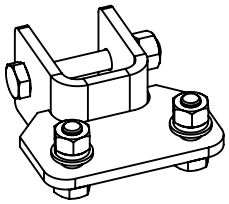

PV-PTM-CLAMP-238
2-3/8" OD PIPE CLAMP KIT
WEIGHT: 13.19 LBS

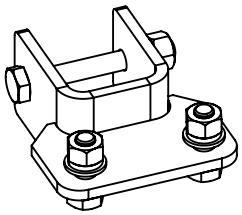

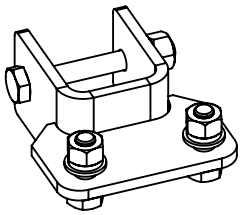

PV-PTM-CLAMP-278
2-7/8" OD PIPE CLAMP KIT
WEIGHT: 14.22 LBS

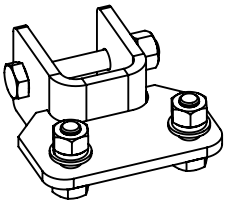

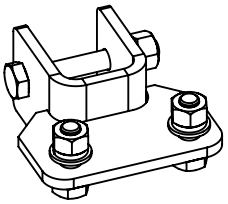

PV-PTM-CLAMP-312
3-1/2" OD PIPE CLAMP KIT
WEIGHT: 13.19 LBS

Parts included in PV-PTM-CLAMP-###:

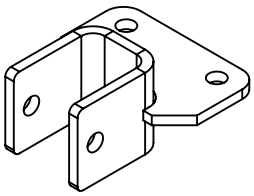

CLAMP WELDMENT
2-3/8" OR 2-7/8" OR 3-1/2"
PIPE CLAMP
QTY: 2
WEIGHT: 4.98 LBS

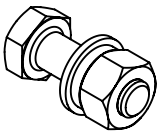

HK1-1020-12
5/8" X 2" BOLT KIT
QTY: 4
WEIGHT: 0.47 LBS

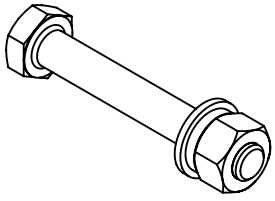

HK1-1045-12
5/8" x 4-1/2" BOLT KIT
QTY: 2
WEIGHT: 0.68 LBS

Supplied Parts List

NOTE: DRAWINGS NTS

POLE TOP MOUNT KIT: SMALL CELL TOP MOUNT

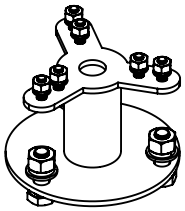

PV-PTM-TF-T3
FIXED TRI-BRACKET MOUNT
WEIGHT: 7.08 LBS

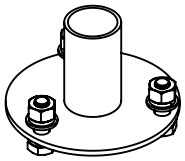

PV-PTM-TF-P238
FIXED 2-3/8" OD PIPE MOUNT
WEIGHT: 5.41 LBS

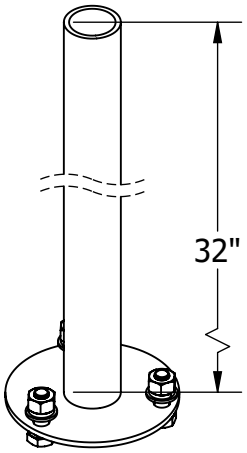

PV-PTM-TF-P238X30
FIXED 2-3/8" OD 30" PIPE MOUNT
WEIGHT: 17.62 LBS

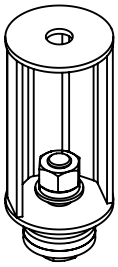

PV-PTM-TS-11
SWIVEL 1:1 ADAPTER MOUNT
WEIGHT: 9.50 LBS

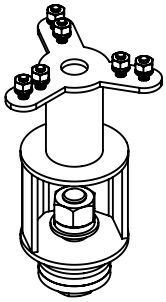

PV-PTM-TS-T3
SWIVEL TRI-BRACKET MOUNT
WEIGHT: 10.08 LBS

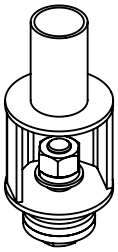

PV-PTM-TS-P238
SWIVEL 2-3/8" OD PIPE MOUNT
WEIGHT: 8.41 LBS

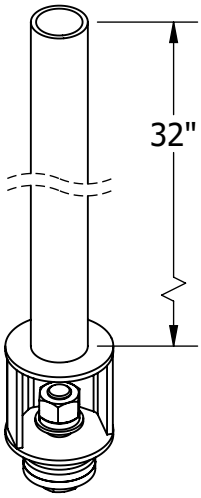

PV-PTM-TS-P238X30
SWIVEL 2-3/8" OD 30" PIPE MOUNT
WEIGHT: 20.63 LBS

Note: Different sized Pipes may be purchased outside of the Starter Kit Configurations.

All Pipes will install similarly but it is important to verify Clamp Kits with Pipes for correct fit up. See Table 3 below for all possible Pipe sizes and Clamp Kit compatibility.

Table 3: Pipe Sizing & Compatibility

Part Number	Description	Weight (lbs)	Clamp Kit Compatibility
PIPE-238X48	NPS 2 SCH 40 Pipe, 48" Length	15	PV-PTM-CLAMP-238
PIPE-238X63	NPS 2 SCH 40 Pipe, 63" Length	19	
PIPE-278X48	NPS 2-1/2 SCH 40 Pipe, 48" Length	23	PV-PTM-CLAMP-278
PIPE-278X63	NPS 2-1/2 SCH 40 Pipe, 63" Length	31	
PIPE-312X48	NPS 3 SCH 40 Pipe, 48" Length	30	PV-PTM-CLAMP-312
PIPE-312X63	NPS 3 SCH 40 Pipe, 63" Length	40	

STARTER CONFIGURATION PIPES:

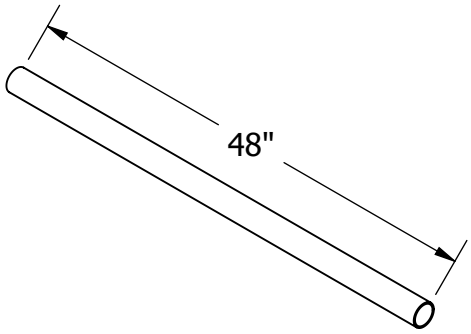

PV-PIPE-238X48
NPS 2 SCH 40, 48" PIPE
WEIGHT: 14.64 LBS

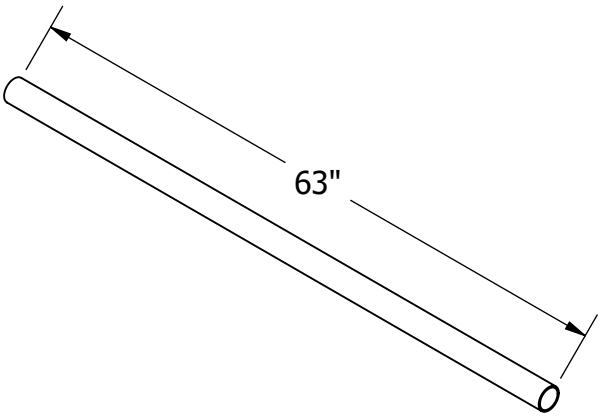

PV-PIPE-238X63
NPS 2 SCH 40, 63" PIPE
WEIGHT: 19.23 LBS

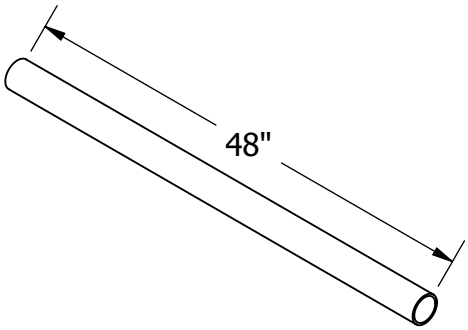

PV-PIPE-278X48
NPS 2-1/2 SCH 40, 48" PIPE
WEIGHT: 23.23 LBS

IN THE INSTANCE WHERE (1) SINGLE PIPE IS PURCHASED (OUTSIDE OF THE STARTER KIT CONFIGURATION): PIPE MAY BE CUT DOWN TO PREFERRED LENGTH(S) AND SHOULD BE COLD GALVANIZED ON BOTH ENDS FOR MOUNT USE.

PerfectVision assumes no responsibility for existing Pole structural integrity

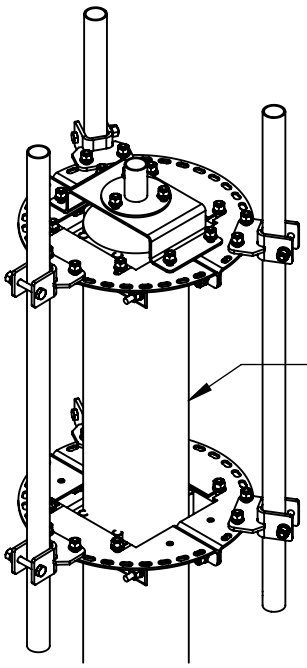

ROUND POLE TOP MOUNT
PV-PTM-R-TF-P238-EP8 SHOWN

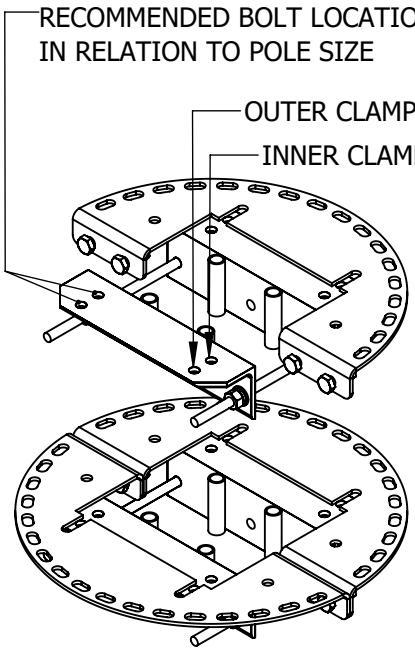

PARTS PARTIALLY HIDDEN FOR CLARITY

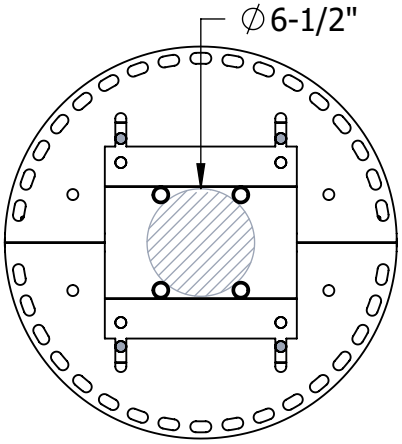

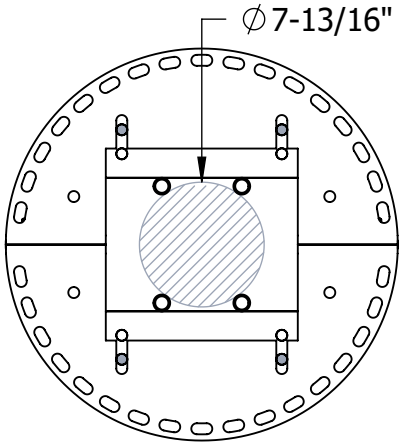

EXPECT TO USE OUTER CLAMP HOLES FOR ∅6-1/2" TO ∅7-13/16" POLES

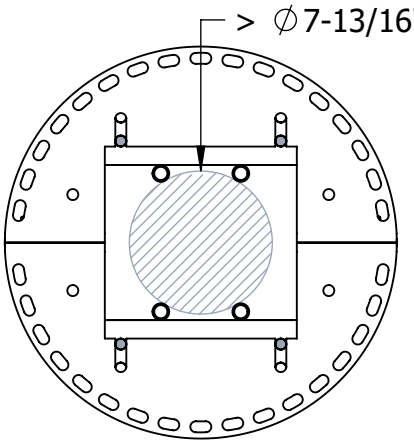

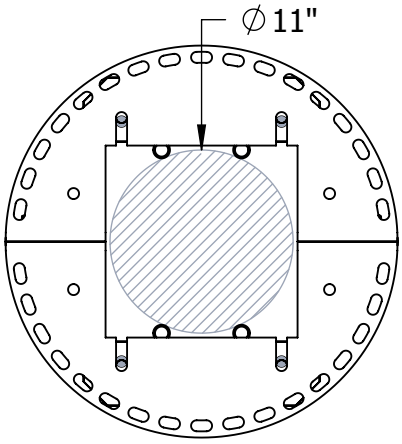

EXPECT TO USE INNER CLAMP HOLES FOR > ∅7-13/16" TO ∅11" POLES

PerfectVision assumes no responsibility for existing Pole structural integrity

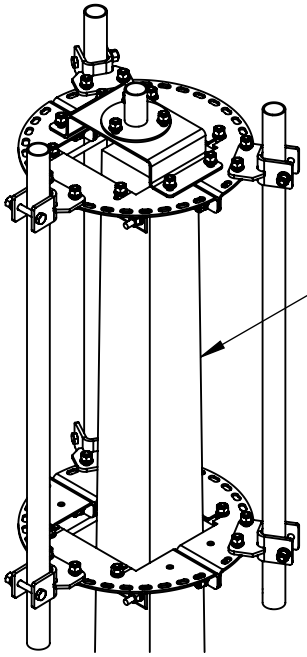

MOUNT FITS CONCRETE SQUARE POLES
MAX: 11.5" X 11.5"
MIN: 7" X 7"

NOTE: TAPERED POLE SHOULD BE MEASURED NEAR TOP (FOR MOUNT INSTALLATION)

SQUARE POLE TOP MOUNT
PV-PTM-S-TF-P238-EP8 SHOWN

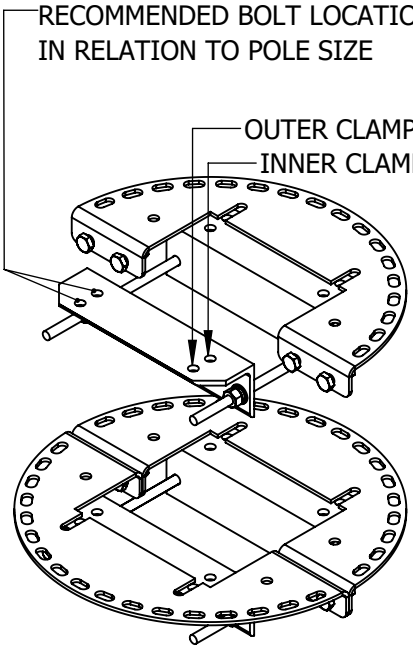

PARTS PARTIALLY HIDDEN FOR CLARITY

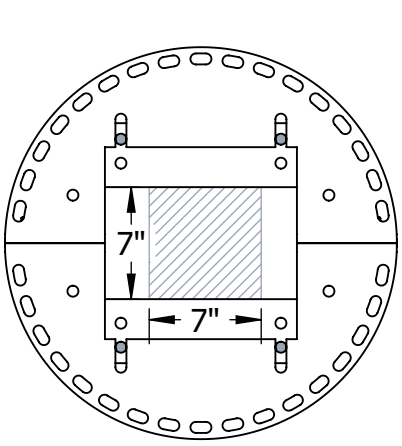

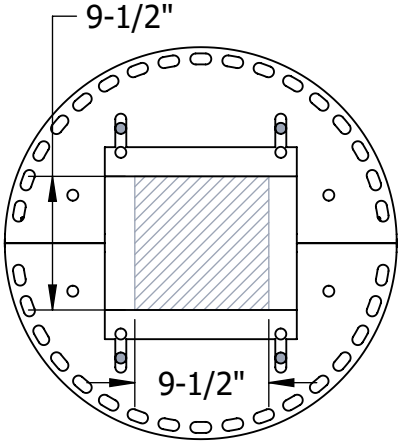

EXPECT TO USE OUTER CLAMP HOLES FOR 7" TO 9-1/2" SQ. POLES

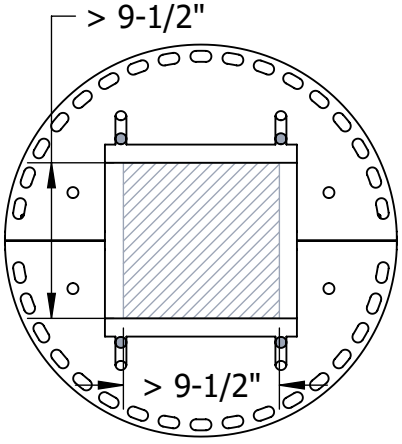

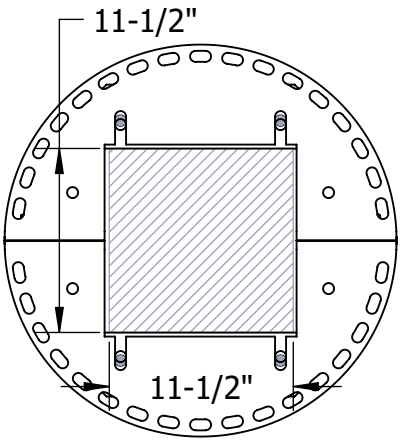

EXPECT TO USE INNER CLAMP HOLES FOR > 9-1/2" TO 11-1/2" SQ. POLES

STEP 1 ATTACHING RING PLATES TOGETHER

The following installation instructions feature PV-PTM-S-TF-P238-EP8. All other mounts will install similarly; see Pages 2-4, to verify the Top Mount configuration onsite. Once verified, install accordingly.

If possible at ground level, begin installation by bolting together Ring Plates using 5/8" X 2" Bolt kits as shown below:

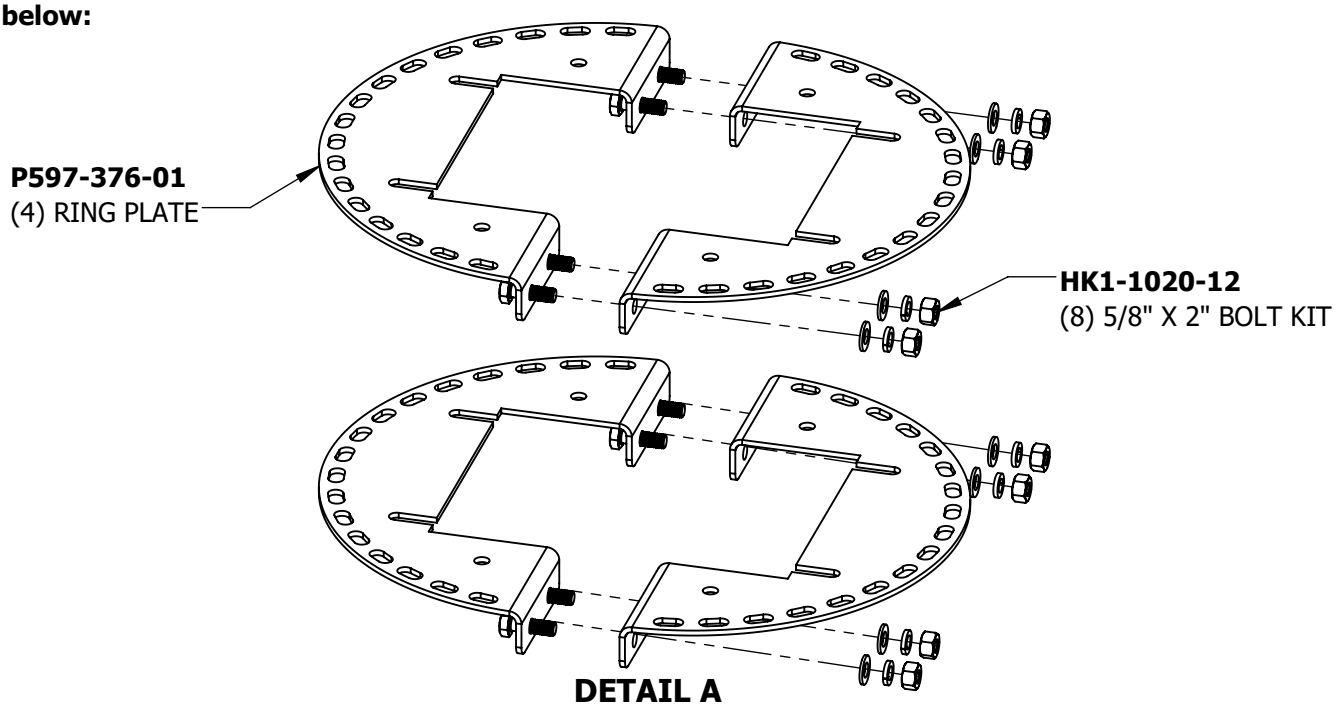

DETAIL A
BOLTING RING PLATES TOGETHER

STEP 2 ATTACHING CLAMP ANGLE / CLAMP ANGLE WELDMENT USING ALL THREAD HARDWARE

Measure the pole size at mounting point (top of pole) before attaching Clamp Angle / Clamp Angle Weldment to Ring Plates. See Pages 10-11, for Clamp installation reference. **Do not fully tighten All Thread hardware until step 8.**

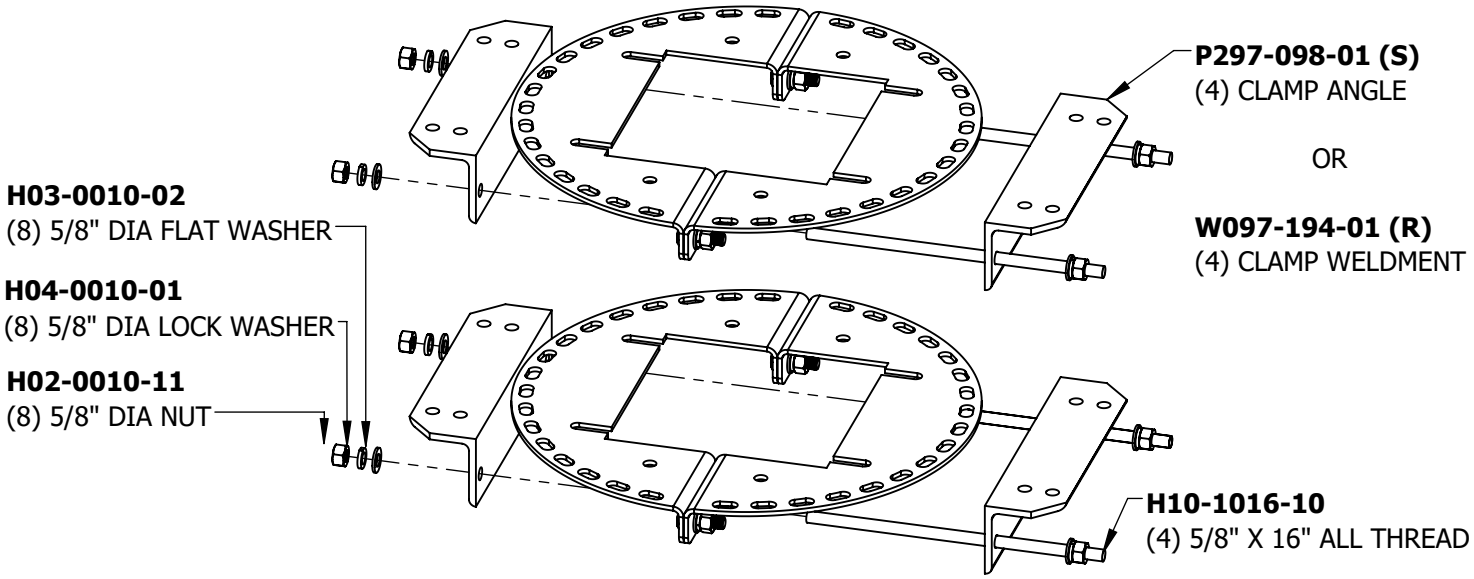

DETAIL B
ATTACHING CLAMPS USING ALL THREAD

STEP 3 BOLTING CLAMPS LOOSELY TO RING PLATES

Once Clamps are adjusted from Step 2, use 5/8" X 2" Bolt kits to bolt Clamps to Ring Plates as shown below.
Do not fully tighten hardware until step 8 since Clamps may need adjustment once mounted on existing Pole.

HK1-1020-12
(8) 5/8" X 2" BOLT KIT

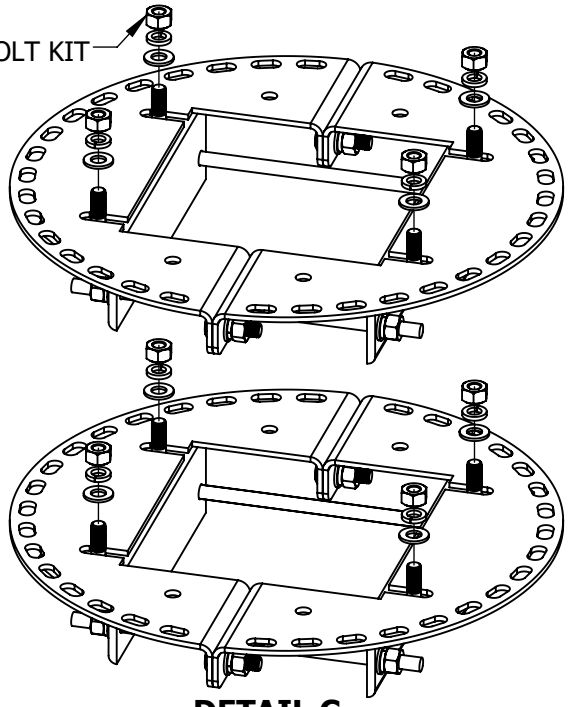

DETAIL C
LOOSELY BOLTING CLAMPS TO RING PLATE

BOLT LOCATION ON CLAMP MAY VARY BASED ON STEP 2. BOLT DOWN ACCORDINGLY

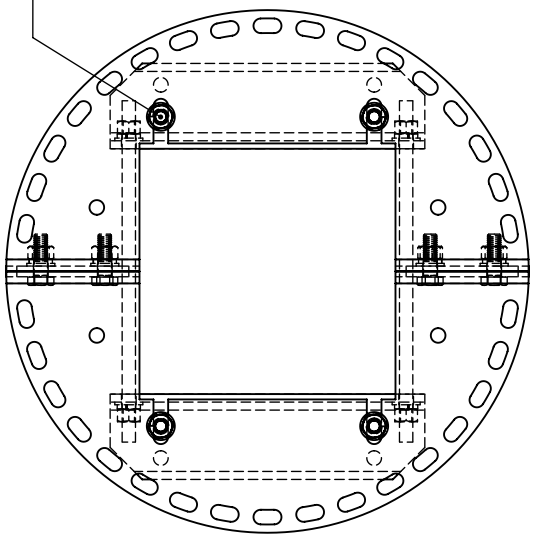

DETAIL D
BOLTING DETAIL
(HIDDEN LINES SHOWN)

STEP 4 INSTALLING TOP MAST BASE PLATE TO UPPER RING PLATES

Install the Top Mast Base Plate to the Upper Ring Plates using 5/8" X 2" Bolt Kits as shown below:

P597-452-01
(1) TOP MAST BASE PLATE

UPPER RING PLATES

HK1-1020-12
(4) 5/8" X 2" BOLT KIT

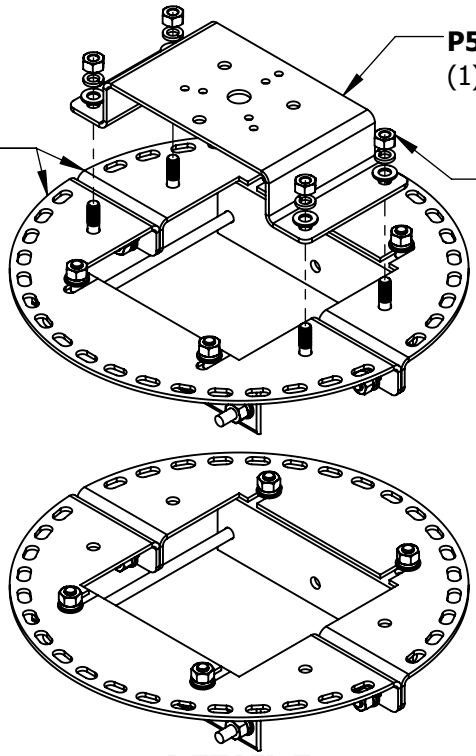

DETAIL E
BOLTING THE TOP POLE MOUNT KIT TO TOP MAST BASE PLATE

STEP 5 INSTALLING TOP POLE MOUNT KIT TO TOP MAST BASE PLATE

Depending on which Kit is onsite, installation image below may vary. See Page 8 to verify the Top Pole Mount Kit. For other Top Pole Mount Installations see Reference Pages 17-18.

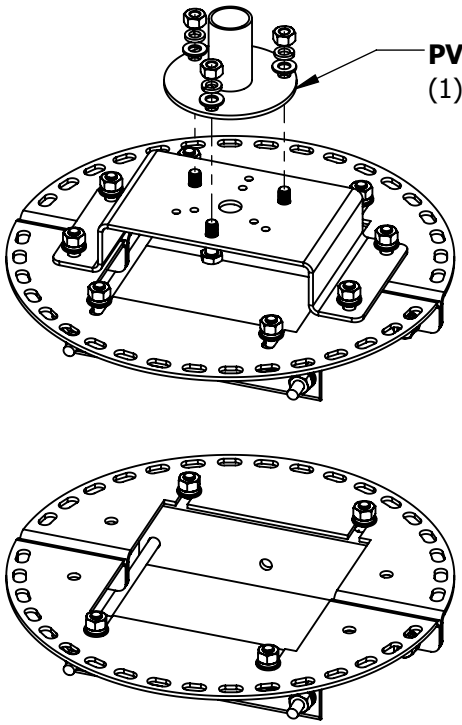

DETAIL F
BOLTING THE TOP POLE MOUNT KIT TO TOP MAST BASE PLATE

STEP 6 INSTALLING CLAMP KITS TO RING PLATES

See Page 7 to verify and install Clamp Kits to Ring Plates (at ground level if possible). Site conditions may vary and may require a different radial bolt pattern for installation.

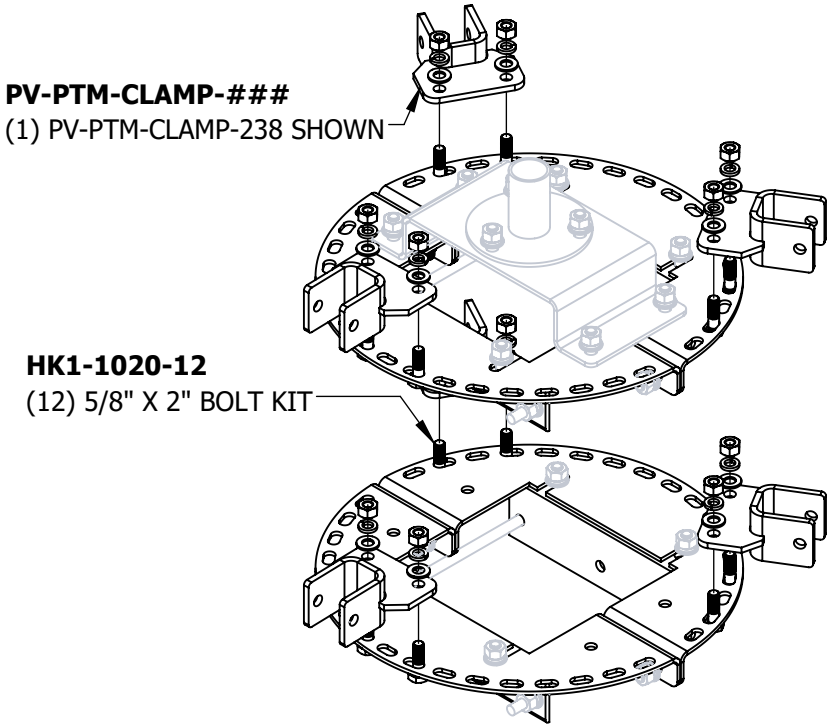

DETAIL G

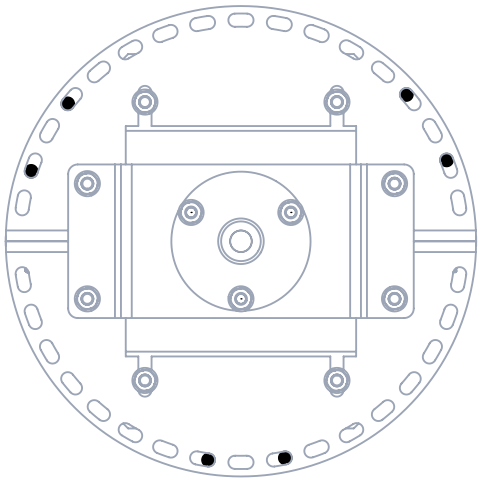

DETAIL H
GENERAL RADIAL BOLT PATTERN
(MAY VARY TO SATISFY SITE)

STEP 7 ATTACHING PIPES TO TOP POLE MOUNT

Using 5/8" X 4-1/2" Bolt Kits (Included with Clamp Kits), install Pipes to Clamp Kits (at ground level if possible) as shown below.
Nut Torque: 100 ft-lbs

If there are no Pipes onsite to mount disregard this step and see the next page to complete Mount installation

Pipes are recommended to be installed centered between Upper and Lower Ring Plates. Ring Plate spacing may vary depending on site requirements / conditions.

Based on required site conditions, Radial Pipe Placement may be different from the installation image below.

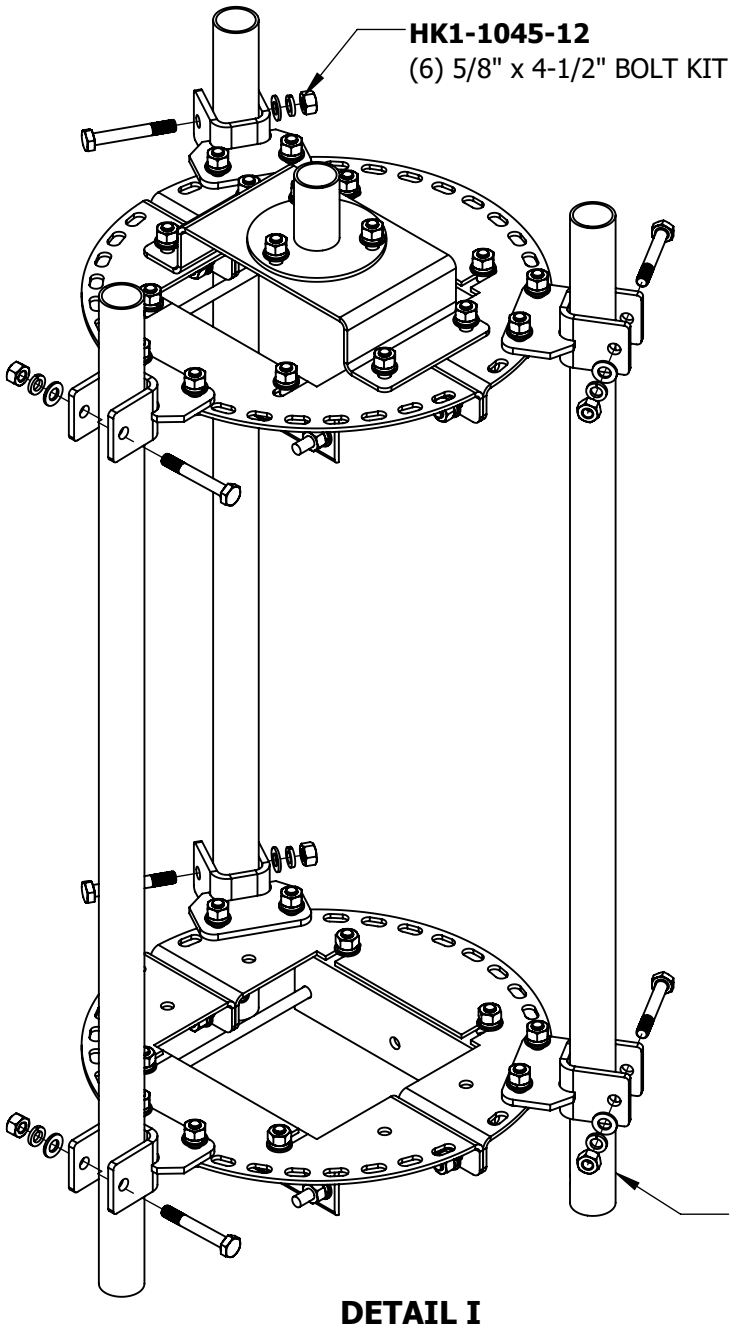

DETAIL I
BOLTING PIPES TO PIPE CLAMP KITS

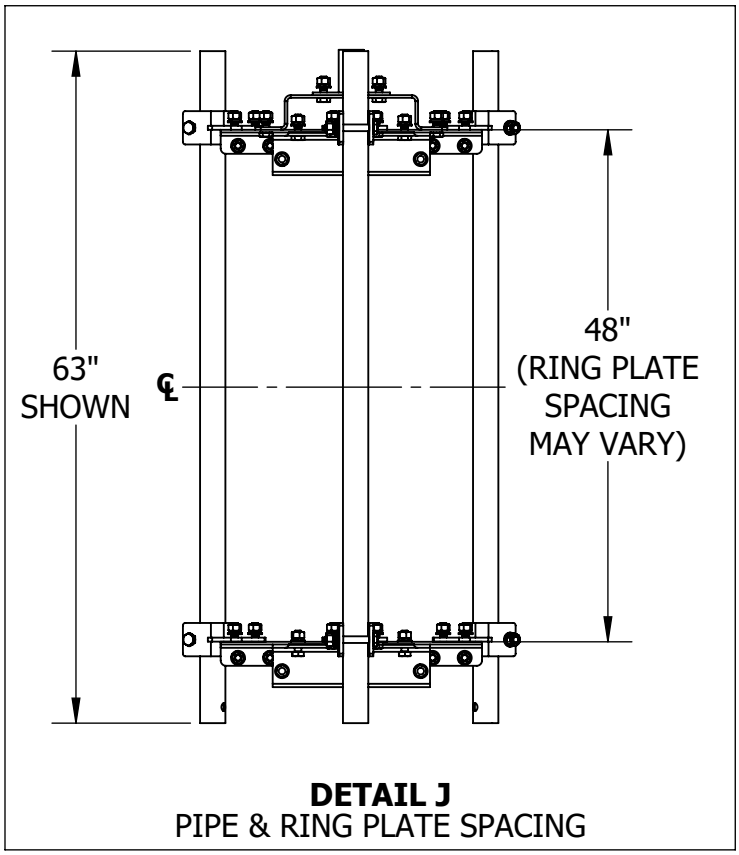

DETAIL J
PIPE & RING PLATE SPACING

STEP 8 INSTALLING AND ADJUSTING TOP MOUNT ON POLE

To complete installation, use necessary onsite equipment to hoist the Top Mount onto the existing Pole. Once the Top Mount is sitting on the existing Pole, adjust the mount so that the top of the Pole aligns flush with the Upper Ring Plates ±1/2" as shown below.

Once adjusted, fully tighten all hardware. Ensure Clamps are fully tightened on the Pole.

See Reference Page 21 for Alternative Pole Installation Option.

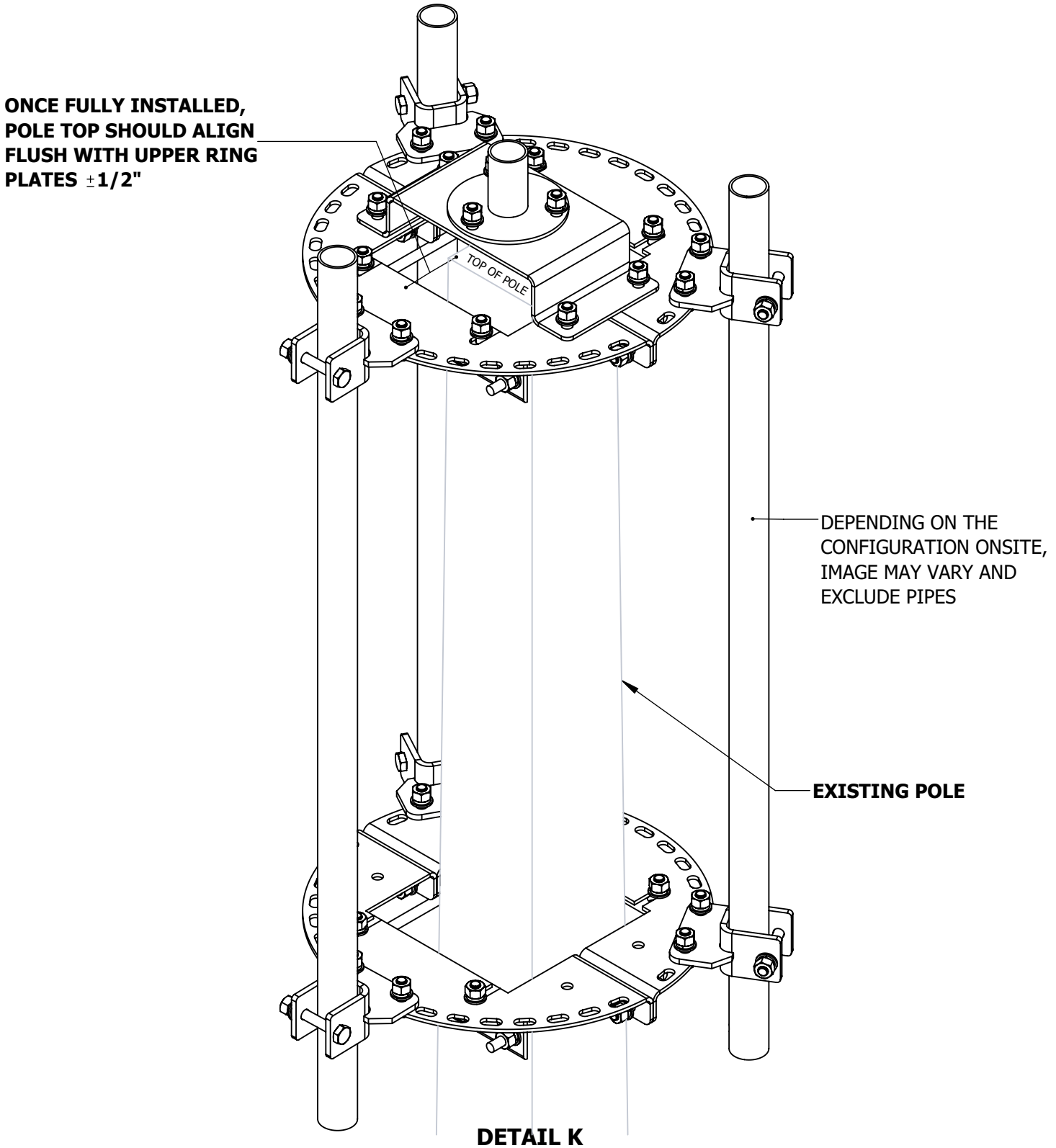

DETAIL K
INSTALLING AND ADJUSTING TOP MOUNT TO POLE

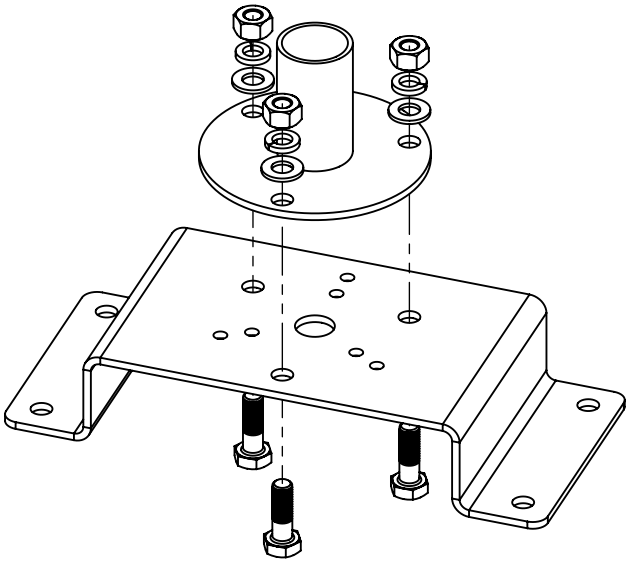

PV-PTM-TF-P238
FIXED 2-3/8" OD PIPE MOUNT

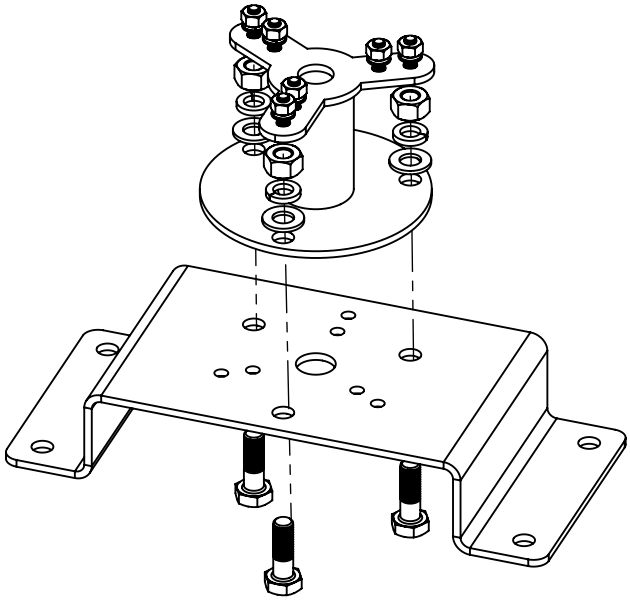

PV-PTM-TF-T3
FIXED TRI-BRACKET MOUNT

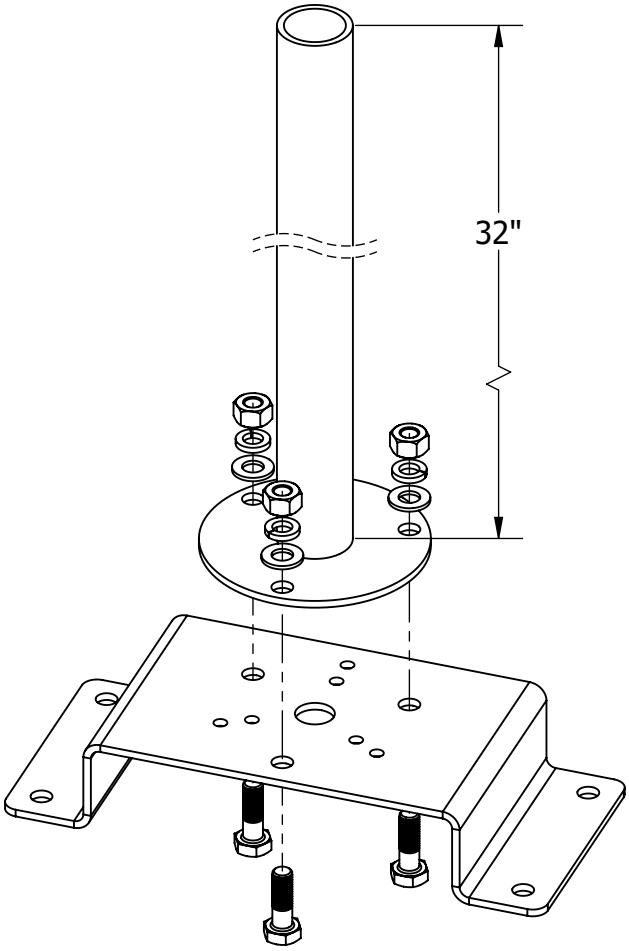

PV-PTM-TF-P238X30
FIXED 2-3/8" OD 30" PIPE MOUNT

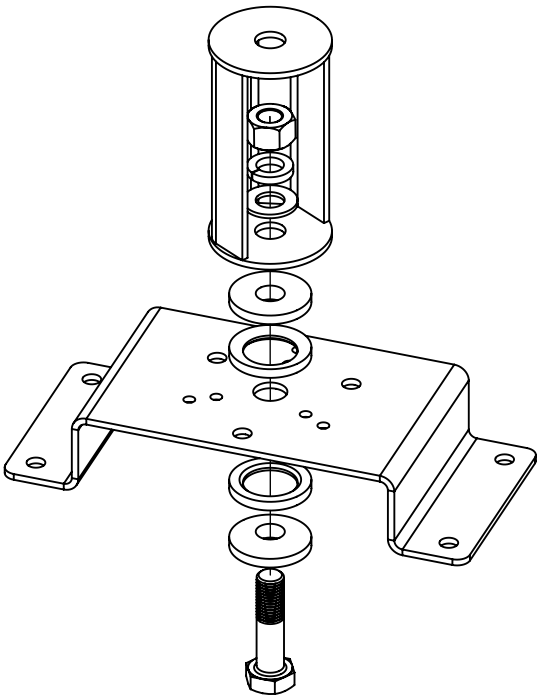

PV-PTM-TF-P238
FIXED 2-3/8" OD PIPE MOUNT

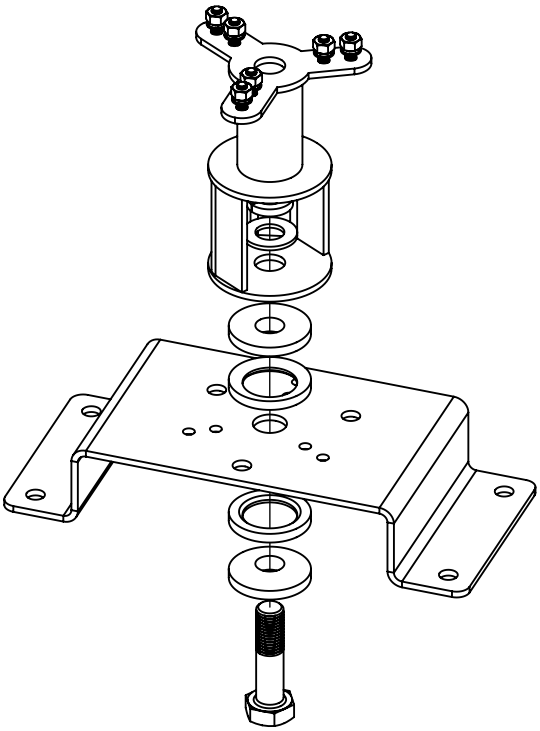

PV-PTM-TF-T3
FIXED TRI-BRACKET MOUNT

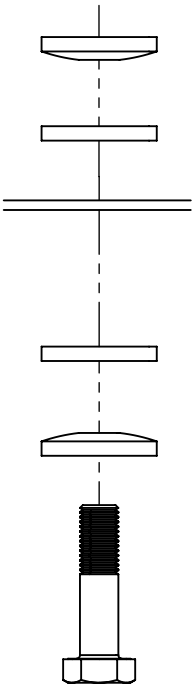

FRONT VIEW
CORRECT HW NESTING

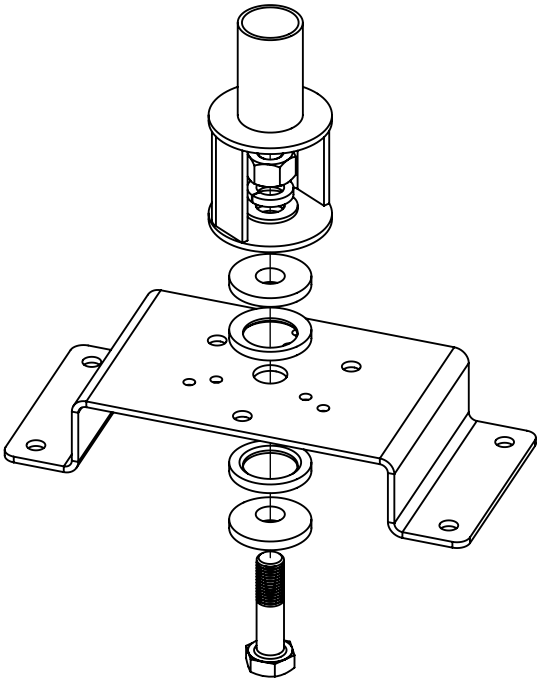

PV-PTM-TF-P238
FIXED 2-3/8" OD PIPE MOUNT

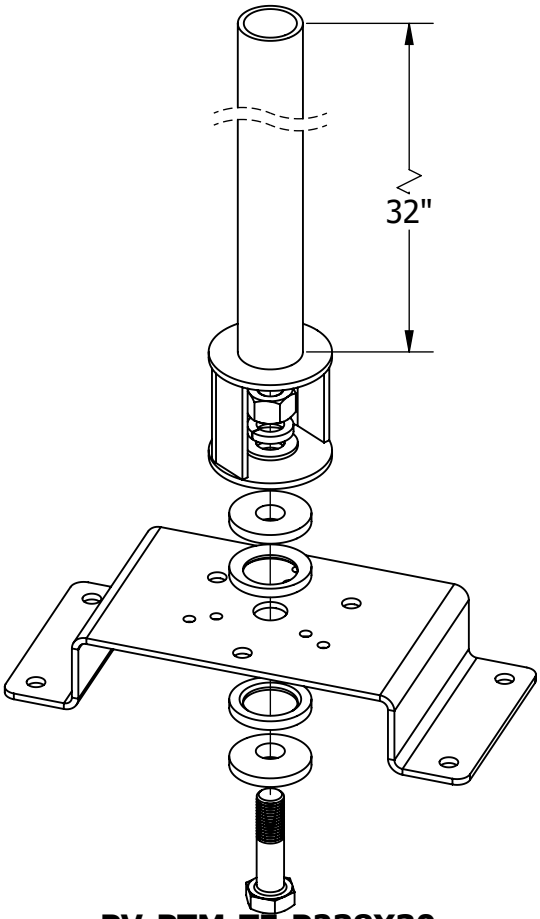

PV-PTM-TF-P238X30
FIXED 2-3/8" OD 30" PIPE MOUNT

ALTERNATIVE POLE TOP MOUNT INSTALLATION REFERENCE PAGE

If Site Specific Instructions require that the mount be directly mounted to the Pole (not using Clamping All Threads), it is possible to install the Mount directly to the Pole using Lag Bolts or a single set of All Threads.

First, Measure necessary Clamp Hole Spacing C-C and pre-drill ∅5/8" Holes on the Pole with the same C-C spacing. Then, using the Center Hole on the Clamps, use a Lag Bolt or All Thread to Clamp the Mount to the Pole directly.

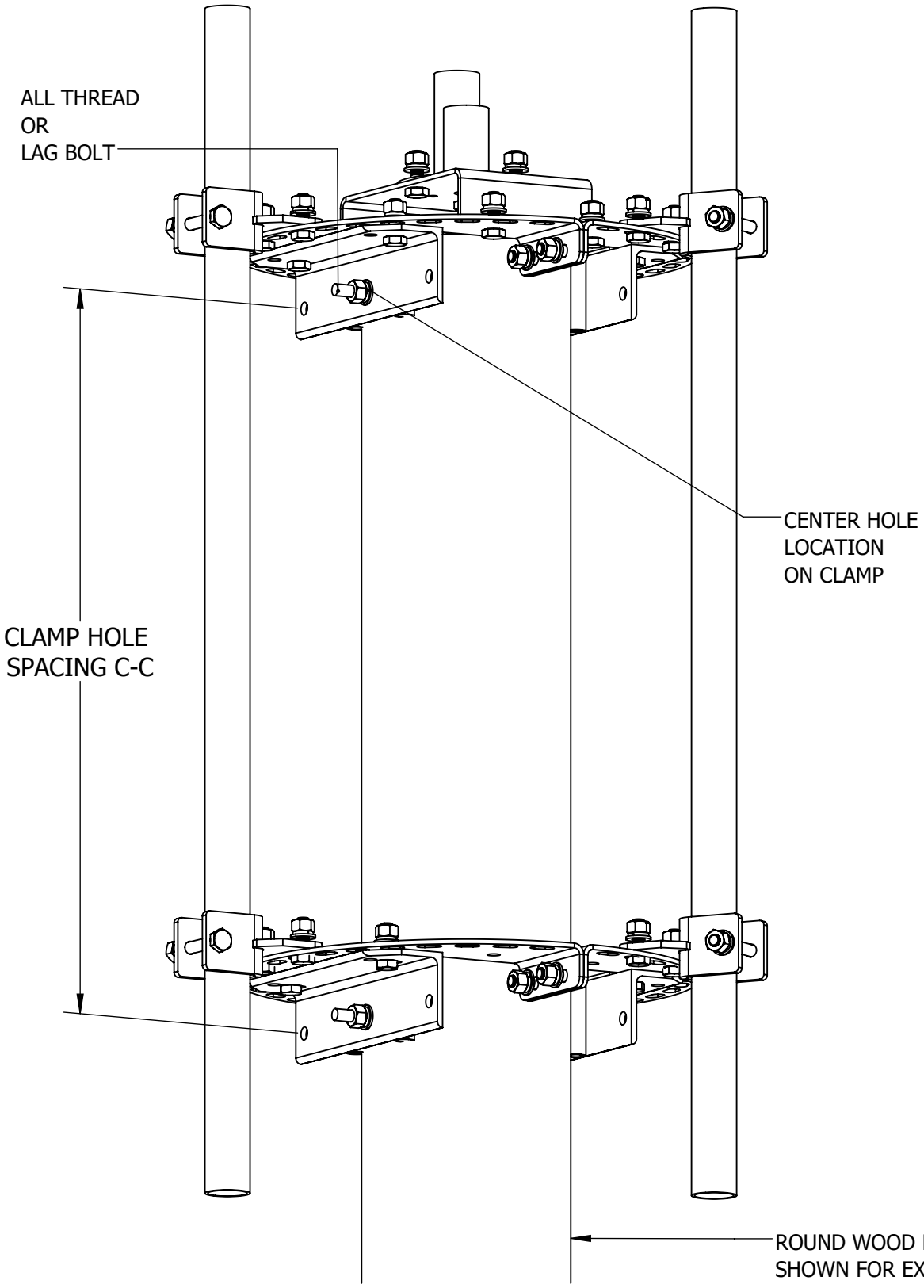

NOTES

NOTES

NOTES