www.alliedboltinc.com
P: 516-512-7600 **F:** 516-512-7611
July 31, 2026

PRODUCT DETAIL SHEET



1/4" X 3" COACH SCREW

#6000

- Used in outside plant construction for making attachments to telephone poles and other wood structures.
- Square head is 3/8".
- Formed from Grade 2 Steel.
- Lag Screws have a Rockwell Hardness ranging from B70-B100.
- Mechanically galvanized to meet ASTM Specification B695, Class 50, Type 1.
- Minimum tensile strength: 2,350 lbf.

POLELINE HARDWARE

PART #	DESCRIPTION	PACKAGE QTY.	CARTON QTY.	CARTON WT.
6000	1/4" X 3" COACH SCREW	100	4	15



Copyright © 2026 Allied Bolt Products, LLC. All rights reserved

PRODUCT DETAIL SHEET

1/4" X 3" COACH SCREW

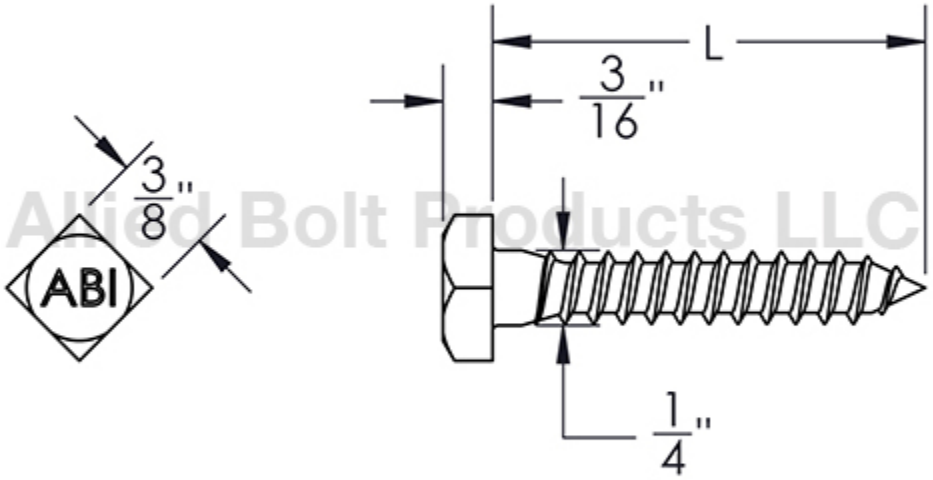

Allied Bolt Products LLC

Copyright © 2026 Allied Bolt Products, LLC. All rights reserved

PRODUCT DETAIL SHEET

1/4" X 3" COACH SCREW

GENERAL DISCLAIMER

THE INFORMATION CONTAINED ON THIS WEBSITE, INCLUDING, BUT NOT LIMITED TO, ILLUSTRATIONS, PHOTOGRAPHS, DIAGRAMS, SCHEMATICS, DIMENSIONS, AND SPECIFICATIONS, IS PROVIDED "AS IS" AND WITHOUT WARRANTY OF ANY KIND. CHANGES TO THE INFORMATION MAY BE MADE WITHOUT NOTICE AT ANY TIME. ANY USE OF THE INFORMATION IS AT THE USER'S OWN RISK. ALLIED BOLT PRODUCTS, LLC MAKES NO ASSURANCE THAT ITS PRODUCTS ARE SUITABLE FOR A PARTICULAR PURPOSE OR THAT USE OF ITS PRODUCTS WILL YIELD IDENTICAL RESULTS UNDER ALL CIRCUMSTANCES. CONTACT AN ALLIED BOLT PRODUCTS, LLC REPRESENTATIVE WITH SPECIFIC QUESTIONS OR FOR FURTHER INFORMATION CONCERNING ITS PRODUCTS.

DISCLAIMER OF WARRANTIES

YOU AGREE THAT YOU ARE USING THIS WEBSITE AT YOUR SOLE RISK ON AN "AS IS" AND "AS AVAILABLE" BASIS. ALLIED BOLT PRODUCTS, LLC MAKES NO REPRESENTATIONS OR WARRANTIES OF ANY KIND, EXPRESS OR IMPLIED, AS TO THE OPERATION OF THIS WEBSITE OR THE INFORMATION, CONTENT, MATERIALS, OR PRODUCTS INCLUDED ON THIS WEBSITE. TO THE FULLEST EXTENT PERMISSIBLE BY APPLICABLE LAW, ALLIED BOLT PRODUCTS, LLC DISCLAIMS ALL WARRANTIES, EXPRESS OR IMPLIED, INCLUDING, BUT NOT LIMITED TO, IMPLIED WARRANTIES OF MERCHANTABILITY, FITNESS FOR A PARTICULAR PURPOSE, AND NON-INFRINGEMENT. YOUR SOLE REMEDY FOR DISSATISFACTION WITH THE WEBSITE IS TO STOP USING THE WEBSITE AND/OR ANY RELATED SERVICES. ALLIED BOLT PRODUCTS, LLC DOES NOT WARRANT THAT THIS WEBSITE, ITS SERVERS, OR E-MAIL SENT FROM THE WEBSITE ARE FREE OF VIRUSES OR OTHER HARMFUL COMPONENTS. CERTAIN STATE LAWS DO NOT ALLOW LIMITATIONS ON IMPLIED WARRANTIES OR THE EXCLUSION OR LIMITATION OF CERTAIN DAMAGES. IF THESE LAWS APPLY TO YOU, SOME OR ALL OF THE ABOVE DISCLAIMERS, EXCLUSIONS, OR LIMITATIONS MAY NOT APPLY TO YOU, AND YOU MAY HAVE ADDITIONAL RIGHTS.

LIMITATION OF LIABILITY

NEITHER ALLIED BOLT PRODUCTS, LLC NOR ANY OF ITS EMPLOYEES, OFFICERS, DIRECTORS, AGENTS, VENDORS, OR SUPPLIERS SHALL UNDER ANY CIRCUMSTANCES OR UNDER ANY LEGAL OR EQUITABLE THEORY, WHETHER IN TORT, CONTRACT, STRICT LIABILITY OR OTHERWISE, BE LIABLE TO YOU OR TO ANY OTHER PERSON FOR ANY INDIRECT, SPECIAL, INCIDENTAL OR CONSEQUENTIAL LOSSES OR DAMAGES OF ANY NATURE ARISING OUT OF OR IN CONNECTION WITH THE USE OF OR INABILITY TO USE THE WEBSITE, INCLUDING, WITHOUT LIMITATION, DAMAGES FOR LOST PROFITS, LOSS OF GOODWILL, LOSS OF DATA, WORK STOPPAGE, ACCURACY OF RESULTS, OR COMPUTER FAILURE OR MALFUNCTION, WHETHER OR NOT ALLIED BOLT PRODUCTS, LLC IS ADVISED OF THE POSSIBILITY OF SUCH DAMAGES. THE FOREGOING LIMITATION OF LIABILITY SHALL APPLY TO THE FULLEST EXTENT PERMITTED BY LAW IN THE APPLICABLE JURISDICTION.

Copyright © 2026 Allied Bolt Products, LLC. All rights reserved