App No: 2018100518

Revised 10.30.18 - JR

Applicant Name	Wireless Communication Consultants, Inc.			Antenna Compliance	Yes
Application Type	Minor Modificatio	Updated	10/9/2018	Compliance Desc	
Carrier	Sprint/Nextel	6409?	No	Antenna Location	No
				Antenna Loc. Desc.	
Solution Type	Macro	Ann. Plan?	Yes	Env. Assessment	
Existing	Existing	Equipment Gvt Us	No	Cat. Excluded?	checked
		Gvt. Use Desc.		Routine Env. Evaluation	

Application Description

Sprint is modifying (removing and adding upgraded Sprint equipment) the existing Fort Worth Tower. Sprint would like to remove six (6) existing Sprint antennas and relocate three (3) existing RRHs form the ground to the tower. Sprint would like to add six (6) new antennas and 15 RRHs (three of which are being relocated from the ground to the tower).

Site Id	203		
Structure Type	Tower	Zoning	R-C
Address	0 Ashton Rd.	Latitude	39.1608333
County Site Name	PEPCO #163-S	Longitude	-76.9838888
Carrier Site Name	PEPCO TOWER 163S	Ground Elevation	417
Site Owner	PEPCO	City	Ashton
		Lease Status	N/A
Structure Owner	PEPCO (Pepco Electrical Power Com	PROW	Yes
Structure Height	132'		

Justification

Sprint is modifying (removing and adding upgraded Sprint equipment) the existing Fort Worth Tower .

NearbySites (New Apps Only):

Screeningconsiderations(New Apps Only):

Wednesday, October 10, 2018

11:11:33 AM

App No: 2018100518

Antenna Model	APXVTM14-ALU-120
Frequency	See attached RF frequency chart

RAD Center	142	Max ERP	240	Antenna Dimensions	71.9''x13.8''x8.2''	Quantity	3

Wednesday, October 10, 2018

11:11:33 AM

App No: 2018100518

Antenna Model	APXVBBLL15X_43-C-120						
Frequency	See attached RF frequency chart						
RAD Center	142	Max ERP	300	Antenna Dimensions	66.7''x19.6''x8.5''	Quantity	3

Wednesday, October 10, 2018

11:11:33 AM

Montgomery County Zoning

Date: 10/29/2018

Montgomery County
Planning Department
ITI Division

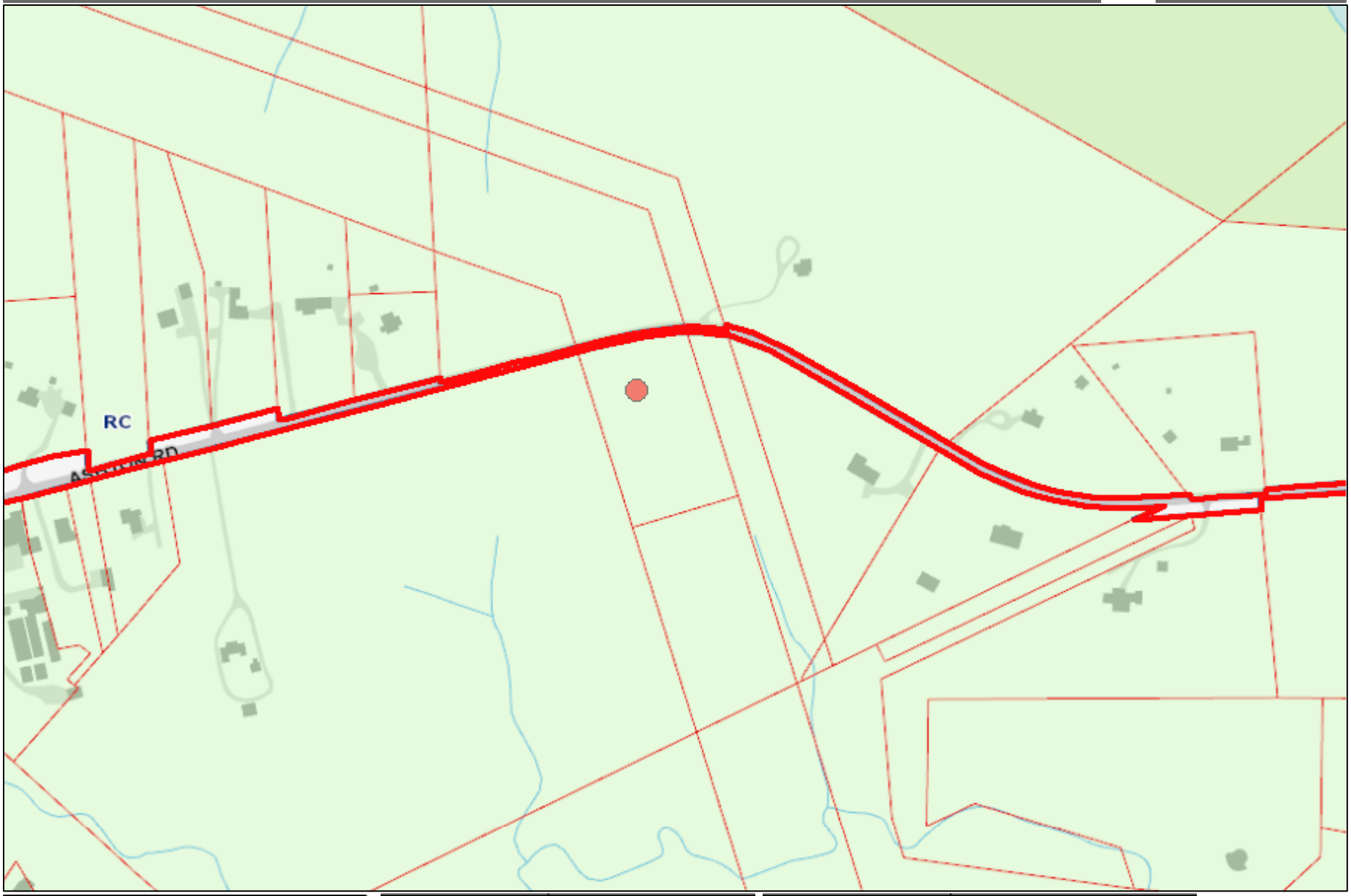

Account #	00716671
Address	0 ASHTON RD
Zone	RC
Overlay Zone	N/A
TDR Overlay Zone	N/A
Landuse	Utility
Parcel, Lot, Block	P335 , N/A , N/A
WSSC Grid	225NE02
Map Amendments	G-256 G-266 G-770 G-956

Parking District	N/A
CBD	N/A
Special Protection Area	N/A
Urban District	N/A
Enterprise Zone	N/A
Arts & Ent. District	N/A
Special Tax District	N/A
Legal Description	SNOWDENS MANOR

Bike/Ped Priority Area	N/A
Urban Renewal Area	N/A
Metro Station Policy Area	N/A
Priority Funding Area	N/A
Septic Tier	Tier 4: Conservation Area
Municipality	N/A
Master Plan	SANDY SPRING ASHTON
Historic Site/District	N/A
Water/Sewer Categories	N/A

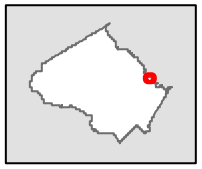

1 inch = 407 feet

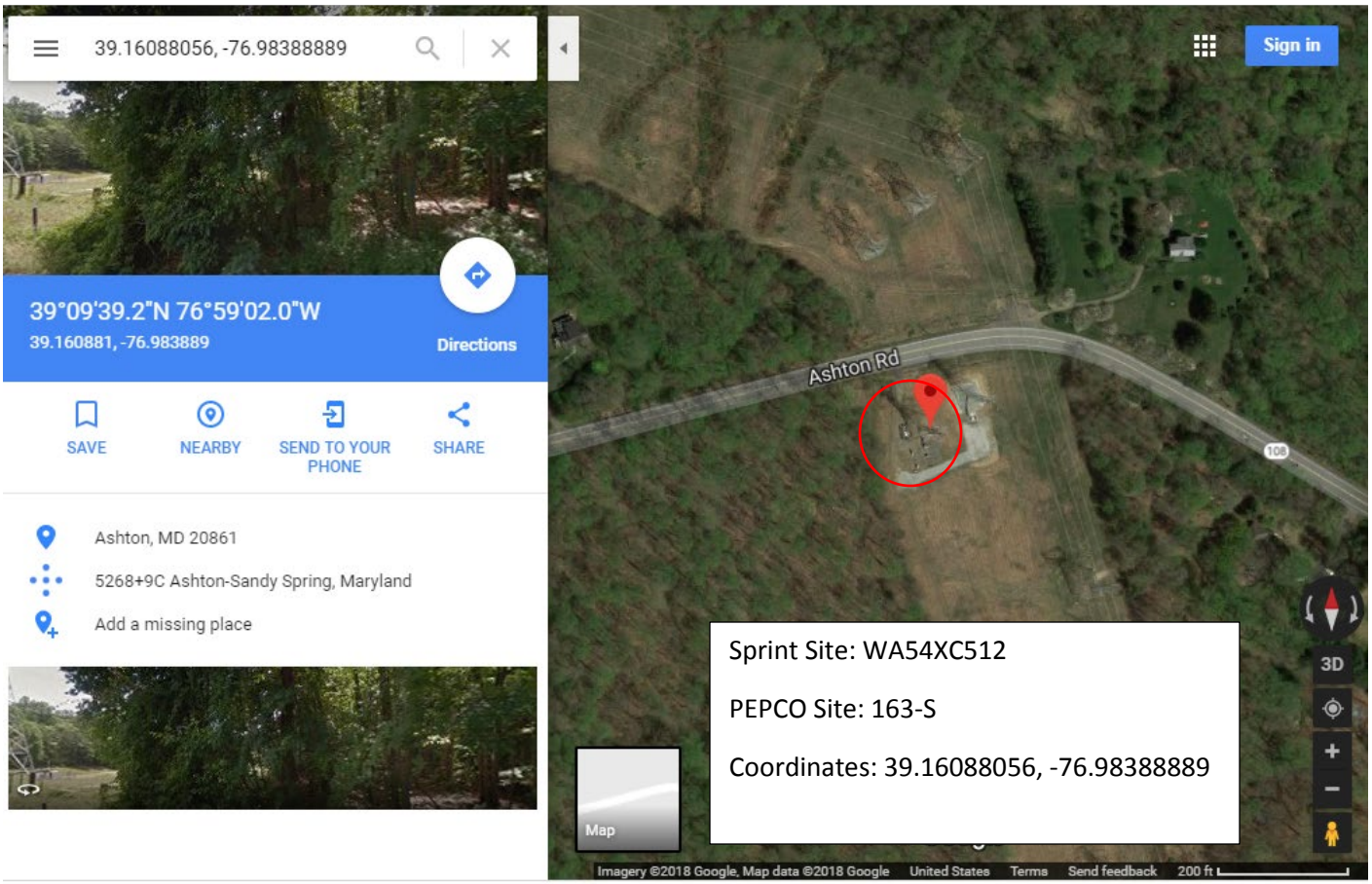
39.16088056, -76.98388889
39°09'39.2"N 76°59'02.0"W
39.160881, -76.983889
Directions
SAVE
NEARBY
SEND TO YOUR PHONE
SHARE
Ashton, MD 20861
5268+9C Ashton-Sandy Spring, Maryland
Add a missing place
Sign in
Ashton Rd
108
3D
Map
Sprint Site: WA54XC512
PEPCO Site: 163-S
Coordinates: 39.16088056, -76.98388889
Imagery ©2018 Google, Map data ©2018 Google
United States
Terms
Send feedback
200 ft

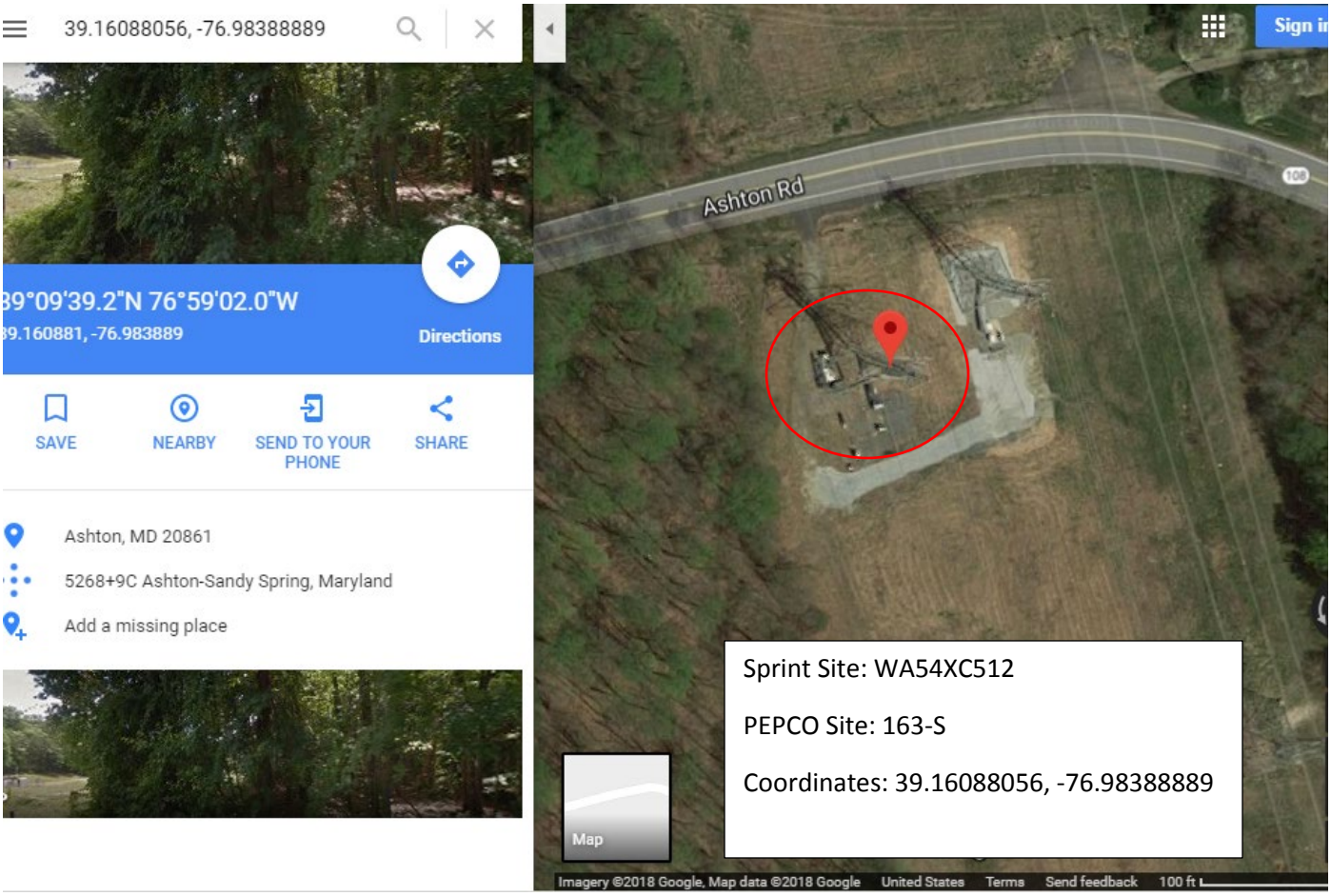
39.16088056, -76.98388889
39°09'39.2"N 76°59'02.0"W
39.160881, -76.983889
Directions
SAVE
NEARBY
SEND TO YOUR PHONE
SHARE
Ashton, MD 20861
5268+9C Ashton-Sandy Spring, Maryland
Add a missing place
Ashton Rd
108
Sign in
Map
Imagery ©2018 Google, Map data ©2018 Google
United States
Terms
Send feedback
100 ft
Sprint Site: WA54XC512
PEPCO Site: 163-S
Coordinates: 39.16088056, -76.98388889

RADIO FREQUENCY SYSTEMS
The Clear Choice®

RF X-TREME™ 8-port Antenna, 1.5m, 694-960/694-960/1695-2690/1695-2690MHz, 65deg, 14.7/14.8/19.3/19.1dBi, VET, 2-12°/2-12°/2-12°/2-12°

FEATURES / BENEFITS

This antenna provides an 8-port multi-band flexible platform for advanced use in both low and high bands

- **4 ports / 2 systems in low band**
- **4 ports / 2 systems in high band**
- **Integrated RET platform**
- **Slim radome design**
- **MIMO 4x4 for LTE 700 & 2600**

Technical Features

LOW BAND LEFT ARRAY (694-960 MHZ) [R1]

Frequency Band	MHz	694-790	790-894	880-960
Gain	dBi	13.6	14.6	14.7
Horizontal Beamwidth @3dB	Deg	69.3 +/- 9.5	61.8 +/- 5.3	58.2 +/- 2.9
Vertical Beamwidth @3dB	Deg	16.1 +/- 1.7	14 +/- 1.1	12.7 +/- 0.6
Front-to-Back, at +/-30°, Total Power	dB	17.4	21.6	23
First Upper Side Lobe Suppression	dB	15.4	17.3	16.3
Electrical Downtilt Range	Deg	2 to 12		
3rd Order PIM 2 x 43dBm	dBc	-153		
VSWR	-	1.5		
Return Loss	dB	14		
Cross Polar Isolation	dB	25		
Inter Band Isolation	dB	R1//R2 Typical 26 R1//Y1 Typical 25 R1//Y2 Typical 35		
Maximum Effective Power per Port	Watt	300		

LOW BAND RIGHT ARRAY (694-960 MHZ) [R2]

Frequency Band	MHz	694-790	790-894	880-960
Gain	dBi	13.9	14.7	14.8
Horizontal Beamwidth @3dB	Deg	69.9 +/- 10.2	62.5 +/- 5.7	58.7 +/- 3.1
Vertical Beamwidth @3dB	Deg	16 +/- 1.7	13.9 +/- 1.1	12.7 +/- 0.6
Front-to-Back, at +/-30°, Total Power	dB	17.3	20.9	24.3
First Upper Side Lobe Suppression	dB	17	17.4	16.5
Electrical Downtilt Range	Deg	2 to 12		
3rd Order PIM 2 x 43dBm	dBc	-153		
VSWR	-	1.5		
Return Loss	dB	14		
Cross Polar Isolation	dB	25		
Inter Band Isolation	dB	R2//R1 Typical 26 R2//Y1 Typical 35 R2//Y2 Typical 25		
Maximum Effective Power per Port	Watt	300		

All information contained in the present datasheet is subject to confirmation at time of ordering

RADIO FREQUENCY SYSTEMS
The Clear Choice®

RF X-TREME™ 8-port Antenna, 1.5m, 694-960/694-960/1695-2690/1695-2690MHz, 65deg, 14.7/14.8/19.3/19.1dBi, VET, 2-12°/2-12°/2-12°/2-12°

HIGH BAND LEFT ARRAY (1695-2690 MHZ) [Y1]

Frequency Band	MHz	1695-1880	1850-2010	1900-2170	2300-2500	2500-2690
Gain	dBi	17.9	18.1	18.3	18.6	19.3
Horizontal Beamwidth @3dB	Deg	63.7 +/- 10	58.3 +/- 3	59.7 +/- 4.7	61.2 +/- 3.7	54 +/- 5.6
Vertical Beamwidth @3dB	Deg	6.4 +/- 0.2	6 +/- 0.5	5.7 +/- 0.5	4.9 +/- 0.4	4.5 +/- 0.3
Front-to-Back, at +/-30°, Total Power	dB	24.2	25.2	25.8	24.6	24.5
First Upper Side Lobe Suppression	dB	15.9	15.1	13.9	14.8	11.5
Electrical Downtilt Range	Deg	2 to 12				
3rd Order PIM 2 x 43dBm	dBc	-153				
VSWR	-	1.5				
Return Loss	dB	14				
Cross Polar Isolation	dB	25				
Inter Band Isolation	dB	Y1//R1 Typical 25 Y1//R2 Typical 35 Y1//Y2 Typical 33				
Maximum Effective Power per Port	Watt	300				

HIGH BAND RIGHT ARRAY (1695-2690 MHZ) [Y2]

Frequency Band	MHz	1695-1880	1850-2010	1900-2170	2300-2500	2500-2690
Gain	dBi	17.7	17.8	18.2	18.3	19.1
Horizontal Beamwidth @3dB	Deg	63.9 +/- 8.5	59.2 +/- 3.2	59.9 +/- 4.5	60 +/- 4.2	53.4 +/- 4.1
Vertical Beamwidth @3dB	Deg	6.4 +/- 0.3	6 +/- 0.5	5.7 +/- 0.5	4.8 +/- 0.4	4.4 +/- 0.3
Front-to-Back, at +/-30°, Total Power	dB	23.4	24.3	26.1	25.7	25.6
First Upper Side Lobe Suppression	dB	15.3	14.8	13.7	16.1	15.6
Electrical Downtilt Range	Deg	2 to 12				
3rd Order PIM 2 x 43dBm	dBc	-153				
VSWR	-	1.5				
Return Loss	dB	14				
Cross Polar Isolation	dB	25				
Inter Band Isolation	dB	Y2//R1 Typical 35 Y2//R2 Typical 25 Y2//Y1 Typical 33				
Maximum Effective Power per Port	Watt	300				

All information contained in the present datasheet is subject to confirmation at time of ordering

RADIO FREQUENCY SYSTEMS
The Clear Choice®

RF X-TREME™ 8-port Antenna, 1.5m, 694-960/694-960/1695-2690/1695-2690MHz, 65deg, 14.7/14.8/19.3/19.1dBi, VET, 2-12°/2-12°/2-12°/2-12°

ELECTRICAL SPECIFICATIONS

Impedance	Ohm	50.0
Polarization	Deg	±45°

MECHANICAL SPECIFICATIONS

Dimensions - H x W x D	mm (in)	1694 x 499 x 215 (66.7 x 19.6 x 8.5)
Weight (Antenna Only)	kg (lb)	34 (75)
Weight (Mounting Hardware only)	kg (lb)	3.4 (7.5)
Packing size- HxWxD	mm (in)	1830 x 560 x 411 (72 x 22 x 16.2)
Shipping Weight	kg (lb)	43.4 (95.7)
Connector type		8 x 4.3-10 female at bottom + 2 AISG connectors (1 male, 1 female)
Adjustment mechanism		M RET solution AISG 2.0
Mounting Hardware Material		Diecast Aluminium and Galvanized steel
Radome Material / Color		Fiber Glass / Light Grey RAL7035

TESTING AND ENVIRONMENTAL

Temperature Range	°C (°F)	-40 to 60 (-40 to 140)
Lightning protection		IEC 61000-4-5
Survival/Rated Wind Velocity	km/h	240 (150)
Wind Load @Rated Wind Front	N	564.0
Wind Load @Rated Wind Side	N	275.0
Wind Load @Rated Wind Rear	N	723.0
Environmental		ETSI 300-019-2-4 Class 4.1E

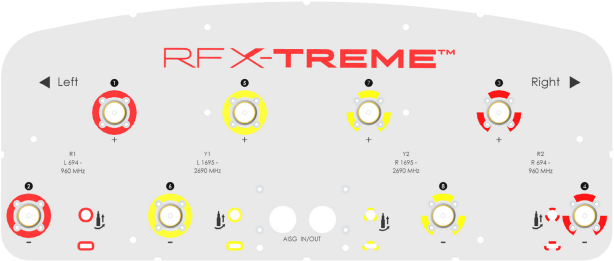

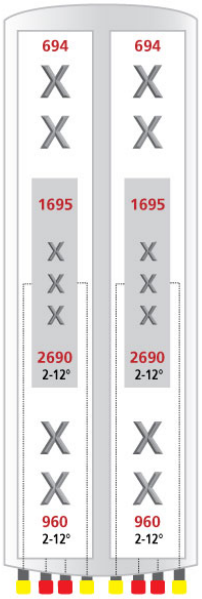

Antenna Array

All information contained in the present datasheet is subject to confirmation at time of ordering

RADIO FREQUENCY SYSTEMS
The Clear Choice®

RF X-TREME™ 8-port Antenna, 1.5m, 694-960/694-960/1695-2690/1695-2690MHz, 65deg, 14.7/14.8/19.3/19.1dBi, VET, 2-12°/2-12°/2-12°/2-12°

ORDERING INFORMATION

Order No.	Configuration	Mounting Hardware	Mounting pipe Diameter	Weight
APXVBBLL15X_43-C	Manual tilt control	APM40-2 Beam tilt kit	60-120mm	35.7 Kg
APXVBBLL15X_43-C-I20	Internal RET included	APM40-2 Beam tilt kit	60-120mm	37.4 kg

External Document Links

APM40_Series_Installation_Instructions
Manual_Overdrive_Instructions
Global RFS Website

Notes

NOTE1: All electrical parameters are compliant with BASTA NGMN 9.6 requirements.
NOTE2: RET upgrade is not available for APXVBBLL15X_43-C. Please order the APXVBBLL15X_43-C-I20.

Available Configurations

- APXVBBLL15X_43-C - No RET included - weight 35.7 Kg
- APXVBBLL15X_43-C-I20 - M RET included - weight 37.4 Kg

For additional mounting information please click "External Document Links".

*This data is provisional and subject to changes

External Link Reference

Global RFS Website	http://www.rfsworld.com

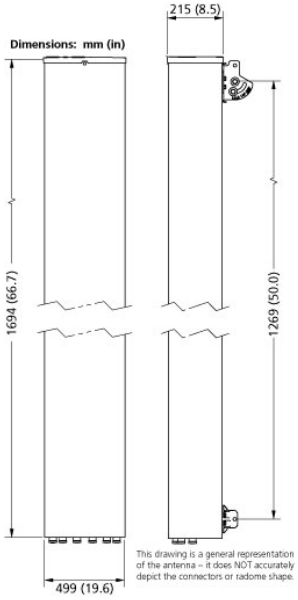

All information contained in the present datasheet is subject to confirmation at time of ordering

Product Data Sheet APXVTM14-ALU-I20

TD-LTE Cross Polarized Antenna, 2490-2690, 1.4m, 0-6 deg EDT

Product Description

This antenna is an ideal choice for complex sites with the TD-LTE band.

Features/Benefits

- **Effective polarization diversity ensured by high cross polar discrimination**
- **Wind load thrust highly reduced**
- **Variable electrical downtilt 0-6 degrees**
- **AISG 2.0**
- **Integrated RET motor, AISG 2.0**

Technical Specifications

Electrical Specifications

Frequency Range, MHz	2490-2600, 2600-2690
Polarization	Dual Pol +/-45°
Electrical downtilt range, degrees	0-6
Calibration and Electrical Parameter	
Transmission from antenna ports to cal. port, dB	-26 ±2
Amplitude diff. between antenna port and cal. port, dB	< 0.7
Phase diff. between antenna port and cal. port, degrees	< 5
Same polarization ISO, dB (typical)	> 25
Different polarization ISO, dB	> 28
Unit Beam	
Horizontal Beamwidth, degrees	68 ±5, 62 ±5
Gain, dBi	18.0
Cross-polar ratio on main axis, dB	≥ 15
Cross-polar ratio @ ±60°, dB	≥ 10
Front-to-back ratio, dBi	≥ 25
Broadcast Beam	
Horizontal Beamwidth, degrees	65 ±5
Gain, dBi	18
Vertical Beamwidth, degrees	5.0
Cross-polar ratio on main axis, dB	≥ 15
Cross-polar ratio @ ±60°, dB	≥ 10
Front-to-back ratio, dB	≥ 28
Upper sidelobe suppression, dB	≤ -16
Service Beam	
Gain @ 0°, dB	23.5
Horizontal Beamwidth@ 0°, degrees	20
Side lobe suppression@ 0° on H-pattern, dB	≤ -12
Gain@±30°, dBi	≥ 21.5
Horizontal Beamwidth@ ±30°, degrees	≤ 23
Side lobe suppression @ 30° on H-pattern, dB	≤ -6
Cross-polar ratio on main axis, dB	≥ 22
Front-to-back ratio @ 0°, dB	≥ 30

Mechanical Specifications

Dimensions-HxWxD, mm	1430 x 320 x 160
Connector Type	(8) 4.1/9.5 DIN Female (1) NF – Calibration Port
Impedance,Ohms	50
Maximum Power Input, W	50
Lightning Protection	Direct Ground
Weight w/o Mtg Hardware, kg	25.5
Survival Wind Speed, km/h	240
Rated Wind Speed, km/h	160
Max Wind Loading Area, m²	0.55
Radome Material	ASA
Radome Color	Light Grey RAL7035
Mounting Hardware Material	Aluminum
Shipping Weight, kg	32
Packing Dimensions, HxWxD, mm	1550 x 440 x 200

Ordering Information

Mounting Hardware	Included
Mounting Pipe Diameter, mm	50-114
Mounting Hardware Weight, kg	5.2

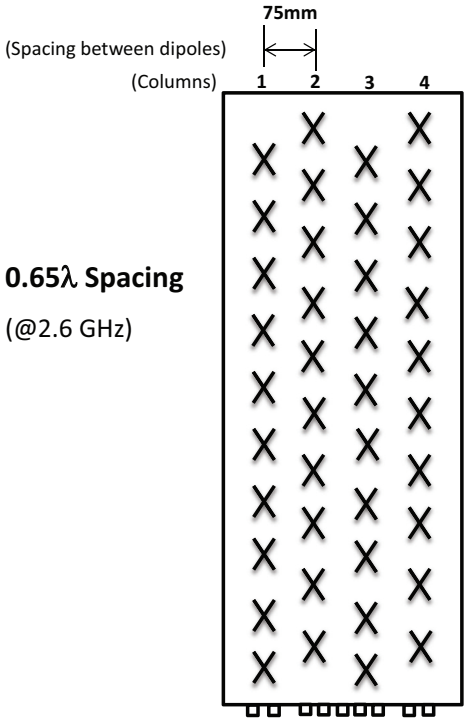

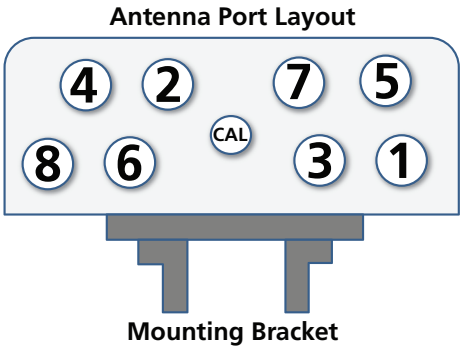

* This data is provisional and subject to change.

All information contained in the present datasheet is subject to confirmation at time of ordering.

Antenna Model	SprintVision RFDS Channel	Tx: Start Frequency MHz	Tx: Center Frequency	Tx: Stop Frequency MHz	Rx: Start Frequency MHz	Rx: Center Frequency	Rx: Stop Frequency MHz
APXVSPP18-C-A20 (dual band) APXVBBLL15_43-C-I20 (triband)	476	862.275	862.9	863.525	817.275	817.9	818.525
	8763	863.8	866.3	868.8	818.8	821.3	823.8
	25	1930.625	1931.25	1931.875	1850.625	1851.25	1851.875
	50	1931.875	1932.5	1933.125	1851.875	1852.5	1853.125
	75	1933.125	1933.75	1934.375	1853.125	1853.75	1854.375
	8140	1935	1940	1945	1855	1860	1865
	8665	1990	1992.5	1995	1910	1912.5	1915
APXV9TM14-C-I20 APXV9TM-ALU-I20 APXVTM14-ALU-I20 AAHC-MMA	L06	2618.9	2628.8	2637.8	2618.9	2628.8	2637.8
	L07	2638.7	2648.6	2658.5	2638.7	2648.6	2658.5
	L08	2659.4	2668.4	2677.4	2659.4	2668.4	2677.4

SITE NAME: PEPCO TOWER 163S

SITE NUMBER: WA54XC512

0 ASHTON ROAD

ASHTON, MD 20861

(A/K/A : 1300 ASHTON ROAD ASHTON, MD 20861)

MIMO UPGRADE PROJECT

Sprint

6391 SPRINT PARKWAY
OVERLAND PARK, KANSAS 66251
800-400-6040

entrex
communication services, inc.

6600 Rockledge Drive, Suite 550
Bethesda, MD 20817
Phone: (202)408-0960
Fax: (202)408-0961

SUBMITTALS

DATE	DESCRIPTION	REV.
10-09-18	CONSTRUCTION REVIEW	
10-29-18	CONSTRUCTION REVIEW	

SEAL:

GENERAL NOTES

1. THE CONTRACTOR SHALL GIVE ALL NOTICES AND COMPLY WITH ALL LAWS, ORDINANCES, RULES, REGULATIONS AND LAWFUL ORDERS OF ANY PUBLIC AUTHORITY, MUNICIPAL AND UTILITY COMPANY SPECIFICATIONS, AND LOCAL AND STATE JURISDICTIONAL CODES BEARING ON THE PERFORMANCE OF THE WORK. THE WORK PERFORMED ON THE PROJECT AND THE MATERIALS INSTALLED SHALL BE IN STRICT ACCORDANCE WITH ALL APPLICABLE CODES, REGULATIONS AND ORDINANCES.
2. THE ARCHITECT/ENGINEER HAS MADE EVERY EFFORT TO SET FORTH IN THE CONSTRUCTION AND CONTRACT DOCUMENTS THE COMPLETE SCOPE OF WORK. THE CONTRACTOR BIDDING THE JOB IS NEVERTHELESS CAUTIONED THAT MINOR OMISSIONS OR ERRORS IN THE DRAWINGS AND OR SPECIFICATIONS SHALL NOT EXCUSE SAID CONTRACTOR FROM COMPLETING THE PROJECT AND IMPROVEMENTS IN ACCORDANCE WITH THE INTENT OF THESE DOCUMENTS.
3. THE CONTRACTOR OR BIDDER SHALL BEAR THE RESPONSIBILITY OF NOTIFYING (IN WRITING) THE CONSTRUCTION MANAGER OF ANY CONFLICTS, ERRORS, OR OMISSIONS PRIOR TO THE SUBMISSION OF CONTRACTOR'S PROPOSAL OR PERFORMANCE OF WORK. IN THE EVENT OF DISCREPANCIES THE CONTRACTOR SHALL PRICE THE MORE COSTLY OR EXTENSIVE WORK, UNLESS DIRECTED IN WRITING OTHERWISE.
4. THE SCOPE OF WORK SHALL INCLUDE FURNISHING ALL MATERIALS, EQUIPMENT, LABOR AND ALL OTHER MATERIALS AND LABOR DEEMED NECESSARY TO COMPLETE THE WORK/PROJECT AS DESCRIBED HEREIN.
5. THE CONTRACTOR SHALL VISIT THE JOB SITE PRIOR TO THE SUBMISSION OF BIDS OR PERFORMING WORK TO FAMILIARIZE HIMSELF WITH THE FIELD CONDITIONS AND TO VERIFY THAT THE PROJECT CAN BE CONSTRUCTED IN ACCORDANCE WITH THE CONTRACT DOCUMENTS.
6. THE CONTRACTOR SHALL OBTAIN AUTHORIZATION TO PROCEED WITH CONSTRUCTION PRIOR TO STARTING WORK ON ANY ITEM NOT CLEARLY DEFINED BY THE CONSTRUCTION DRAWING/CONTRACT DOCUMENTS.
7. THE CONTRACTOR SHALL INSTALL ALL EQUIPMENT AND MATERIALS ACCORDING TO THE MANUFACTURER'S/VENDOR'S SPECIFICATION UNLESS NOTED OTHERWISE OR WHERE LOCAL CODES OR ORDINANCES TAKE PRECEDENCE.
8. THE CONTRACTOR SHALL PROVIDE A FULL SET OF CONSTRUCTION DOCUMENTS AT THE SITE UPDATED WITH THE LATEST REVISIONS AND ADDENDA OR CLARIFICATIONS AVAILABLE FOR THE USE BY ALL PERSONNEL INVOLVED WITH THE PROJECT.
9. THE CONTRACTOR SHALL SUPERVISE AND DIRECT THE PROJECT DESCRIBED HEREIN. THE CONTRACTOR SHALL BE SOLELY RESPONSIBLE FOR ALL CONSTRUCTION MEANS, METHODS, TECHNIQUES, SEQUENCES AND PROCEDURES AND FOR COORDINATING ALL PORTIONS OF THE WORK UNDER THE CONTRACT.
10. THE CONTRACTOR SHALL BE RESPONSIBLE FOR OBTAINING ALL PERMITS AND INSPECTIONS WHICH MAY BE REQUIRED FOR THE BY THE ARCHITECT/ENGINEER, THE STATE, COUNTY OR LOCAL GOVERNMENT AUTHORITY.
11. THE CONTRACTOR SHALL MAKE NECESSARY PROVISIONS TO PROTECT EXISTING IMPROVEMENTS, EASEMENTS, PAVING, CURBING, ETC. DURING CONSTRUCTION. UPON COMPLETION OF WORK, THE CONTRACTOR SHALL REPAIR ANY DAMAGE THAT MAY HAVE OCCURED DUE TO CONSTRUCTION ON OR ABOUT THE PROPERTY.
12. THE CONTRACTOR SHALL KEEP THE GENERAL WORK AREA CLEAN AND HAZARD FREE DURING CONSTRUCTION AND DISPOSE OF ALL DIRT, DEBRIS, RUBBISH AND REMOVE EQUIPMENT NOT SPECIFIED AS REMAINING ON THE PROPERTY. PREMISES SHALL BE LEFT IN CLEAN CONDITION AND FREE FROM PAINT SPOTS, DUST, OR SMUDGES OF ANY NATURE.
13. THE CONTRACTOR SHALL COMPLY WITH ALL OSHA REQUIREMENTS AS THEY APPLY TO THIS PROJECT.
14. THE CONTRACTOR SHALL NOTIFY THE CONSTRUCTION MANAGER WHERE A CONFLICT OCCURS ON ANY OF THE CONTRACT DOCUMENTS. THE CONTRACTOR IS NOT TO ORDER MATERIAL OR CONSTRUCT ANY PORTION OF THE WORK THAT IS IN CONFLICT IS RESOLVED BY THE CONSTRUCTION MANAGER.
15. THE CONTRACTOR SHALL VERIFY ALL DIMENSIONS, ELEVATIONS, PROPERTY LINES, ETC. ON THE PROJECT.

APPROVALS

SITE ACQUISITION: _____ NAME _____ DATE

CONSTRUCTION: _____ NAME _____ DATE

RF: _____ NAME _____ DATE

ZONING: _____ NAME _____ DATE

PROPERTY OWNER: _____ NAME _____ DATE

VICINITY MAP

DRIVING DIRECTIONS:

FROM BETHESDA, MARYLAND TAKE I-270 NORTH TOWARDS FREDERICK, PROCEED NORTHWEST TOWARD EDGEMOOR LN, TURN LEFT ONTO OLD GEORGETOWN RD, TURN RIGHT ONTO THE BETHESDA TROLLEY TRAIL, CONTINUE STRAIGHT TO STAY ON THE BETHESDA TROLLEY TRAIL, TURN RIGHT TO STAY ON MATTHEW HENSON TRAIL, SLIGHT LEFT TO STAY ON MATTHEW HENSON TRAIL, SLIGHT RIGHT ONTO LLEWELLYN MANOR WAY, SHARP LEFT ONTO MD-182 N/NORWOOD RD, TURN RIGHT ONTO OLNEY SANDY SPRING RD, CONTINUE ONTO ASHTON RD, PROCEED 1.7 MILES TO 1300 ASHTON RD
ASHTON, MD 20861.

SYMBOLS AND ABBREVIATIONS

ADJ	ADJUSTABLE	MECH	MECHANICAL
APPROX	APPROXIMATE	MFR	MANUFACTURER
CAB	CABINET	MGB	MAIN GROUND BAR
CLG	CEILING	MIN	MINIMUM
CONC	CONCRETE	MTL	METAL
CONT	CONTINUOUS	NIC	NOT IN CONTRACT
CJ	CONSTRUCTION JOINT	NTS	NOT TO SCALE
DIA	DIAMETER	OC	ON CENTER
DWG	DRAWING	OPP	OPPOSITE
EGB	EQUIPMENT GROUND BAR	SF	SQUARE FOOT
EA	EACH	SHT	SHEET
ELEC	ELECTRICAL	SIM	SIMILAR
EL	ELEVATION	SS	STAINLESS STEEL
EQ	EQUAL	STL	STEEL
EQUIP	EQUIPMENT	TOC	TOP OF CONCRETE
EXT	EXTERIOR	TOM	TOP OF MASONRY
FF	FINISHED FLOOR	TOS	TOP OF STEEL
GA	GAGE	TYP	TYPICAL
GALV	GALVANIZED	VIF	VERIFY IN FIELD
GB	GROUND BAR	UON	UNLESS OTHERWISE NOTED
GC	GENERAL CONTRACTOR	WWF	WELDED WIRE FABRIC
GRND	GROUND	W/	WITH
LG	LONG	&	AND
LLH	LONG LEG HORIZONTAL	@	AT
MAX	MAXIMUM		

	SPOT ELEVATION
℄	CENTERLINE
⅊	PLATE
No. / SHT	DETAIL NUMBER / SHEET NUMBER
—G—	GROUND WIRE
———	COAXIAL CABLE
	ANTENNA

SHEET INDEX

T-1 TITLE SHEET
C-1 SITE PLAN
A-1 EXISTING AND NEW WORK COMPOUND PLANS
A-2 TOWER ELEVATION
S-1 ANTENNA LAYOUT PLANS, SCHEDULE, DETAILS AND NOTES
S-2 ANTENNA AND RADIO HEAD DETAILS
S-3 EQUIPMENT AND CABLE DETAILS
S-4 FIBER DISTRIBUTION CABINET DETAILS
S-5 SITE DETAILS AND STRUCTURAL NOTES
E-1 DC POWER DIAGRAMS
E-2 GROUNDING DETAILS AND NOTES
SP-1 SPECIFICATIONS
SP-2 SPECIFICATIONS
SP-3 EQUIPMENT CABLING SCHEMATIC
SP-4 2.5 GHz CABLE COLOR CODE DETAILS
SP-5 2.5 GHz CONNECTIVITY DETAILS
SP-6 2.5 GHz POWER CONNECTIVITY AND EQUIPMENT DETAILS

PROJECT DESCRIPTION

SCOPE OF WORK:

1. REMOVE (6) EXISTING ANTENNAS AND (6) EXISTING COAXIAL CABLES FROM FWT PLATFORM.
2. INSTALL NEW HANDRAIL, (6) NEW ANTENNAS, (3) NEW COMBINERS AND (15) RRHS ON EXISTING PLATFORM. (3) RRHS RELOCATED FROM GROUND.
3. INSTALL (4) NEW HYBRIFLEX CABLES IN THE FWT EXTENSION.
4. INSTALL GROUNDING.

PROPERTY OWNER: POTOMAC ELECTRICAL POWER COMPANY
C/O CORP. TAX. DEPT. STE 5617
709 9TH ST., NW
WASHINGTON, DC 20001

ENGINEERING: ENTREX COMMUNICATION SERVICES, INC.
MARC A. MARZULLO, P.E.
202-408-0960

APPLICANT: APC REALTY AND EQUIPMENT COMPANY, LLC.
d/b/a SPRINT
6391 SPRINT PARKWAY
OVERLAND PARK, KANSAS 66251

LATITUDE: N 39° 09' 39.17"
LONGITUDE: W 76° 59' 02.31"
GROUND ELEVATION: ±417' AMSL AT BASE
JURISDICTION: MONTGOMERY COUNTY
ACCOUNT IDENTIFIER: 08-00716671
PROPERTY INFO: MAP/ PARCEL: KT13/P335
ZONING: RC

Sprint
6391 SPRINT PARKWAY
OVERLAND PARK, KANSAS 66251

PROJECT NO:	1015.920
DESIGNER:	M.A.
ENGINEER:	M.M.

SCALE: AS SHOWN

WA54XC512
PEPCO TOWER 163S
0 ASHTON ROAD
ASHTON, MD 20861

(A/K/A : 1300 ASHTON ROAD ASHTON, MD 20861)

TITLE:

TITLE SHEET

SHEET NUMBER:

T-1

VICINITY MAP

SITE NOTES

1.) SITE NAME: PEPCO TOWER 163S
SITE NUMBER: WA54XC512

2.) THIS IS NOT A BOUNDARY SURVEY AND IS NOT TO BE USED FOR THE TRANSFER OF PROPERTY.

3.) THE SUBJECT PARCEL INFORMATION;
OWNER: POTOMAC ELECTRICAL POWER COMPANY

PREMISES ADDRESS: 0 ASHTON ROAD
ASHTON, MD 20861

MAILING ADDRESS:
C/O CORP TAX DEPT STE 5617
709 9TH ST NW
WASHINGTON, DC 20001-4501

ACCOUNT IDENTIFIER: 08-00716671
MAP/PARCEL: KT13/335

4.) THE LOCATION OF THE EXISTING TOWER IS AS FOLLOWS; THE VALUES LISTED BELOW ARE WITHIN ±50' HORIZONTAL AND ±20' VERTICAL.
LATITUDE: N 39° 09' 39.17"
LONGITUDE: W 76° 59' 02.31"
ELEVATION: ±417' AMSL AT BASE

LINE TYPES

BOUNDARY LINE – PARENT PARCEL
UNSURVEYED LINE – BOUNDARY OF ADJOINERS
CENTER LINE
CONSERVATION EASEMENT
BUILDING SET BACK
EDGE OF ASPHALT
FENCE LINE – CHAIN
1' CONTOUR LINE
5' CONTOUR LINE
TREE OR VEGETATION LINE
CONCRETE SURFACE
ASPHALT SURFACE
GRAVEL SURFACE

LEGEND

FOUND PROPERTY CORNER
UTILITY POLE
GUY ANCHOR
SIGN
LIGHT POLE
SANITARY MANHOLE
INDIVIDUAL TREE – DECIDUOUS

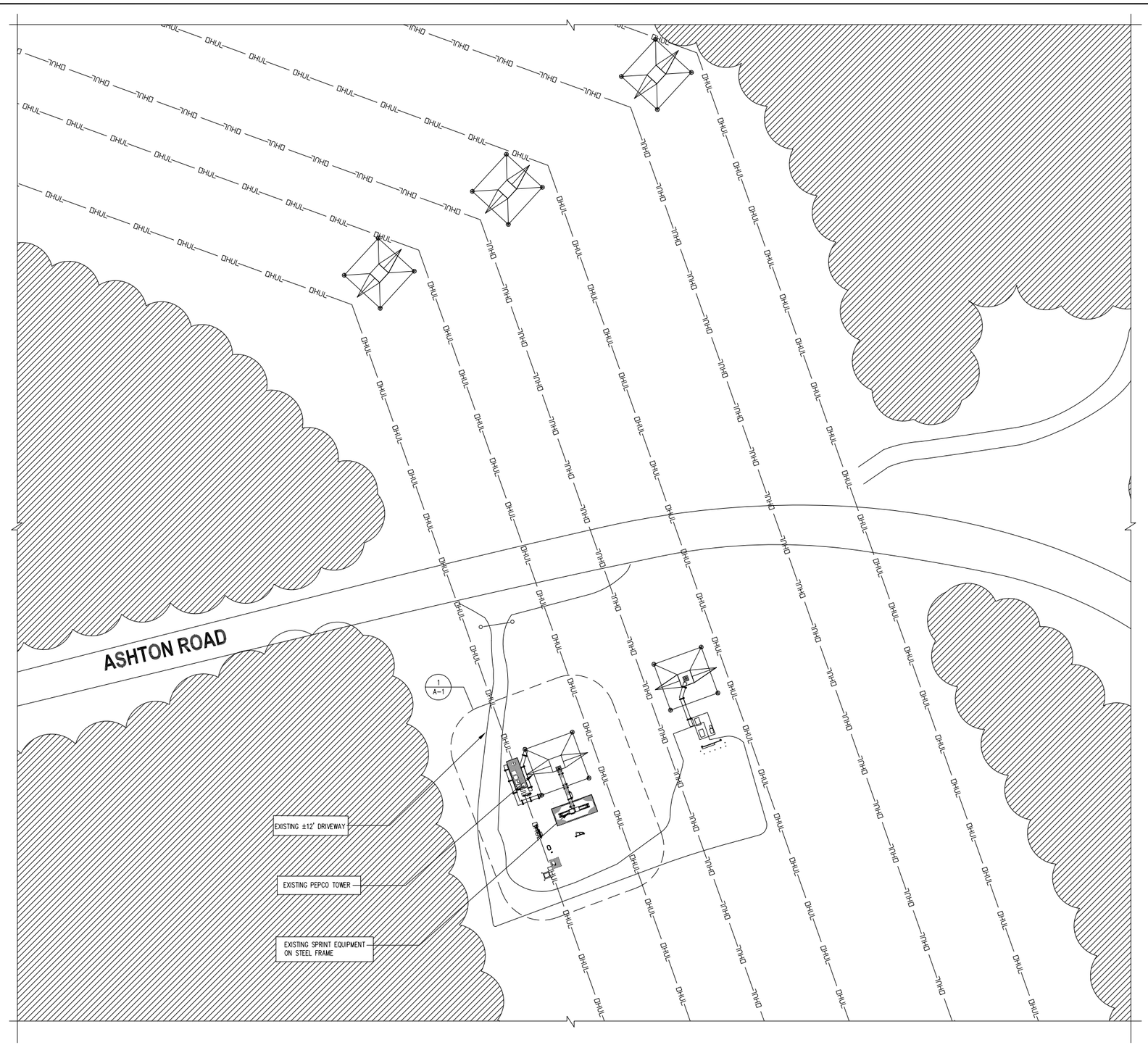

SITE PLAN
SCALE: 1"=30'-0"
1 C-1
TRUE NORTH

GRAPHIC SCALE
50 0 25 50 100 200
(IN FEET)
1 inch = 50 ft.

entrex
communication services, inc.
6600 Rockledge Drive, Suite 550
Bethesda, MD 20817
Phone: (202)408-0960
Fax: (202)408-0961

SUBMITTALS

DATE	DESCRIPTION	REV.
10-09-18	CONSTRUCTION REVIEW	
10-29-18	CONSTRUCTION REVIEW	

SEAL:

Sprint
6391 SPRINT PARKWAY
OVERLAND PARK, KANSAS 66251

PROJECT NO: 1015.920
DESIGNER: M.A.
ENGINEER: M.M.
SCALE: AS SHOWN

WA54XC512
PEPCO TOWER 163S
0 ASHTON ROAD
ASHTON, MD 20861

(A/K/A : 1300 ASHTON ROAD ASHTON, MD 20861)

TITLE:

SITE PLAN

SHEET NUMBER:
C-1

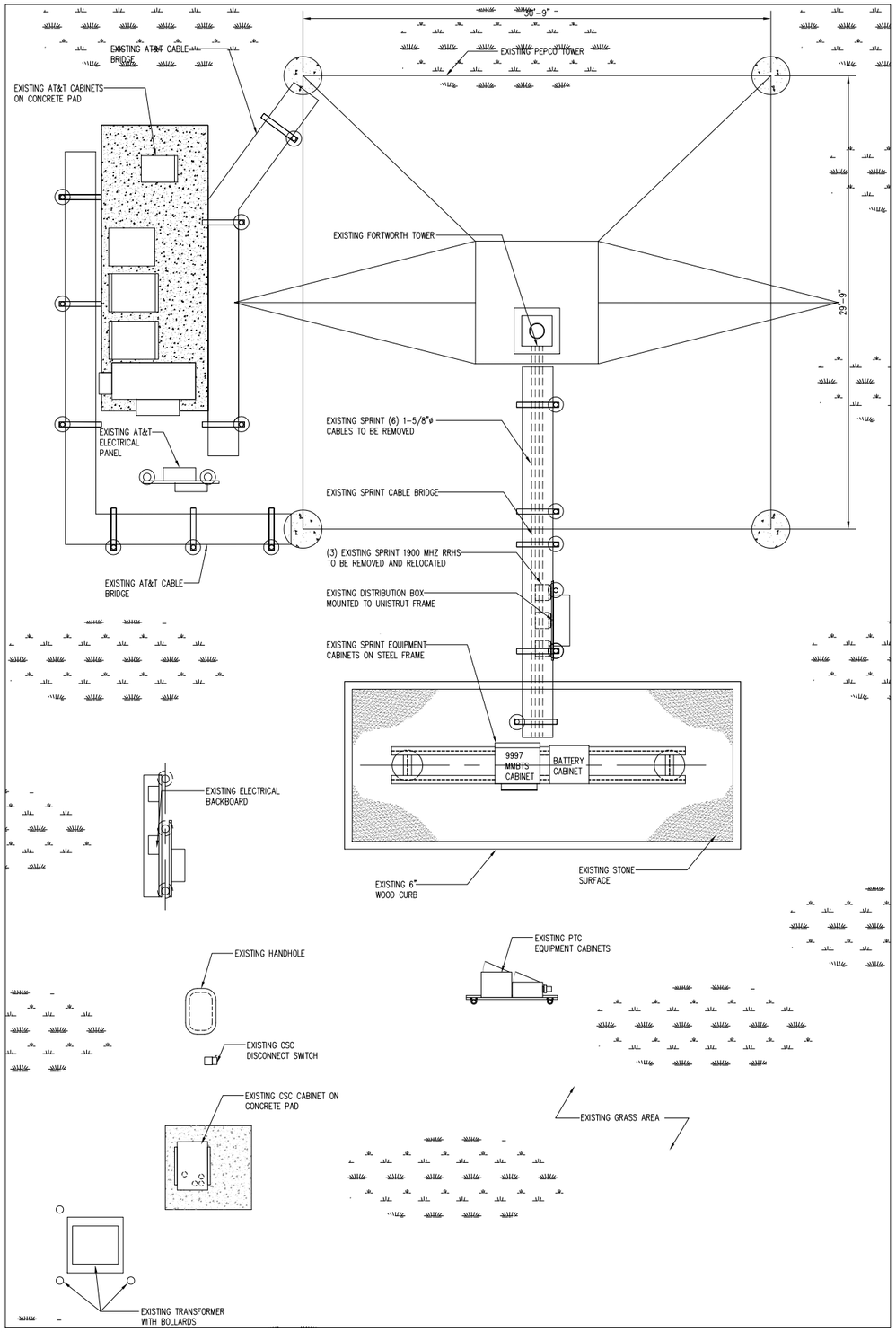

EXISTING COMPOUND LAYOUT PLAN (1 / A-1)
SCALE: 1/4"=1'-0"
TRUE NORTH

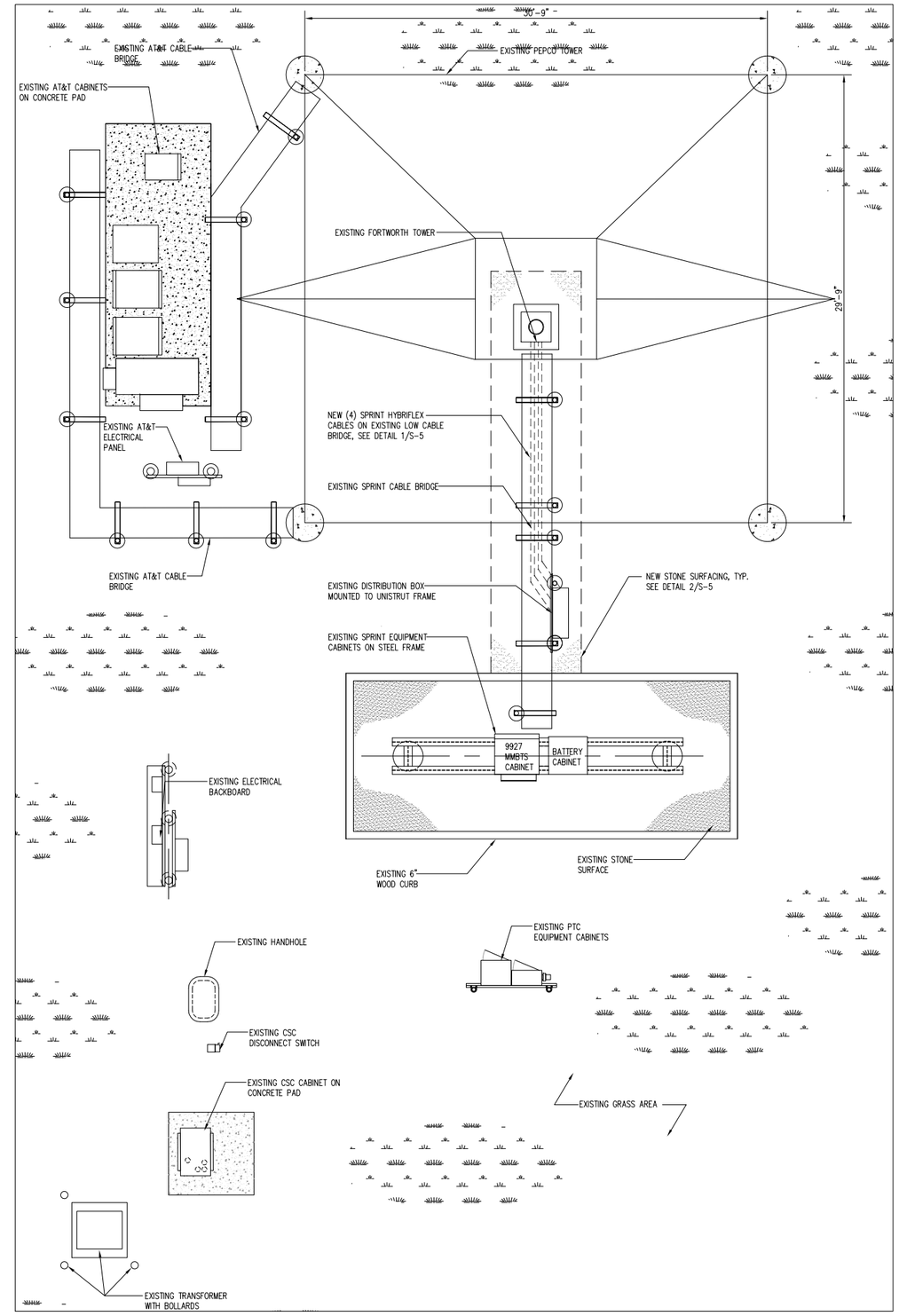

NEW COMPOUND LAYOUT PLAN (2 / A-1)
SCALE: 1/4"=1'-0"
TRUE NORTH

entrex
communication services, inc.

6600 Rockledge Drive, Suite 550
Bethesda, MD 20817
Phone: (202)408-0960
Fax: (202)408-0961

SUBMITTALS

DATE	DESCRIPTION	REV.
10-09-18	CONSTRUCTION REVIEW	
10-29-18	CONSTRUCTION REVIEW	

SEAL:

Sprint
6391 SPRINT PARKWAY
OVERLAND PARK, KANSAS 66251

PROJECT NO: 1015.920
DESIGNER: M.A.
ENGINEER: M.M.

SCALE: AS SHOWN

WA54XC512
PEPCO TOWER 163S
0 ASHTON ROAD
ASHTON, MD 20861

(A/K/A : 1300 ASHTON ROAD ASHTON, MD 20861)

TITLE:

EXISTING AND NEW WORK COMPOUND PLANS

SHEET NUMBER:

A-1

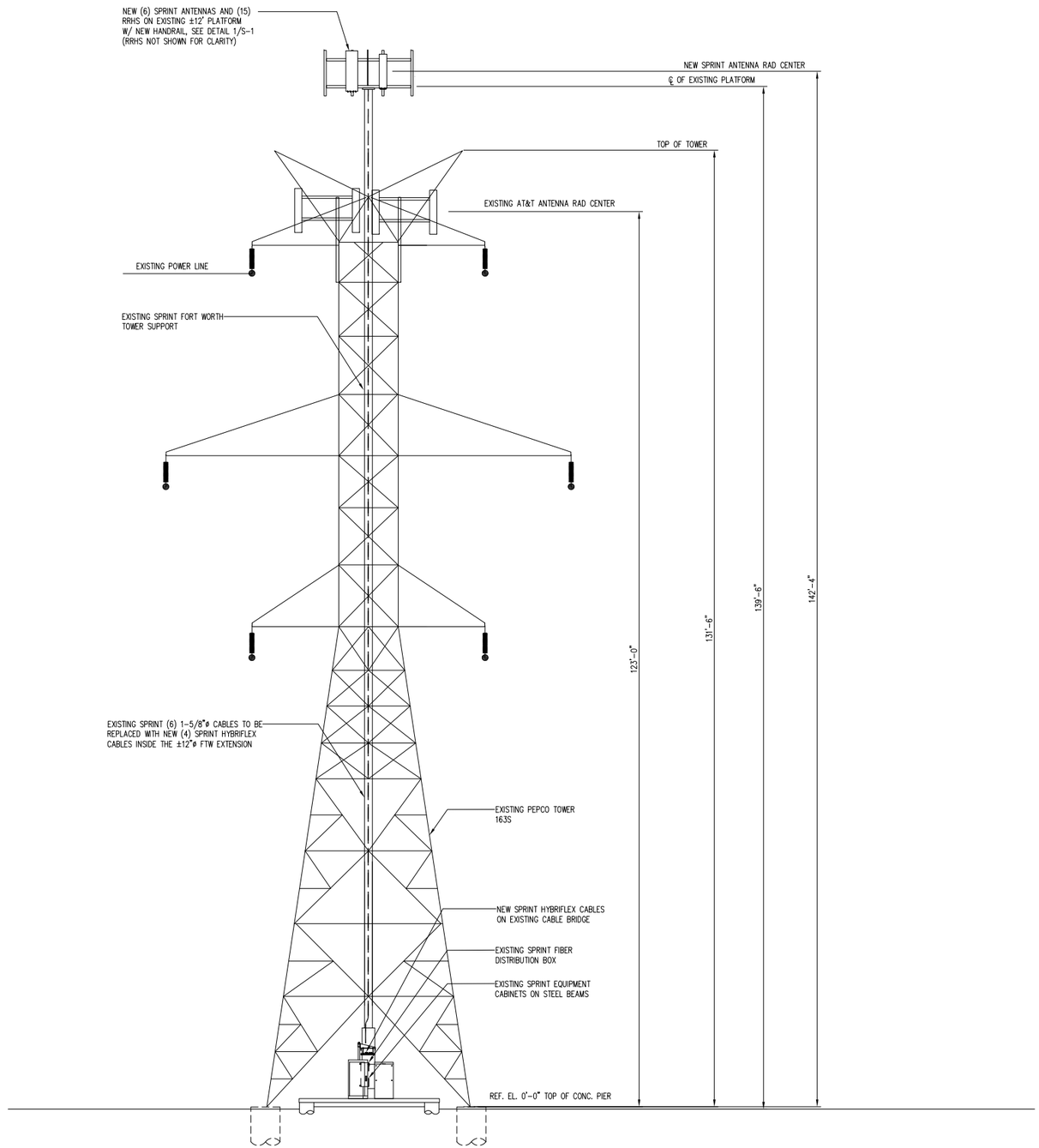

TOWER ELEVATION (1 / A-2)
SCALE: 1/8" = 1'-0"

entrex
communication services, inc.

6600 Rockledge Drive, Suite 550
Bethesda, MD 20817
Phone: (202)408-0960
Fax: (202)408-0961

SUBMITTALS

DATE	DESCRIPTION	REV.
10-09-18	CONSTRUCTION REVIEW	
10-29-18	CONSTRUCTION REVIEW	

SEAL:

Sprint
6391 SPRINT PARKWAY
OVERLAND PARK, KANSAS 66251

PROJECT NO: 1015.920
DESIGNER: M.A.
ENGINEER: M.M.

SCALE: AS SHOWN

WA54XC512
PEPCO TOWER 163S
0 ASHTON ROAD
ASHTON, MD 20861

(A/K/A : 1300 ASHTON ROAD ASHTON, MD 20861)

TITLE:

TOWER ELEVATION

SHEET NUMBER:

A-2

ANTENNA AND COAXIAL CABLE SCHEDULE (NO FINAL EBTS)

LOCATION		AZIMUTH	RAD CENTER	TECHNOLOGY MHZ	ANTENNA MODEL #	MECHANICAL DOWN-TILT	EFFECTIVE DOWN-TILT	RRH'S	FILTER	COMBINER MODEL #	CABLE INFO	CABLE LENGTH	JUMPER LENGTH	COLOR CODE
SECTOR 1	A-1	10°	142'-4"	800/1900	(N) RFS APXVBBLL15X-43-C-I20 (66.7" H x 19.6" W x 8.5" D)	0°	-0° (800 MHz) -0° (1900 MHz	(1E) RRH 4x45-1900 (1N) RRH 4x45-1900 (2N) RRH 2x50-800	-	RFS IBC1900AA-3	(2N) 1.66"ø HYBRID 4 AWG/6 PAIR 48 MM FIBER	±185'	10'-0" (LCF12-50J)	SEE NOTE 9.
	A-2	10°	142'-4"	2500	(N) RFS APXVTM14-ALU-I20 (71.9"H x 13.8" W x 8.2"D)	0°	0°	(1N) TD-RRH 8x20-25	-	-	SHARED HYBRID CABLE	-	10'-0" (LCF12-50J)	
SECTOR 2	B-1	140°	142'-4"	800/1900	(N) RFS APXVBBLL15X-43-C-I20 (66.7" H x 19.6" W x 8.5" D)	0°	-0° (800 MHz) -0° (1900 MHz	(1E) RRH 4x45-1900 (1N) RRH 4x45-1900 (2N) RRH 2x50-800	-	RFS IBC1900AA-3	(1N) 1.66"ø HYBRID 4 AWG/6 PAIR 48 MM FIBER	±185'	10'-0" (LCF12-50J)	SEE NOTE 9.
	B-2	140°	142'-4"	2500	(N) RFS APXVTM14-ALU-I20 (71.9"H x 13.8" W x 8.2"D)	0°	0°	(1N) TD-RRH 8x20-25	-	-	SHARED HYBRID CABLE	-	10'-0" (LCF12-50J)	
SECTOR 3	C-1	255°	142'-4"	800/1900	(N) RFS APXVBBLL15X-43-C-I20 (66.7" H x 19.6" W x 8.5" D)	0°	-0° (800 MHz) -0° (1900 MHz	(1E) RRH 4x45-1900 (1N) RRH 4x45-1900 (2N) RRH 2x50-800	-	RFS IBC1900AA-3	(1N) 1.66"ø HYBRID 4 AWG/6 PAIR 48 MM FIBER	±185'	10'-0" (LCF12-50J)	SEE NOTE 9.
	C-2	255°	142'-4"	2500	(N) RFS APXVTM14-ALU-I20 (71.9"H x 13.8" W x 8.2"D)	0°	0°	(1N) TD-RRH 8x20-25	-	-	SHARED HYBRID CABLE	-	10'-0" (LCF12-50J)	

(1E) ONE EXISTING
(1N) ONE NEW

COLOR CODE	
W	WHITE
Br	BROWN
G	GREEN
R	RED
Bl	BLUE
P	PURPLE
Y	YELLOW

CABLE MINIMUM BEND RADIUS

1/2"ø JUMPER	1-1/4"ø HYBRIFLEX
5"	20"

ANTENNA AND RF CABLE NOTES

1. ANTENNAS SHALL BE FURNISHED WITH MOUNTING BRACKETS.

2. PROVIDE 1/2" DIAMETER JUMPER CABLE 10'-0" MAXIMUM LENGTH FROM ANTENNA TO RRH.

3. ANTENNA CENTERLINE HEIGHT IS IN REFERENCE TO ELEVATION 0.0'.

4. CONTRACTOR SHALL INSTALL COLOR CODE RINGS ON EACH END OF JUMPER CABLES AND JUMPER CABLES WITH UV RESISTANT TAPE. ALL CABLES SHALL BE MARKED AT THE TOP AND BOTTOM WITH 2" COLOR TAPE OR STENCIL TAG. COLOR TAPE MAY BE OBTAINED FROM GRAYBAR ELECTRONIC. THE FIRST RING IS THE CLOSEST TO THE END OF THE CABLE. WRAP 2" COLORED TAPE A MINIMUM OF 3 TIMES AROUND THE CIRCUMFERENCE OF THE COAX, KEEPING THE TAPE IN THE SAME AREA AS MUCH AS POSSIBLE. THIS WILL ALLOW THE REMOVAL OF THE TAPE THAT WILL FADE OR DISCOLOR DUE TO WEATHER.

5. PROVIDE PHOTOGRAPHS SHOWING COMPLETE INSTALLATION OF THE ANTENNA MOUNTS, WEATHERPROOFING AND CABLE CODING.

6. THE NORTH ARROW ON THE PLANS REFERS TO TRUE NORTH. THE CONTRACTOR SHALL VERIFY THE NORTH REFERENCE PRIOR TO CONSTRUCTION AND NOTIFY THE ARCHITECT/ENGINEER OF ANY DISCREPANCY.

7. THE CONTRACTOR SHALL SUPPLY ALL CONNECTION HARDWARE TO SECURE THE RF CABLES. ALL CONNECTION HARDWARE SHALL BE STAINLESS STEEL.

8. THE OWNER SHALL FURNISH THE ANTENNAS, THE RF RADIO EQUIPMENT AND OTHER MATERIALS FOR THE PROJECT. THE CONTRACTOR SHALL VERIFY WITH THE OWNER THE MATERIALS TO BE FURNISHED PRIOR TO SUBMITTING A BID.

9. REFER TO CABLE COLOR CODING DETAILS.

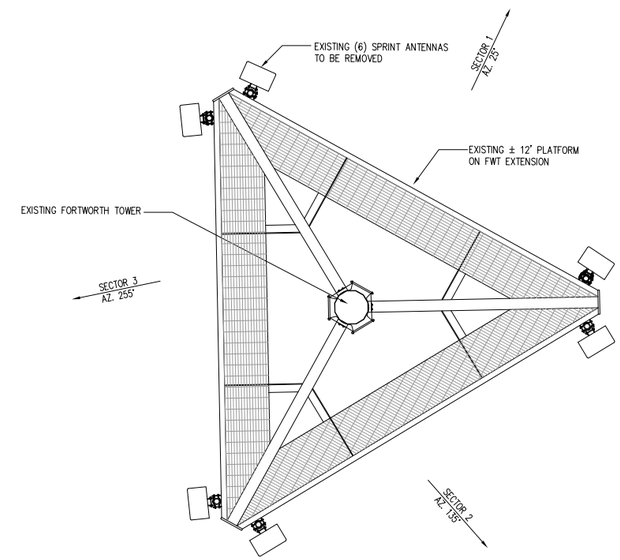

EXISTING ANTENNA LOCATION PLAN

SCALE: 3/8"=1'-0"

1 S-1 TRUE NORTH

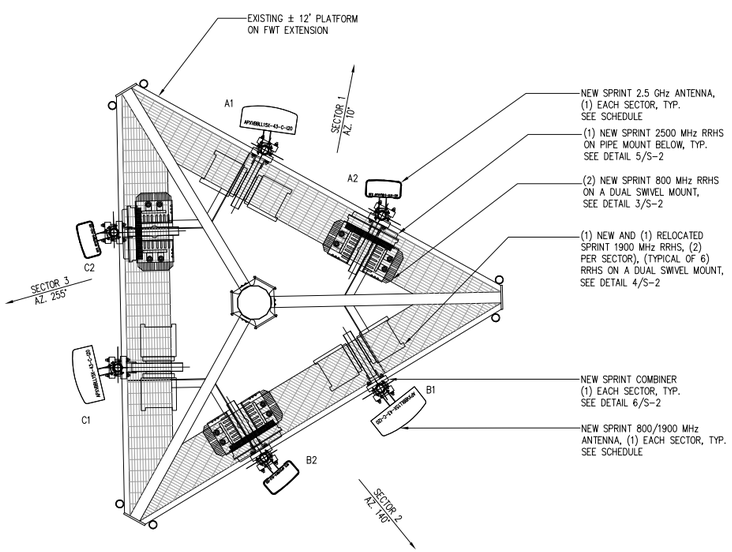

NEW ANTENNA LOCATION PLAN

SCALE: 1/2"=1'-0"

2 S-1 TRUE NORTH

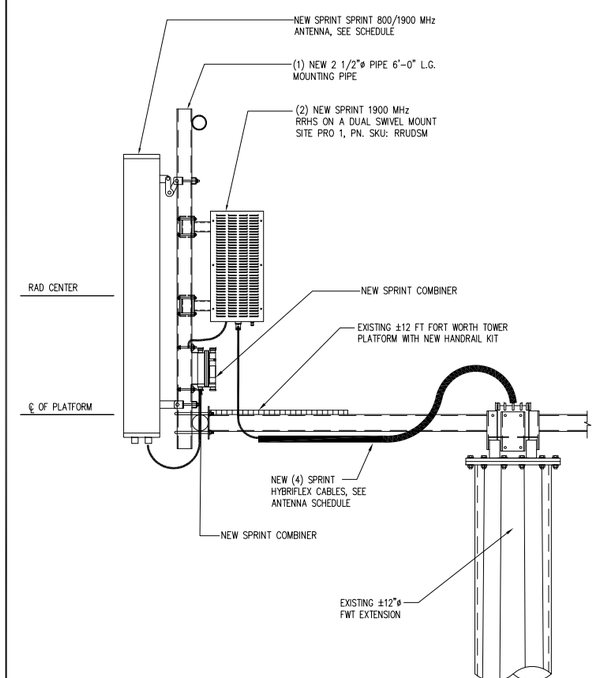

800/1900 MHz ANTENNA AND 1900 MHz RRHS MOUNTING DETAIL

SCALE: 1"=1'-0"

3 S-1

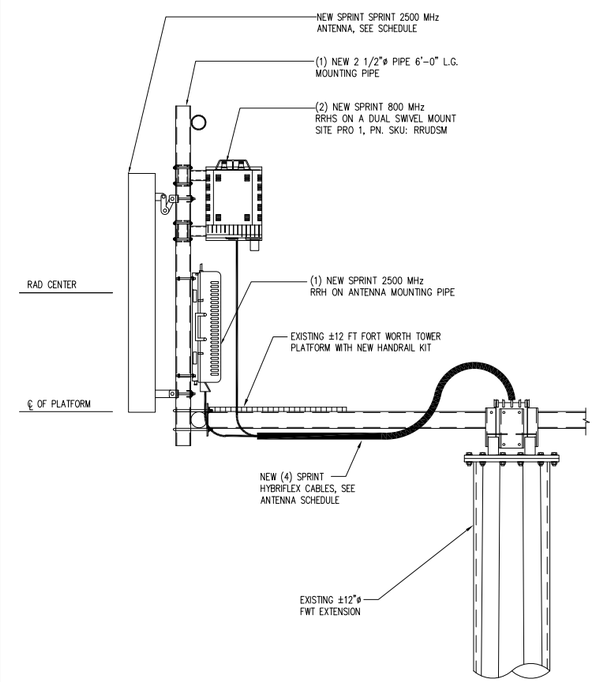

2.5 GHz ANTENNA AND 800 MHz RRHS MOUNTING DETAIL

SCALE: 1"=1'-0"

3 S-1

entrex communication services, inc.
6600 Rockledge Drive. Suite 550
Bethesda, MD 20817
Phone: (202)408-0960
Fax: (202)408-0961

SUBMITTALS

DATE	DESCRIPTION	REV.
10-09-18	CONSTRUCTION REVIEW	
10-29-18	CONSTRUCTION REVIEW	

SEAL:

Sprint
8391 SPRINT PARKWAY
OVERLAND PARK, KANSAS 66251

PROJECT NO:	1015.920
DESIGNER:	M.A.
ENGINEER:	M.M.

SCALE: AS SHOWN

WA54XC512
PEPCO TOWER 163S
0 ASHTON ROAD
ASHTON, MD 20861

(A/K/A : 1300 ASHTON ROAD ASHTON, MD 20861)

TITLE:

ANTENNA LAYOUT PLANS, SCHEDULE, DETAILS AND NOTES

SHEET NUMBER:

S-1

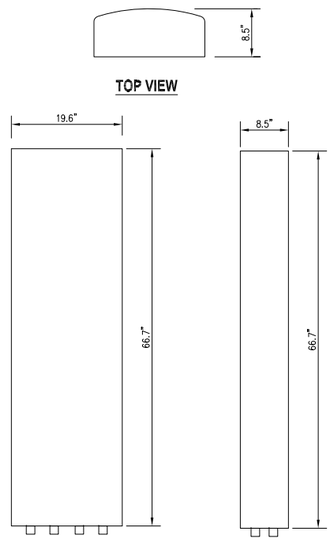

ANTENNA MANUF.: RFS
MODEL: APXVBBLL15X-43-C-I20

FREQUENCY RANGE: 800/1900/2500 MHz

ANTENNA DIMENSIONS: 66.7" H x 19.6" W x 8.5" D
WEIGHT WITH MOUNTING HARDWARE: 82.5 LBS

800/1900 MHz ANTENNA DETAIL (1 / S-2)

SCALE: 1"=1'-0"

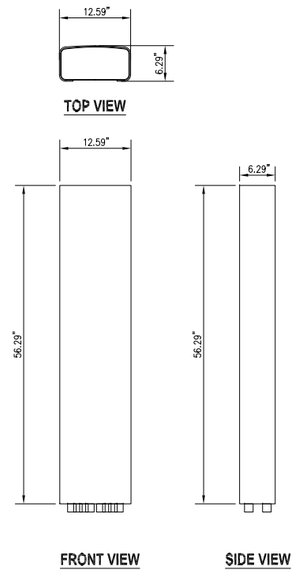

ANTENNA MODEL
RFS APXVTM14-ALU-I20

FREQUENCY RANGE: 2490-2600 MHz
2600-2690 MHZ

ANTENNA DIMENSIONS: 56.29" H x 12.59" W x 6.29" D
WEIGHT WITH MOUNTING HARDWARE: 64 LBS.

2.5 GHz ANTENNA DETAIL (2 / S-2)

SCALE: 800/1900 MHz

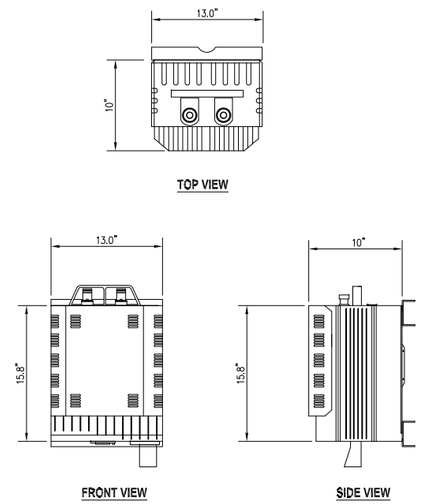

MODEL: ALU 800 2X50 (NO FILTER)
DIMENSIONS: 15.8"Hx13.0"Wx10"D
RRH WEIGHT W/MOUNTS: ±60.1 LBS

800 MHz RRH DETAIL (3 / S-2)

SCALE: 1-1/2"=1'-0"

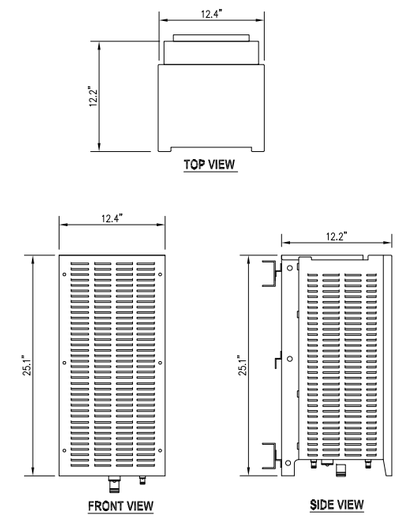

MODEL: ALU 1900 4X45
DIMENSIONS: 25.1"Hx12.4"Wx12.2"D
RRH WEIGHT W/SOLAR SHIELD AND BRACKETS WEIGHT: ±74.5 LBS

1900 MHz RRH DETAIL (4 / S-2)

SCALE: 1-1/2"=1'-0"

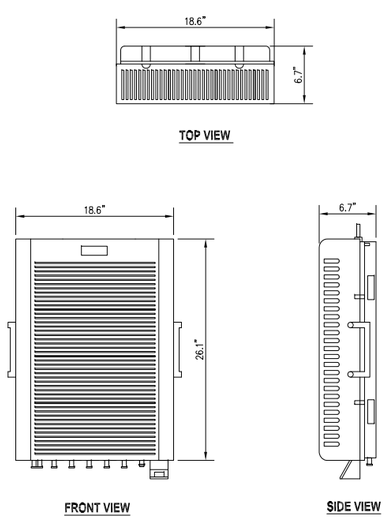

MODEL: ALU TD-RRH8x20
DIMENSIONS: 26.1"Hx18.6"Wx6.7"D
RRH WEIGHT BRACKETS WEIGHT: ±80.0 LBS

2500 MHz RRH DETAIL (5 / S-2)

SCALE: 1-1/2"=1'-0"

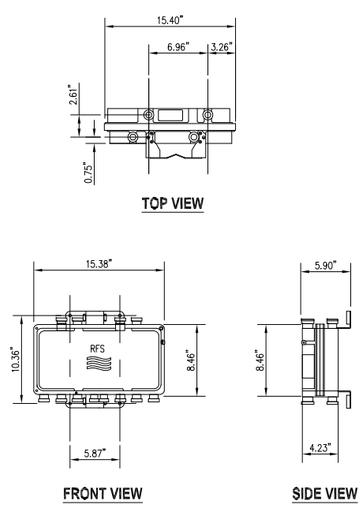

MODEL: RFS IBC1900AA-3
DIMENSIONS: 15.4"H x 9.4"W x 4.2"D
RRH WEIGHT W/MOUNTS: ±22 LBS

1900 MHz RRH COMBINER DETAIL (6 / S-2)

SCALE: 1-1/2"=1'-0"

entrex
communication services, inc.

6600 Rockledge Drive, Suite 550
Bethesda, MD 20817
Phone: (202)408-0960
Fax: (202)408-0961

SUBMITTALS

DATE	DESCRIPTION	REV.
10-09-18	CONSTRUCTION REVIEW	
10-29-18	CONSTRUCTION REVIEW	

SEAL:

Sprint
6391 SPRINT PARKWAY
OVERLAND PARK, KANSAS 66251

PROJECT NO: 1015.920
DESIGNER: M.A.
ENGINEER: M.M.

SCALE: AS SHOWN

WA54XC512
PEPCO TOWER 163S
0 ASHTON ROAD
ASHTON, MD 20861

(A/K/A : 1300 ASHTON ROAD ASHTON, MD 20861)

TITLE:

ANTENNA AND RADIO HEAD DETAILS

SHEET NUMBER:

S-2

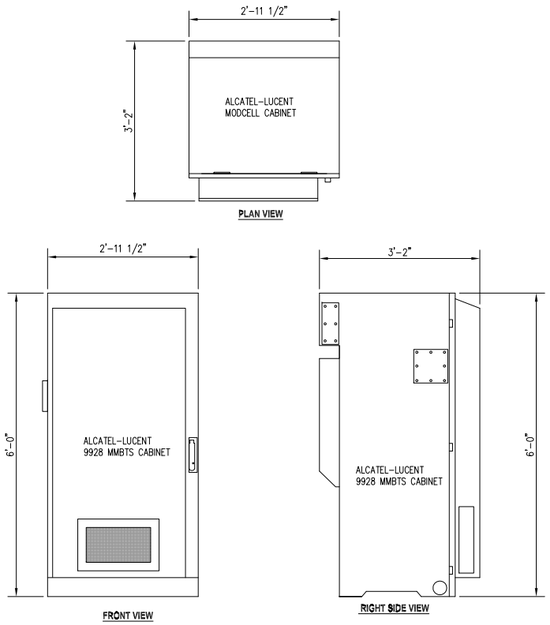

NOTE: EXISTING CABINET WEIGHT FULLY LOADED = 1074 LBS
NEW AUXILIARY CABINET EXTENSION 110 LBS

EXISTING ALU 9928 MMBTS CABINET

SCALE: 3/4"=1'-0"

1 / S-3

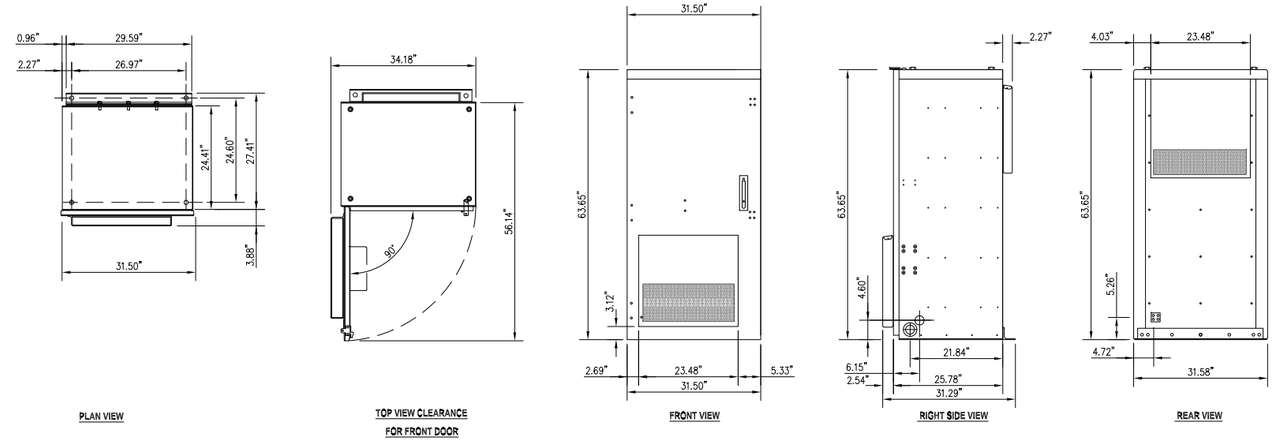

NOTES
1. TE CABINET IS NOT LIFTED WITH BATTERIES IN PLACE. ALL BATTERIES

RRH MODEL
ALCATEL LUCENT TD-RRH8x20

CABINET SIZE:	63.65" x 31.50"x 31.29"
SHIPPING WEIGHT:	600 LBS.
LIFT WEIGHT:	540 LBS.
WEIGHT WITH BATTERIES INSTALLED:	2640 LBS.

EXISTING ALCATEL LUCENT BATTERY CABINET DETAILS

SCALE: 1"=1'-0"

2 / S-3

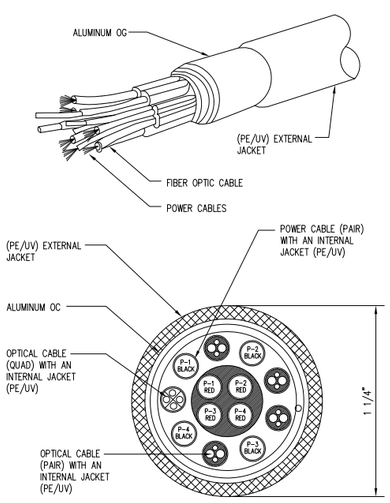

SEE THE ANTENNA SCHEDULE FOR THE SPECIFIC HYBRIFLEX CABLE FOR EACH SECTOR

HYBRIFLEX CABLE DETAIL

SCALE: 1" = 1'-0"

3 / S-3

entrex
communication services, inc.

6600 Rockledge Drive. Suite 550
Bethesda, MD 20817
Phone: (202)408-0960
Fax: (202)408-0961

SUBMITTALS

DATE	DESCRIPTION	REV.
10-09-18	CONSTRUCTION REVIEW	
10-29-18	CONSTRUCTION REVIEW	

SEAL:

Sprint
6391 SPRINT PARKWAY
OVERLAND PARK, KANSAS 66251

PROJECT NO:	1015.920
DESIGNER:	M.A.
ENGINEER:	M.M.

SCALE: AS SHOWN

WA54XC512
PEPCO TOWER 163S
0 ASHTON ROAD
ASHTON, MD 20861

(A/K/A : 1300 ASHTON ROAD ASHTON, MD 20861)

TITLE:

EQUIPMENT AND CABLE DETAILS

SHEET NUMBER:

S-3

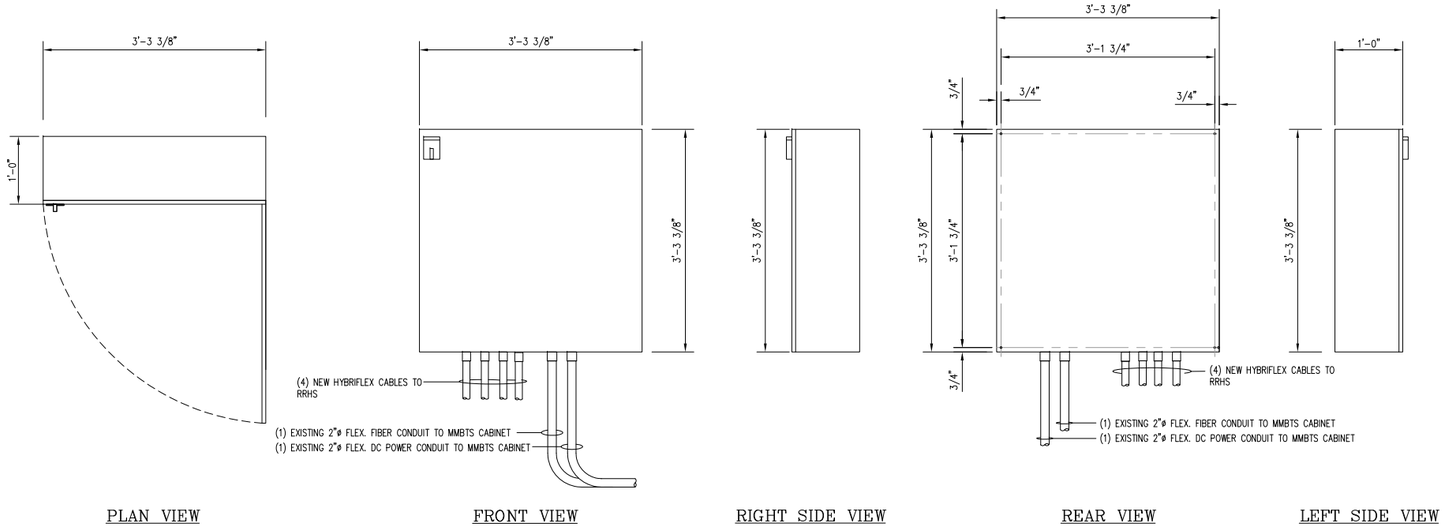

NOTE: DISTRIBUTION CABINET SHALL BE NEMA 3R RATED
CABINET WEIGHT = 150 LBS
SECURE CABINET TO WALL ON P1000 UNISTRUT
SCREWED INTO THE WALL STUD FLANGES

FIBER DISTRIBUTION CABINET DETAILS (1 / S-4)
SCALE: 3/4" = 1'-0"

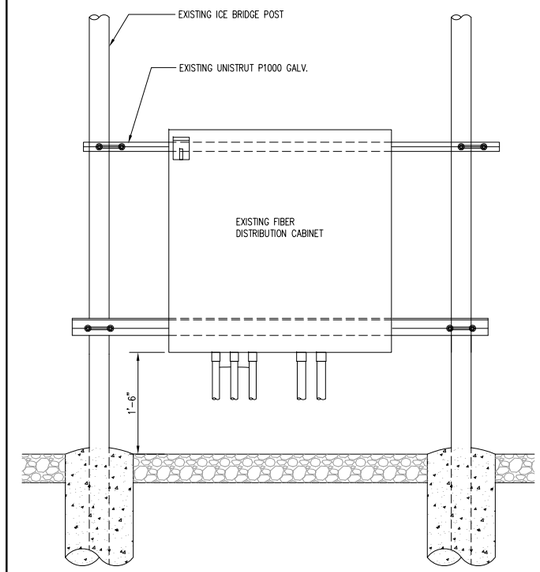

FIBER DISTRIBUTION MOUNTING CABINET DETAILS (2 / S-4)
SCALE: 3/4" = 1'-0"

entrex communication services, inc.
6600 Rockledge Drive, Suite 550
Bethesda, MD 20817
Phone: (202)408-0960
Fax: (202)408-0961

SUBMITTALS

DATE	DESCRIPTION	REV.
10-09-18	CONSTRUCTION REVIEW	
10-29-18	CONSTRUCTION REVIEW	

SEAL:

Sprint
8391 SPRINT PARKWAY
OVERLAND PARK, KANSAS 66251

PROJECT NO: 1015.920
DESIGNER: M.A.
ENGINEER: M.M.
SCALE: AS SHOWN

WA54XC512
PEPCO TOWER 163S
0 ASHTON ROAD
ASHTON, MD 20861

(A/K/A : 1300 ASHTON ROAD ASHTON, MD 20861)

TITLE:

FIBER DISTRIBUTION CABINET DETAILS

SHEET NUMBER:

S-4

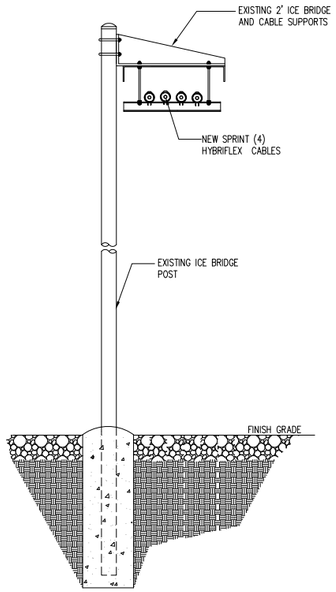

CABLE SUPPORT DETAIL (1 / S-5)
SCALE: 1"=1'-0"

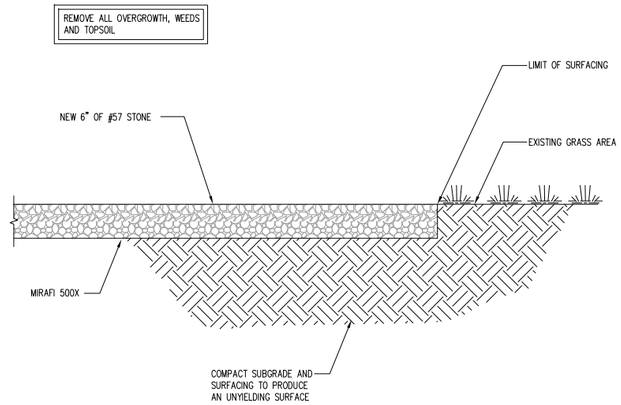

SITE SURFACING DETAIL (2 / S-5)
SCALE: 1 1/2"=1'-0"

STRUCTURAL NOTES

1. THE DESIGN REQUIREMENTS ARE PER THE 2015 INTERNATIONAL BUILDING CODE. THE WIND SPEED UTILIZED FOR DESIGN IS 115 MPH. THE TOWER IS ANALYZED/DESIGNED IN ACCORDANCE WITH ENERCON'S REQUIREMENTS BY OTHERS.

2. THE INFORMATION SHOWN ON THESE DRAWINGS WAS OBTAINED BY FIELD MEASUREMENT. THE GENERAL CONTRACTOR SHALL VERIFY ALL EXISTING CONDITIONS AND NOTIFY THE ARCHITECT OF ANY DISCREPANCIES PRIOR TO ORDERING MATERIALS OR PROCEEDING WITH CONSTRUCTION.

3. THE GENERAL CONTRACTOR AND HIS SUB CONSULTANTS SHALL BE RESPONSIBLE FOR OBTAINING ALL PERMITS AND INSPECTIONS THAT MAY BE REQUIRED FOR THE WORK INCLUDING ALL TRADE PERMITS.

4. STRUCTURAL STEEL SHALL CONFORM TO THE LATEST EDITION OF THE AISC SPECIFICATION FOR STRUCTURAL STEEL BUILDINGS – ALLOWABLE STRESS DESIGN AND PLASTIC DESIGN INCLUDING THE COMMENTARY AND THE AISC CODE OF STANDARD PRACTICE.

5. STRUCTURAL STEEL PLATES, CHANNELS AND ANGLES SHALL CONFORM TO ASTM A36. STRUCTURAL STEEL W SHAPES SHALL CONFORM TO ASTM A992. STRUCTURAL STEEL PIPES SHALL CONFORM TO ASTM A53 GRADE B. STRUCTURAL STEEL TUBING SHALL CONFORM TO ASTM A500 GRADE B. ALL STRUCTURAL STEEL COMPONENTS AND FABRICATED ASSEMBLIES SHALL BE HOT DIP GALVANIZED AFTER FABRICATION. COLD GALVANIZE ALL FIELD PUNCHED HOLES, FIELD CUT SURFACES OR SURFACES WHERE GALVANIZE SURFACE IS DAMAGED.

6. WELDING SHALL BE IN ACCORDANCE WITH THE AMERICAN WELDING SOCIETY (AWS) D1.1 STRUCTURAL WELDING CODE – STEEL (LATEST EDITION). WELD ELECTRODES SHALL BE E70XX UNLESS NOTED OTHERWISE.

7. STRUCTURAL THREADED FASTENERS FOR STEEL ANTENNA MOUNTING ASSEMBLIES SHALL CONFORM TO ASTM A307 OR ASTM A36. STRUCTURAL FASTENERS FOR STRUCTURAL STEEL FRAMING SHALL CONFORM TO ASTM A325. STRUCTURAL FASTENERS SHALL BE 5/8" DIAMETER BEARING TYPE CONNECTIONS WITH THE THREADS EXCLUDED FROM THE SHEAR PLANE FOR ANGLES. STRUCTURAL FASTENERS SHALL BE 3/4" DIAMETER BEARING TYPE CONNECTIONS WITH THE THREADS EXCLUDED FROM THE SHEAR PLANE FOR ANGLES AND 3/4" MINIMUM FOR ALL OTHER STRUCTURAL SHAPES. ALL EXPOSED STRUCTURAL FASTENERS, NUTS AND WASHERS SHALL BE HOT DIP GALVANIZED UNLESS OTHERWISE NOTED.

entrex communication services, inc.
6600 Rockledge Drive. Suite 550
Bethesda, MD 20817
Phone: (202)408-0960
Fax: (202)408-0961

SUBMITTALS

DATE	DESCRIPTION	REV.
10-09-18	CONSTRUCTION REVIEW	
10-29-18	CONSTRUCTION REVIEW	

SEAL:

Sprint
6391 SPRINT PARKWAY
OVERLAND PARK, KANSAS 66251

PROJECT NO: 1015.920
DESIGNER: M.A.
ENGINEER: M.M.

SCALE: AS SHOWN

WA54XC512
PEPCO TOWER 163S
0 ASHTON ROAD
ASHTON, MD 20861

(A/K/A : 1300 ASHTON ROAD ASHTON, MD 20861)

TITLE:

SITE DETAILS AND STRUCTURAL NOTES

SHEET NUMBER:

S-5

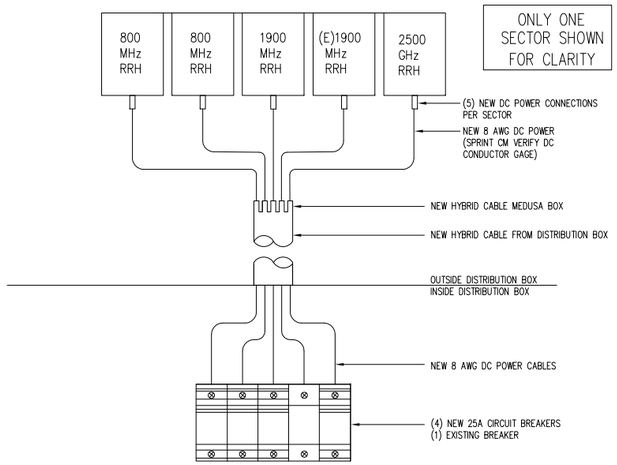

DC ONE-LINE DIAGRAM

SCALE: N.T.S.

1 / E-1

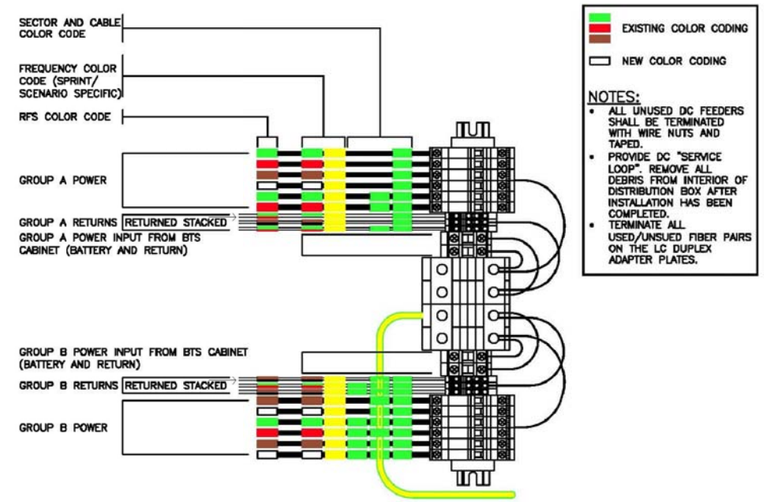

DC POWER DISTRIBUTION

SCALE: N.T.S

2 / E-1

entrex
communication services, inc.

6600 Rockledge Drive, Suite 550
Bethesda, MD 20817
Phone: (202)408-0960
Fax: (202)408-0961

SUBMITTALS

DATE	DESCRIPTION	REV.
10-09-18	CONSTRUCTION REVIEW	
10-29-18	CONSTRUCTION REVIEW	

SEAL:

Sprint
6391 SPRINT PARKWAY
OVERLAND PARK, KANSAS 66251

PROJECT NO: 1015.920
DESIGNER: M.A.
ENGINEER: A.S.

SCALE: AS SHOWN

WA54XC512
PEPCO TOWER 163S
0 ASHTON ROAD
ASHTON, MD 20861

(A/K/A : 1300 ASHTON ROAD ASHTON, MD 20861)

TITLE:

DC POWER DIAGRAMS

SHEET NUMBER:

E-1

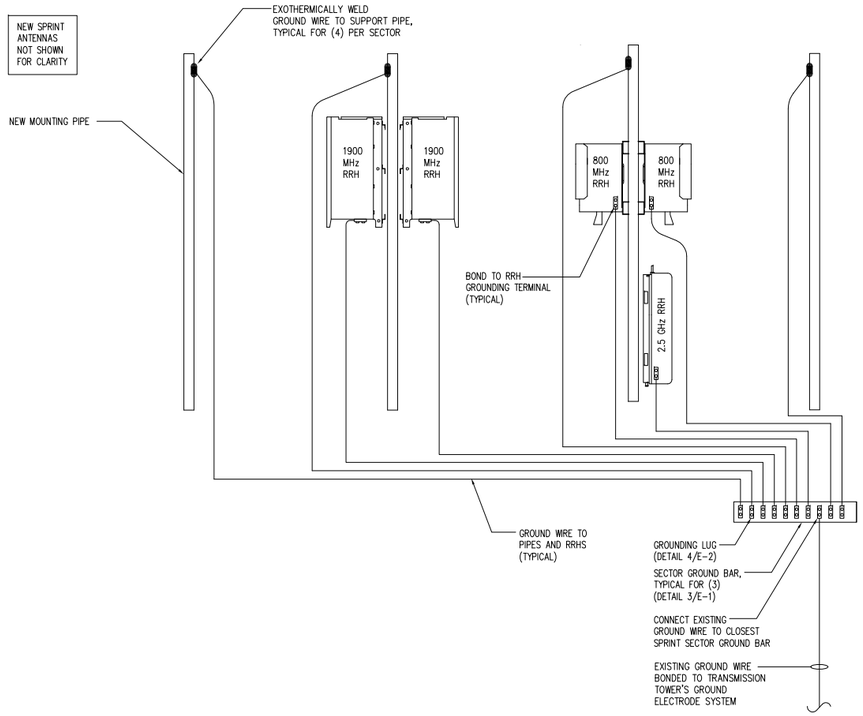

NOTES:

1. ALL GROUND WIRES SHOWN SHALL BE GREEN-INSULATED 2 AWG COPPER UNLESS NOTED OTHERWISE.

TYPICAL SECTOR GROUNDING CONNECTIONS

SCALE: N.T.S.

1 / E-2

GROUNDING NOTES

1. GROUNDING SHALL COMPLY WITH ARTICLE 250 OF NATIONAL ELECTRICAL CODE.
2. GROUND WIRES ABOVE GRADE SHALL BE #2 AWG GREEN-INSULATED STRANDED COPPER WIRE. GROUND WIRES BELOW GRADE SHALL BE #2 BARE TINNED SOLID COPPER WIRE UNLESS OTHERWISE NOTED.
3. GROUNDING CONNECTIONS SHALL BE EXOTHERMIC ("CADWELDS") TO GROUND RODS, GROUND RING WIRE AND GATE POSTS UNLESS NOTED OTHERWISE. CLEAN SURFACES TO SHINY METAL. WHERE GROUND WIRES ARE CADWELDED TO GALVANIZED SURFACES, SPRAY CADWELD WITH GALVANIZING PAINT.
4. GROUNDING CONNECTIONS TO GROUND BARS ARE TO BE TWO-HOLE STAINLESS STEEL MECHANICAL CONNECTORS WITH STAINLESS STEEL HARDWARE (INCLUDING SCREW SET.) CLEAN GROUND BAR TO SHINY METAL. AFTER MECHANICAL CONNECTION, TREAT WITH PROTECTIVE ANTIOXIDIZATION COATING.
5. GROUND HYBRIFLEX CABLE SHIELDS AT BOTH ENDS WITH MANUFACTURER'S GROUNDING KITS.
6. ROUTE GROUNDING CONDUCTORS ALONG THE SHORTEST AND STRAIGHTEST PATH POSSIBLE. BEND GROUNDING LEADS WITH A MINIMUM 8" RADIUS.
7. PROVIDE HEAT SHRINK ON ALL GROUNDS AT GROUND LUG TERMINATION. PRIOR TO INSTALLING LUGS ON GROUND WIRES, APPLY THOMAS & BETTS KOPR-SHIELD (TM OF JET LUBE INC.). PRIOR TO BOLTING GROUND WIRE LUGS TO GROUND BARS, APPLY KOPR-SHIELD OR EQUAL.
8. WHERE BARE COPPER GROUND WIRES ARE ROUTED FROM ANY CONNECTION ABOVE GRADE TO GROUND RING, INSTALL WIRE IN 3/4" PVC SLEEVE, FROM 1'-0" BELOW GRADE AND SEAL TOP WITH SILICONE MATERIAL.

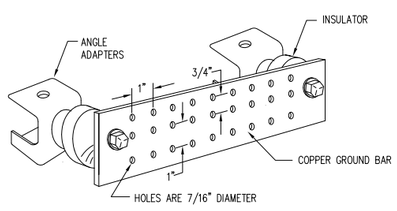

LEGEND

1. COPPER GROUND BAR, MANUFACTURED BY HARGER
2. GROUND BARS SHALL BE CAT. NO. GBIA-14416-J
   GBIA INDICATES GROUND BAR INCLUDING ANGLE ADAPTERS AND INSULATORS
   14416 INDICATES DIMENSIONS OF 1/4" THICK X 4" HIGH X 16" LONG
   J INDICATES FACTORY-DRILLED HOLE PATTERN SHOWN ABOVE
3. SECURE GROUND BAR TO UNDERSIDE OF PLATFORM GRATING

SECTOR GROUND BAR DETAIL

SCALE: N.T.S.

2 / E-2

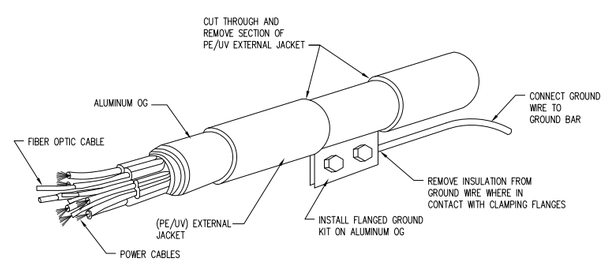

NOTES:

1. CLAMP #6 GROUND WIRE BETWEEN FLANGES AND FORM BOND WITH COMPRESSION HARDWARE PROVIDED WITH KIT.
2. FOLLOWING INSTALLATION OF GROUND KIT, WATERPROOF ASSEMBLY WITH WATERPROOFING KIT AND TAPE.

HYBRIFLEX GROUNDING KIT DETAIL

SCALE: N.T.S.

3 / E-2

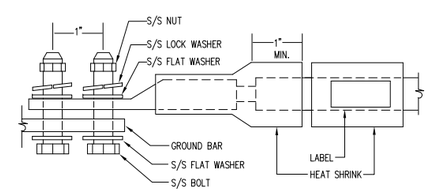

LUG NOTES:

1. ALL HARDWARE IS 18-8 STAINLESS STEEL INCLUDING LOCK WASHERS.
2. ALL HARDWARE SHALL BE S/S 3/8-INCH DIAMETER OR LARGER.
3. FOR GROUND BOND TO STEEL ONLY: INSERT A DRAGON-TOOTH WASHER BETWEEN LUG AND STEEL AND COAT ALL SURFACES WITH ANTI-OXIDIZATION COMPOUND PRIOR TO MATING.

LUG DETAIL

SCALE: NOT TO SCALE

4 / E-2

entrex communication services, inc.
6600 Rockledge Drive, Suite 550
Bethesda, MD 20817
Phone: (202)408-0960
Fax: (202)408-0961

SUBMITTALS

DATE	DESCRIPTION	REV.
10-09-18	CONSTRUCTION REVIEW	
10-29-18	CONSTRUCTION REVIEW	

SEAL:

Sprint
8391 SPRINT PARKWAY
OVERLAND PARK, KANSAS 66251

PROJECT NO: 1015.920
DESIGNER: M.A.
ENGINEER: A.S.

SCALE: AS SHOWN

WA54XC512
PEPCO TOWER 163S
0 ASHTON ROAD
ASHTON, MD 20861

(A/K/A : 1300 ASHTON ROAD ASHTON, MD 20861)

TITLE:

GROUNDING NOTES AND DETAILS

SHEET NUMBER:

E-2

THESE OUTLINE SPECIFICATIONS IN CONJUNCTION WITH THE SPRINT STANDARD CONSTRUCTION SPECIFICATIONS. INCLUDING CONTRACT DOCUMENTS AND THE CONSTRUCTION DRAWINGS DESCRIBE THE WORK TO BE PERFORMED BY THE CONTRACTOR.

SECTION 01 100 - SCOPE OF WORK

THE WORK:

SHALL COMPLY WITH APPLICABLE NATIONAL CODES AND STANDARDS LATEST EDITION, AND PORTIONS THEREOF.

PRECEDENCE:

SHOULD CONFLICTS OCCUR BETWEEN THE STANDARD CONSTRUCTION SPECIFICATIONS FOR WIRELESS SITES INCLUDING THE STANDARD CONSTRUCTION DETAILS FOR WIRELESS SITES AND THE CONSTRUCTION DRAWINGS, INFORMATION ON THE CONSTRUCTION DRAWINGS SHALL TAKE PRECEDENCE.

SITE FAMILIARITY:

CONTRACTOR SHALL BE RESPONSIBLE FOR FAMILIARIZING HIMSELF WITH ALL CONTRACT DOCUMENTS. FIELD CONDITIONS AND DIMENSIONS PRIOR TO PROCEEDING WITH CONSTRUCTION.

ON-SITE SUPERVISION:

THE CONTRACTOR SHALL SUPERVISE AND DIRECT THE WORK AND SHALL BE RESPONSIBLE FOR CONSTRUCTION MEANS. METHODS. TECHNIQUES. SEQUENCES. AND PROCEDURES IN ACCORDANCE WITH THE CONTRACT DOCUMENTS.

DRAWINGS. SPECIFICATIONS AND DETAILS REQUIRED AT JOB SITE:

THE CONSTRUCTION CONTRACTOR SHALL MAINTAIN A FULL SET OF THE CONSTRUCTION DRAWINGS AT THE JOB SITE FROM MOBILIZATION THROUGH CONSTRUCTION COMPLETION.

A. DETAILED ARE INTENDED TO SHOW DESIGN INTENT. PROVIDE ALL MATERIALS AND LABOR AS REQUIRED TO PROVIDE A COMPLETE AND FUNCTIONING SYSTEM. MODIFICATIONS MAY BE REQUIRED TO SUIT JOB DIMENSIONS OR CONDITIONS, AND SUCH MODIFICATIONS SHALL BE INCLUDED AS PART OF THE WORK.

B. CONTRACTOR SHALL NOTIFY SPRINT CONSTRUCTION MANAGER OF ANY VARIATIONS SURFACES UNLESS NOTED OTHERWISE, MODIFICATIONS MAY BE REQUIRED TO SUIT JOB DIMENSIONS OR CONDITIONS. AND SUCH MODIFICATIONS SHALL BE INCLUDED AS PART OF THE WORK.

C. MARK THE FIELD SET OF DRAWINGS IN RED, DOCUMENTING ANY CHANGES FROM THE CONSTRUCTION DOCUMENTS.

METHODS OF PROCEDURE (MOPS) FOR CONSTRUCTION:

CONTRACTOR SHALL PERFORM WORK AS DESCRIBED:

A. COAX COLOR CODING SWEEPS AND FIBER TESTING TS-0200 AND EL-0568.

B. CABLE LABELING EN-2012-00.

C. APPLICABLE INSTALLATION MOPS IDENTIFIED ELSEWHERE IN THE CONTRACT DOCUMENTS.

SECTION 01 200 - COMPANY FURNISHED MATERIAL AND EQUIPMENT:

COMPANY FURNISHED MATERIAL AND EQUIPMENT IS IDENTIFIED ON THE RF DATA SHEET IN THE CONSTRUCTION DRAWINGS.

CONTRACTOR IS RESPONSIBLE FOR SPRINT PROVIDED MATERIAL AND EQUIPMENT TO ENSURE IT IS PROTECTED AND HANDLED PROPERLY THROUGHOUT THE CONSTRUCTION DURATION.

CONTRACTOR IS RESPONSIBLE FOR RECEIPT OF SPRINT FURNISHED EQUIPMENT AT CELL SITE OR CONTRACTORS LOCATION. CONTRACTOR TO COMPLETE SHIPPING AND RECEIPT DOCUMENTATION IN ACCORDANCE WITH COMPANY PRACTICE.

SECTION 01 300 - CELL SITE CONSTRUCTION:

NOTICE TO PROCEED:

NO WORK SHALL COMMENCE PRIOR TO COMPANY'S WRITTEN NOTICE TO PROCEED AND THE ISSUANCE OF WORK ORDER.

SITE CLEANLINESS:

CONTRACTOR SHALL KEEP THE SITE FREE FROM ACCUMULATING WASTE MATERIAL, DEBRIS, AND TRASH. AT THE COMPLETION OF THE WORK, CONTRACTOR SHALL REMOVE FROM THE SITE ALL REMAINING RUBBISH, IMPLEMENTS, TEMPORARY FACILITIES, AND SURPLUS MATERIALS.

SECTION 01 400 - SUBMITTALS & TESTS:

ALTERNATES:

AT THE COMPANY'S REQUEST, ANY ALTERNATIVES TO THE MATERIALS OR METHODS SPECIFIED SHALL BE SUBMITTED TO SPRINTS CONSTRUCTION MANAGER FOR APPROVAL, SPRINT WILL REVIEW AND APPROVE ONLY THOSE REQUESTS MADE IN WRITING, NO VERBAL APPROVALS WILL BE CONSIDERED.

TESTS AND INSPECTIONS

A. THE CONTRACTOR SHALL BE RESPONSIBLE FOR ALL CONSTRUCTION TESTS, INSPECTIONS AND PROJECT DOCUMENTATION.

B. CONTRACTOR SHALL ACCOMPLISH TESTING INCLUDING BUT NOT LIMITED TO THE FOLLOWING:

1. COAX SWEEPS AND FIBER TESTS PER LATEST VERSION OF TS-0200 ANTENNA LINE ACCEPTANCE STANDARDS.
2. AGL, AZIMUTH AND DOWN TILT PROVIDE AN AUTOMATED REPORT UPLOADED TO SITERRA USING A COMMERCIAL MADE-FOR THE PURPOSE ELECTRONIC ANTENNA ALIGNMENT TOOL (AAT). INSTALLED AZIMUTH, CENTERLINE AND DOWN TILT T MUST CONFORM WITH RF CONFIGURATION DATA.
3. CONTRACTOR SHALL BE RESPONSIBLE FOR ANY AND ALL CORRECTIONS TO ANY WORK IDENTIFIED AS UNACCEPTABLE IN SITE INSPECTION ACTIVITIES AND/OR AS A RESULT OF TESTING.
4. ALL TESTING REQUIRED BY APPLICABLE INSTALLATION MOPS.

C. REQUIRED CLOSE OUT DOCUMENTATION INCLUDES, BUT IS NOT LIMITED TO THE FOLLOWING:

1. AZIMUTH, DOWN TILT T, AGL FROM SUNSIGHT INSTRUMENTS – ANTENNA ALIGN ALIGNMENT TOOL (AAT).
2. SWEEP AND FIBER TESTS.
3. SCALEABLE BAR CODE PHOTOGRAPHS OF TOWER TOP AND INACCESSIBLE SERIALIZED EQUIPMENT.
4. ALL AVAILABLE JURISDICTIONAL PERMIT AND OCCUPANCY INFORMATION.
5. PDF SCAN OF RED LINES PRODUCED IN FIELD.
6. A PDF SCAN OF RED LINE MARKUPS SUITABLE FOR USE IN ELECTRONIC AS-BUILT DRAWING PRODUCTION.
7. LIEN WAIVERS.
8. FINAL PAYMENT APPLICATION.
9. REQUIRED FINAL CONSTRUCTION PHOTOS.
10. CONSTRUCTION AND COMMISSIONING CHECKLIST COMPLETE WITH NO DEFICIENT ITEMS.
11. APPLICABLE POST NTP TASKS INCLUDING DOCUMENT UPLOADS COMPLETED IN SITERRA (SPRINTS DOCUMENT REPOSITORY OF RECORD).
12. CLOSE OUT PHOTOGRAPHS AND CLOSE OUT CHECKLIST: SPRINT WILL PROVIDE. SEPARATE GUIDANCE.

SECTION 01 700 - ANTENNA ASSEMBLY, REMOTE RADIO UNITS AND CABLE INSTALLATION:

SUMMARY:

THIS SECTION SPECIFIES INSTALLATION OF ANTENNAS, RRU'S, AND CABLE EQUIPMENT. INSTALLATION AND TESTING OF COAXIAL FIBER CABLE.

ANTENNAS AND RRU'S:

THE NUMBER AND TYPE OF ANTENNAS AND RRU'S TO BE INSTALLED IS DETAILED ON THE CONSTRUCTION DRAWINGS.

HYBRID CABLE:

HYBRID CABLE WILL BE DC/FIBER AND FURNISHED FOR INSTALLATION AT EACH SITE, CABLE SHALL BE INSTALLED PER THE CONSTRUCTION DRAWINGS AND THE APPLICABLE MANUFACTURER'S REQUIREMENTS.

JUMPERS AND CONNECTORS:

FURNISH AND INSTALL ½ INCH COAX JUMPER CABLES BETWEEN THE RRU'S AND ANTENNAS, JUMPERS SHALL BE TYPE LDF 4. FLC 12-50, CR 540 OR FXL 540. SUPER-FLEX CABLES ARE NOT ACCEPTABLE. JUMPERS BETWEEN THE RRU'S AND ANTENNAS OR TOWER TOP AMPLIFIERS SHALL CONSIST OF 1/2 INCH FOAM DIELECTRIC, OUTDOOR RATED COAXIAL CABLE, MIN LENGTH FOR JUMPER SHALL BE 10'-0".

REMOTE ELECTRICAL TILT (RET) CABLES:

MISCELLANEOUS:

INSTALL SPLITTERS, COMBINERS, FILTERS PER RF DATA SHEET FURNISHED BY SPRINT.

ANTENNA INSTALLATION:

THE CONTRACTOR SHALL ASSEMBLE ALL ANTENNAS ON SITE IN ACCORDANCE WITH THE INSTRUCTIONS SUPPLIED BY THE MANUFACTURER. ANTENNA HEIGHT, AZIMUTH, AND FEED ORIENTATION INFORMATION SHALL BE A DESIGNATED ON THE CONSTRUCTION DRAWINGS.

A. THE CONTRACTOR SHALL POSITION THE ANTENNA ON TOWER PIPE MOUNTS SO THAT THE BOTTOM STRUT IS LEVEL, THE PIPE MOUNTS SHALL BE PLUMB TO WITHIN 1 DEGREE.

B. ANTENNA MOUNTING REQUIREMENTS: PROVIDE ANTENNA MOUNTING HARDWARE AS INDICATED ON THE DRAWINGS.

HYBRID CABLE INSTALLATION:

A. THE CONTRACTOR SHALL ROUTE. TEST. AND INSTALL ALL CABLES AS INDICATED ON THE CONSTRUCTION DRAWINGS AND IN ACCORDANCE WITH THE MANUFACTURER'S RECOMMENDATIONS.

B. THE INSTALLED RADIUS OF THE CABLES SHALL NOT BE LESS THAN THE MANUFACTURER'S SPECIFICATIONS FOR BENDING RADIUS.

C. EXTREME CARE SHALL BE TAKEN TO AVOID DAMAGE TO THE CABLES DURING HANDLING AND INSTALLATION.

1. FASTENING MAIN HYBRID CABLES: ALL CABLES SHALL BE INSTALLED INSIDE MONOPOLE WITH CABLE SUPPORT GRIPS AS REQUIRED BY THE MANUFACTURER.

2. FASTENING INDIVIDUAL FIBER AND DC CABLES ABOVE BREAKOUT ENCLOSURE (MEDUSA), WITHIN THE MMBTS CABINET AND ANY INTERMEDIATE DISTRIBUTION BOXES:

a. FIBER I SUPPORT FIBER BUNDLES USING 1/2" VELCRO STRAPS OF THE REQUIRED LENGTH @ 18" OC. STRAPS SHALL BE UV, OIL AND WATER RESISTANT AND SUITABLE FOR INDUSTRIAL INSTALLATIONS AS MANUFACTURED BY TEXTOL OR APPROVED EQUAL.

b. DC: SUPPORT DC BUNDLES WITH ZIP TIES OF THE ADEQUATE LENGTH, ZIP TIES TO BE UV STABILIZED, BLACK NYLON, WITH TENSILE STRENGTH AT 12,000 PSI AS MANUFACTURED BY NELCO PRODUCTS OR EQUAL.

3. FASTENING JUMPERS: SECURE JUMPERS TO THE SIDE ARMS OR HEAD FRAMES USING STAINLESS STEEL TIE WRAPS OR STAINLESS STEEL BUTTERFLY CLIPS.

4. CABLE INSTALLATION:

a. INSPECT CABLE PRIOR TO USE FOR SHIPPING DAMAGE, NOTIFY THE CONSTRUCTION MANAGER.

b. CABLE ROUTING: CABLE INSTALLATION SHALL BE PLANNED TO ENSURE THAT THE LINES WILL BE PROPERLY ROUTED IN THE CABLE ENVELOPE AS INDICATED ON THE DRAWINGS. AVOID TWISTING AND CROSSOVERS.

c. HOIST CABLE USING PROPER HOISTING GRIPS. DO NOT EXCEED MANUFACTURERS' RECOMMENDED MAXIMUM BEND RADIUS.

5. GROUNDING OF TRANSMISSION LINES: ALL TRANSMISSION LINES SHALL BE GROUNDED AS INDICATED ON DRAWINGS.

6. HYBRID CABLE COLOR CODING: ALL COLOR CODING SHALL BE AS REQUIRED IN CURRENT VERSION OF TS0200.

7. HYBRID CABLE LABELING: INDIVIDUAL HYBRID AND DC BUNDLES SHALL BE LABELED ALPHA-NUMERICALLY ACCORDING TO SPRINT CELL SITE ENGINEERING NOTICE – EN 2012-001, REV 1.

entrex
communication services, inc.

6600 Rockledge Drive. Suite 550
Bethesda, MD 20817
Phone: (202)408-0960
Fax: (202)408-0961

SUBMITTALS

DATE	DESCRIPTION	REV.
10-09-18	CONSTRUCTION REVIEW	
10-29-18	CONSTRUCTION REVIEW	

SEAL:

Sprint
6391 SPRINT PARKWAY
OVERLAND PARK, KANSAS 66251

PROJECT NO:	1015.920
DESIGNER:	M.A.
ENGINEER:	M.M.

SCALE: AS SHOWN

WA54XC512
PEPCO TOWER 163S
0 ASHTON ROAD
ASHTON, MD 20861

(A/K/A : 1300 ASHTON ROAD ASHTON, MD 20861)

TITLE:

SPECIFICATIONS

SHEET NUMBER:

SP-1

WEATHERPROOFING EXTERIOR CONNECTORS AND HYBRID CABLE GROUND KITS:

A. ALL FIBER L COAX CONNECTORS AND GROUND KITS SHALL BE WEATHERPROOFED.

WEATHERPROOF USING ONE OF THE FOLLOWING METHODS. ALL INSTALLATIONS MUST BE PERFORMED IN ACCORDANCE WITH THE MANUFACTURER'S RECOMMENDATIONS AND INDUSTRY BEST PRACTICES.

1. COLD SHRINK: ENCOMPASS CONNECTOR IN COLD SHRINK TUBING AND PROVIDE A DOUBLE WRAP OF 2" ELECTRICAL TAPE EXTENDING 2" BEYOND TUBING. PROVIDE 3M COLD SHRINK CXS SERIES DR EQUAL.

2. SELF-AMALGAMATING TAPE: CLEAN SURFACES, APPLY A DOUBLE WRAP OF SELF-AMALGAMATING TAPE 2" BEYOND CONNECTOR. APPLY A SECOND WRAP OF SELF-AMALGAMATING TAPE IN OPPOSITE DIRECTION. APPLY DOUBLE 'WRAP OF 2" WIDE ELECTRICAL TAPE EXTENDING 2" BEYOND THE SELF -AMALGAMATING TAPE.

3. 3M SLIM LOCK CLOSURE 716: SUBSTITUTIONS WILL NOT BE ALLOWED.

4. OPEN FLAME ON JOB SITE IS NOT ACCEPTABLE.

SECTION 11 800 - INSTALLATION OF MULTIMODAL BASE STATIONS (MMBS) AND RELATED EQUIPMENT:

SUMMARY:

A. THIS SECTION SPECIFIES MMBS CABINETS, POWER CABINETS, AND INTERNAL EQUIPMENT INCLUDING BUT NOT LIMITED TO RECTIFIERS, POWER DISTRIBUTION UNITS, BASE BAND UNITS, SURGE ARRESTORS, BATTERIES, AND SIMILAR EQUIPMENT FURNISHED BY THE COMPANY FOR INSTALLATION BY THE CONTRACTOR (OFCI).

B. CONTRACTOR SHALL PROVIDE AND INSTALL ALL MISCELLANEOUS MATERIALS AND PROVIDE ALL LABOR REQUIRED FOR INSTALLATION EQUIPMENT IN EXISTING CABINET DR NEW CABINET AS SHOWN ON DRAWINGS AND AS REQUIRED BY THE APPLICABLE INSTALLATION MOPS.

C. COMPLY WITH MANUFACTURERS INSTALLATION AND START-UP REQUIREMENTS.

DC CIRCUIT BREAKER LABELING:

A. NEW DC CIRCUIT IS REQUIRED IN MMBTS CABINET AND SHALL BE CLEARLY IDENTIFIED AS TO RRU BEING SERVICED.

SECTION 26 100 - BASIC ELECTRICAL REQUIREMENTS:

SUMMARY:

THIS SECTION SPECIFIES BASIC ELECTRICAL REQUIREMENTS FDR SYSTEMS AND COMPONENTS.

QUALITY ASSURANCE:

A. ALL EQUIPMENT FURNISHED UNDER DIVISION 26 SHALL CARRY UL LABELS AND LISTINGS WHERE SUCH LABELS AND LISTINGS ARE AVAILABLE IN THE INDUSTRY.

B. MANUFACTURERS OF EQUIPMENT SHALL HAVE A MINIMUM OF THREE YEARS EXPERIENCE WITH THEIR EQUIPMENT INSTALLED AND OPERATING IN THE FIELD IN A USE SIMILAR TO THE PROPOSED USE FOR THIS PROJECT.

C. MATERIALS AND EQUIPMENT: ALL MATERIALS AND EQUIPMENT SPECIFIED IN DIVISION 26 OF THE SAME TYPE SHALL BE OF THE SAME MANUFACTURER AND SHALL BE NEW, OF THE BEST QUALITY AND DESIGN, AND FREE FROM DEFECTS.

SUPPORTING DEVICES:

A ALL EQUIPMENT FURNISHED UNDER DIVISION 26 SHALL CARRY UL LABELS AND LISTINGS WHERE SUCH LABELS AND LISTINGS ARE AVAILABLE IN THE INDUSTRY.

B. MANUFACTURERS OF EQUIPMENT SHALL HAVE A MINIMUM OF THREE YEARS EXPERIENCE WITH THEIR EQUIPMENT INSTALLED AND OPERATING IN THE FIELD IN A USE SIMILAR TO THE PROPOSED USE FOR THIS PROJECT.

C. MATERIALS AND EQUIPMENT:
ALL MATERIALS AND EQUIPMENT SPECIFIED IN DIVISION 26 OF THE SAME TYPE SHALL BE OF THE SAME MANUFACTURER AND SHALL BE NEW, OF THE BEST QUALITY AND DESIGN, AND FREE FROM DEFECTS.

SUPPORTING DEVICES:

A. MANUFACTURED STRUCTURAL SUPPORT MATERIALS: SUBJECT TO COMPLIANCE WITH REQUIREMENTS, PROVIDE PRODUCTS BY THE FOLLOWING:

1. ALLIED TUBE AND CONDUIT.

2. B-LINE SYSTEMS.

3. UNISTRUT DIVERSIFIED PRODUCTS.

4. THOMAS & BETTS.

B. FASTENERS: TYPES, MATERIALS, AND CONSTRUCTION FEATURES AS FOLLOWS:

1. EXPANSION ANCHORS: CARBON STEEL WEDGE OR SLEEVE TYPE.

2. POWER-DRIVEN THREADED STUDS: HEAT-TREATED STEEL, DESIGNED SPECIFICALLY FOR THE INTENDED SERVICE.

3. FASTEN BY MEANS OF WOOD SCREWS ON WOOD.

4. TOGGLE BOLTS ON HOLLOW MASONRY UNITS.

5. CONCRETE INSERTS OR EXPANSION BOLTS ON CONCRETE OR SOLID MASONRY.

6. MACHINE SCREWS, WELDED THREADED STUDS, OR SPRING-TENSION CLAMPS ON STEEL.

7. EXPLOSIVE DEVICES FOR ATTACHING HANGERS TO STRUCTURE SHALL NOT BE PERMITTED.

8. DO NOT WELD CONDUIT, PIPE STRAPS, OR ITEMS OTHER THAN THREADED STUDS TO STEEL STRUCTURES.

9. IN PARTITIONS OF LIGHT STEEL CONSTRUCTION, USE SHEET METAL SCREWS.

SUPPORTING DEVICES:

A. INSTALL SUPPORTING DEVICES TO FASTEN ELECTRICAL COMPONENTS SECURELY AND PERMANENTLY IN ACCORDANCE WITH NEC.

B. COORDINATE WITH THE BUILDING STRUCTURAL SYSTEM AND WITH OTHER TRADES.

C. UNLESS OTHERWISE INDICATED ON THE DRAWINGS, FASTEN ELECTRICAL ITEMS AND THEIR SUPPORTING HARDWARE SECURELY TO THE STRUCTURE IN ACCORDANCE WITH THE FOLLOWING:

D. ENSURE THAT THE LOAD APPLIED BY ANY FASTENER DOES NOT EXCEED 25 PERCENT OF THE PROOF TEST LOAD.

E. USE VIBRATION AND SHOCK-RESISTANT FASTENERS FOR ATTACHMENTS TO CONCRETE SLABS.

ELECTRICAL IDENTIFICATION:

A. UPDATE AND PROVIDE TYPED CIRCUIT BREAKER SCHEDULES IN THE MOUNTING BRACKET, INSIDE DOORS OF AC PANEL BOARDS WITH ANY CHANGES MADE TO THE AC SYSTEM.

B. BRANCH CIRCUITS FEEDING AVIATION OBSTRUCTION LIGHTING EQUIPMENT SHALL BE CLEARLY IDENTIFIED AS SUCH AT THE BRANCH CIRCUIT PANELBOARD.

SECTION 26 200 - ELECTRICAL MATERIALS AND EQUIPMENT CONDUIT:

A. RIGID GALVANIZED STEEL (RGS) CONDUIT SHALL BE USED FOR EXTERIOR LOCATIONS ABOVE GROUND AND IN UNFINISHED INTERIOR LOCATIONS AND FOR ENCASED RUNS IN CONCRETE. RIGID CONDUIT AND FITTINGS SHALL BE STEEL, COATED WITH ZINC EXTERIOR AND INTERIOR BY THE HOT DIP GALVANIZING PROCESS. CONDUIT SHALL BE PRODUCED TO ANSI SPECIFICATIONS C80.1, FEDERAL SPECIFICATION WW-C-581 AND SHALL BE LISTED WITH THE UNDERWRITERS' LABORATORIES. FITTINGS SHALL BE THREADED - SET SCREW OR COMPRESSION FITTINGS WILL NOT BE ACCEPTABLE. RGS CONDUITS SHALL BE MANUFACTURED BY ALLIED, REPUBLIC OR WHEATLAND.

B. UNDERGROUND CONDUIT IN CONCRETE SHALL BE POLYVINYL CHLORIDE (PVC) SUITABLE FOR DIRECT BURIAL AS APPLICABLE. JOINTS SHALL BE BELLED, AND FLUSH SOLVENT WELDED IN ACCORDANCE WITH MANUFACTURER'S INSTRUCTIONS. CONDUIT SHALL BE CARLON ELECTRICAL PRODUCTS OR APPROVED EQUAL.

C. TRANSITIONS BETWEEN PVC AND RIGID (RGS) SHALL BE MADE WITH PVC COATED METALLIC LONG SWEEP RADIUS ELBOWS.

D. EMT OR RIGID GALVANIZED STEEL CONDUIT MAY BE USED IN FINISHED SPACES CONCEALED IN WALLS AND CEILINGS. EMT SHALL BE MILD STEEL, ELECTRICALLY WELDED. ELECTRO-GALVANIZED OR HOT-DIPPED GALVANIZED AND PRODUCED TO ANSI SPECIFICATION C80.3, FEDERAL SPECIFICATION WW-C-563, AND SHALL BE UL LISTED. EMT SHALL BE MANUFACTURED BY ALLIED, REPUBLIC OR WHEATLAND, OR APPROVED EQUAL, FITTINGS SHALL BE METALLIC COMPRESSION. SET SCREW CONNECTIONS SHALL NOT BE ACCEPTABLE,

E. LIQUID TIGHT FLEXIBLE METALLIC CONDUIT SHALL BE USED FOR FINAL CONNECTION TO EQUIPMENT. FITTINGS SHALL BE METALLIC GLAND TYPE COMPRESSION FITTINGS, MAINTAINING THE INTEGRITY OF CONDUIT SYSTEM. SET SCREW CONNECTIONS SHALL NOT BE ACCEPTABLE. MAXIMUM LENGTH OF FLEXIBLE CONDUIT SHALL NOT EXCEED 6-FEET. LFMC SHALL BE PROTECTED AND SUPPORTED AS REQUIRED BY NEC. MANUFACTURERS OF FLEXIBLE CONDUITS SHALL BE CAROL, ANACONDA METAL HOSE OR UNIVERSAL METAL HOSE, OR APPROVED EQUAL.

F. MINIMUM SIZE CONDUIT SHALL BE 3/4 INCH (21MM).

HUBS AND BOXES:

A. AT ENTRANCES TO CABINETS OR OTHER EQUIPMENT NOT HAVING INTEGRAL THREADED HUBS PROVIDE METALLIC THREADED HUBS OF THE SIZE AND CONFIGURATION REQUIRED. HUB SHALL INCLUDE LOCK NUT AND NEOPRENE O-RING SEAL. PROVIDE IMPACT RESISTANT 105 DEGREE C PLASTIC BUSHINGS TO PROTECT CABLE INSULATION.

B. CABLE TERMINATION FITTINGS FOR CONDUIT

1. CABLE TERMINATORS FOR RGS CONDUITS SHALL BE TYPE CRC BY O-Z/GEDNEY OR EQUAL BY ROX TEC.

2. CABLE TERMINATORS FOR LFMC SHALL BE ETCO - CL2075 OR MADE FOR THE PURPOSE PRODUCTS BY ROXTEC.

C. EXTERIOR PULL BOXES AND PULL BOXES IN INTERIOR INDUSTRIAL AREAS SHALL BE PLATED CAST ALLOY, HEAVY DUTY, WEATHERPROOF, DUST PROOF, WITH GASKET, PLATED IRON ALLOY COVER AND STAINLESS STEEL COVER SCREWS, CROUSE -HINDS WAB SERIES OR EQUAL.

D. CONDUIT OUTLET BODIES SHALL BE PLATED CAST ALLOY WITH SIMILAR GASKETED COVERS. OUTLET BODIES SHALL BE OF THE CONFIGURATION AND SIZE SUITABLE FOR THE APPLICATION. PROVIDE CROUSE-HINDS FORM 8 OR EQUAL.

E. MANUFACTURER FOR BOXES AND COVERS SHALL BE HOFFMAN, SQUARE "D", CROUSE-HINDS, COOPER, ADALET, APPLETON, O-Z GEDNEY, RACO, OR APPROVED EQUAL.

SUPPLEMENTAL GROUNDING SYSTEM:

A. FURNISH AND INSTALL A SUPPLEMENTAL GROUNDING SYSTEM TO THE EXTENT INDICATED ON THE DRAWINGS. SUPPORT SYSTEM WITH NON-MAGNETIC STAINLESS STEEL CLIPS WITH RUBBER GROMMETS. GROUNDING CONNECTORS SHALL BE TINNED COPPER WIRE, SIZES AS INDICATED ON THE DRAWINGS. PROVIDE STRANDED OR SOLID BARE OR INSULATED CONDUCTORS EXCEPT AS OTHERWISE NOTED.

B. SUPPLEMENTAL GROUNDING SYSTEM: ALL CONNECTIONS TO BE MADE WITH EXOTHERMIC WELDS, EXCEPT AT EQUIPMENT USE LUGS OR OTHER AVAILABLE GROUNDING MEANS AS REQUIRED BY MANUFACTURER; AT GROUND BARS USE TWO HOLE SPADES WITH NO OX.

C. STOLEN GROUND-BARS: IN THE EVENT OF STOLEN GROUND BARS, CONTACT SPRINT CM FOR REPLACEMENT INSTRUCTION USING THREADED ROD KITS.

EXISTING STRUCTURE:

A. EXISTING EXPOSED WIRING AND ALL EXPOSED OUTLETS, RECEPTACLES, SWITCHES, DEVICES, BOXES, AND OTHER EQUIPMENT THAT ARE NOT TO BE UTILIZED IN THE COMPLETED PROJECT SHALL BE REMOVED OR DE-ENERGIZED AND CAPPED IN THE WALL, CEILING, OR FLOOR SO THAT THEY ARE CONCEALED AND SAFE. WALL, CEILING, OR FLOOR SHALL BE PATCHED TO MATCH THE ADJACENT CONSTRUCTION.

CONDUIT AND CONDUCTOR INSTALLATION:

A. CONDUITS SHALL BE FASTENED SECURELY IN PLACE WITH APPROVED NON-PERFORATED STRAPS AND HANGERS. EXPLOSIVE DEVICES FOR ATTACHING HANGERS TO STRUCTURE WILL NOT BE PERMITTED. CLOSELY FOLLOW THE LINES OF THE STRUCTURE. MAINTAIN CLOSE PROXIMITY TO THE STRUCTURE AND KEEP CONDUITS IN TIGHT ENVELOPES. CHANGES IN DIRECTION TO ROUTE AROUND OBSTACLES SHALL BE MADE WITH CONDUIT OUTLET BODIES. CONDUIT SHALL BE INSTALLED IN A NEAT AND WORKMANLIKE MANNER, PARALLEL AND PERPENDICULAR TO STRUCTURE WALL AND CEILING LINES. ALL CONDUIT SHALL BE FISHED TO CLEAR OBSTRUCTIONS. ENDS OF CONDUITS SHALL BE TEMPORARILY CAPPED TO PREVENT CONCRETE, PLASTER DR DIRT FROM ENTERING. CONDUITS SHALL BE RIGIDLY CLAMPED TO BOXES BY GALVANIZED MALLEABLE IRON BUSHING ON INSIDE AND GALVANIZED MALLEABLE IRON LOCK NUT ON OUTSIDE AND INSIDE.

B. CONDUCTORS SHALL BE PULLED IN ACCORDANCE WITH ACCEPTED GOOD PRACTICE.

entrex
communication services, inc.

6600 Rockledge Drive, Suite 550
Bethesda, MD 20817
Phone: (202)408-0960
Fax: (202)408-0961

SUBMITTALS

DATE	DESCRIPTION	REV.
10-09-18	CONSTRUCTION REVIEW	
10-29-18	CONSTRUCTION REVIEW	

SEAL:

Sprint
6391 SPRINT PARKWAY
OVERLAND PARK, KANSAS 66251

PROJECT NO: 1015.920
DESIGNER: M.A.
ENGINEER: M.M.

SCALE: AS SHOWN

WA54XC512
PEPCO TOWER 163S
0 ASHTON ROAD
ASHTON, MD 20861

(A/K/A : 1300 ASHTON ROAD
ASHTON, MD 20861)

TITLE:

SPECIFICATIONS

SHEET NUMBER:

SP-2

EXISTING 800/1900 MHz INSTALLATION	NEW 2.5 GHz INSTALLATION
A– EXISTING 2" DC POWER (2AWGx2) B– EXISTING 2" FIBER (6 FIBER 7MM) C– EXISTING 1.5" BATTERY ALARM D– EXISTING 2" DC POWER	E– NEW 2" CPRI FIBER (9 FIBER 7MM) F– NEW 4 HYBRIFLEX CABLES

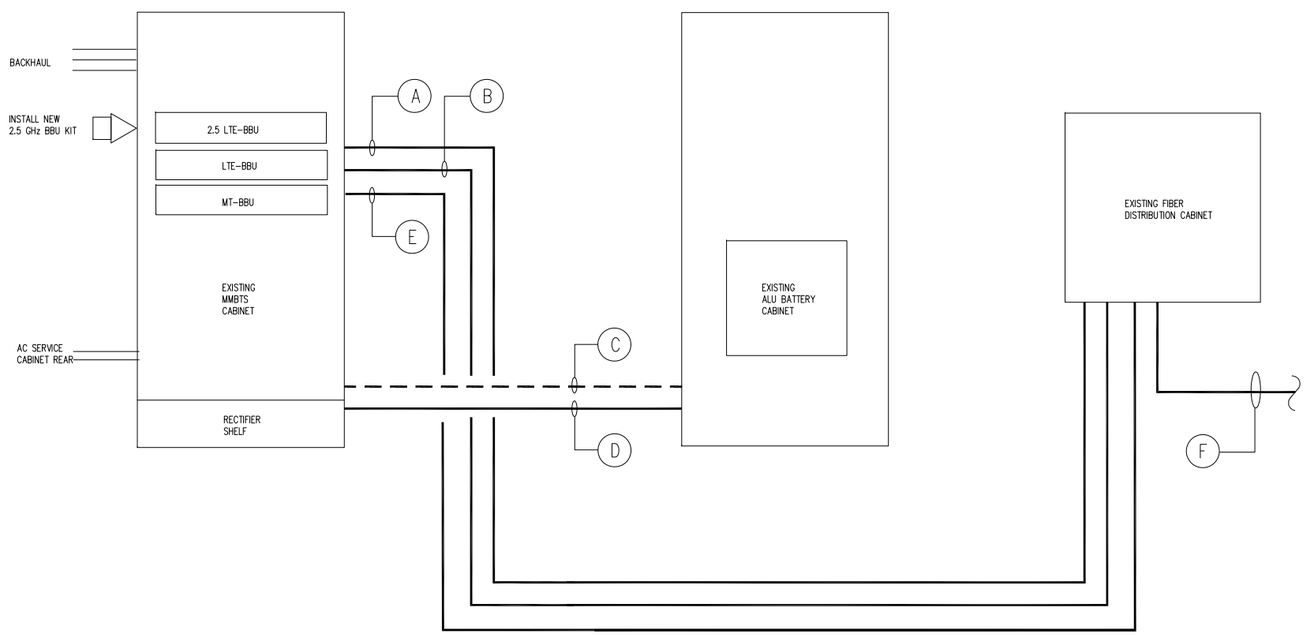

EQUIPMENT CABLING SCHEMATIC (1 / SP-3)
SCALE: N.T.S.

entrex
communication services, inc.

6600 Rockledge Drive, Suite 550
Bethesda, MD 20817
Phone: (202)408-0960
Fax: (202)408-0961

SUBMITTALS

DATE	DESCRIPTION	REV.
10-09-18	CONSTRUCTION REVIEW	
10-29-18	CONSTRUCTION REVIEW	

SEAL:

Sprint
6391 SPRINT PARKWAY
OVERLAND PARK, KANSAS 66251

PROJECT NO: 1015.920
DESIGNER: M.A.
ENGINEER: M.M.
SCALE: AS SHOWN

WA54XC512
PEPCO TOWER 163S
0 ASHTON ROAD
ASHTON, MD 20861

(A/K/A : 1300 ASHTON ROAD ASHTON, MD 20861)

TITLE:

EQUIPMENT CABLING SCHEMATIC

SHEET NUMBER:

SP-3

TECHNOLOGY COLOR CODE	FIRST RING	SECOND RING
800 #1	YELLOW	GREEN
1900 #1	YELLOW	RED
1900 #2	YELLOW	BROWN
1900 #3	YELLOW	BLUE
1900 #4	YELLOW	GREY
800 #1	YELLOW	ORANGE
2500 #1	YELLOW	WHITE
2500 #2	YELLOW	PURPLE

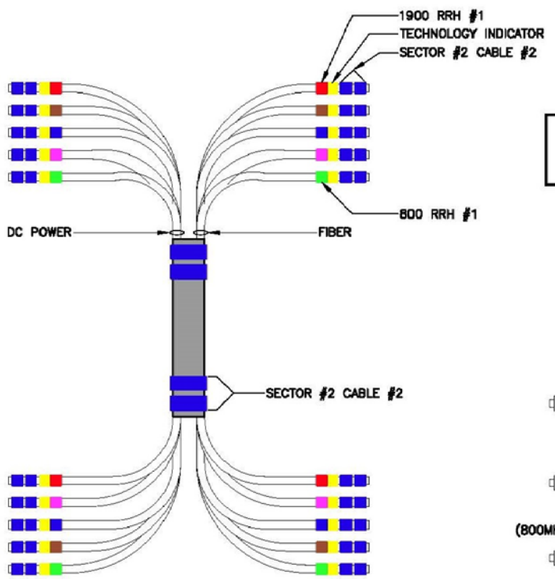

COLOR BANDING AT UPPER TERMINATION TO BE 3" WIDE

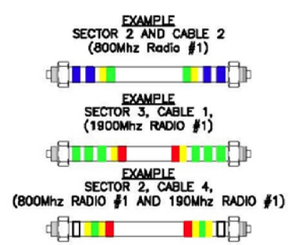

2500MHz RADIO CALIBRATION CABLE COLOR CODE

2500MHz #1 CAL CABLE – SECTOR	CABLE	FIRST RING	SECOND RING	THIRD RING	FOURTH RING	FIFTH RING	SIXTH RING
1 ALPHA	1	YELLOW		YELLOW	WHITE		
2 BETA	2	YELLOW	YELLOW		YELLOW	WHITE	
3 GAMMA	3	YELLOW	YELLOW	YELLOW		YELLOW	WHITE

2500MHz #2 CAL CABLE – SECTOR	CABLE	FIRST RING	SECOND RING	THIRD RING	FOURTH RING	FIFTH RING	SIXTH RING
1 ALPHA	1	YELLOW		YELLOW	PURPLE		
2 BETA	2	YELLOW	YELLOW		YELLOW	PURPLE	
3 GAMMA	3	YELLOW	YELLOW	YELLOW		YELLOW	PURPLE

INFORMATION TAKEN FROM SPRINT'S TECHNICAL SPECIFICATIONS "ANTENNA TRANSMISSION LINE ACCEPTANCE STANDARDS, LATEST VERSION, COPYRIGHT© 2014 SPRINT CORPORATION

2.5 GHz CABLE COLOR CODE DETAILS (1 / SP-4)
SCALE: N.T.S

entrex communication services, inc.
6600 Rockledge Drive, Suite 550
Bethesda, MD 20817
Phone: (202)408-0960
Fax: (202)408-0961

SUBMITTALS

DATE	DESCRIPTION	REV.
10-09-18	CONSTRUCTION REVIEW	
10-29-18	CONSTRUCTION REVIEW	

SEAL:

Sprint
6391 SPRINT PARKWAY
OVERLAND PARK, KANSAS 66251

PROJECT NO: 1015.920
DESIGNER: M.A.
ENGINEER: M.M.
SCALE: AS SHOWN

WA54XC512
PEPCO TOWER 163S
0 ASHTON ROAD
ASHTON, MD 20861
(A/K/A : 1300 ASHTON ROAD
ASHTON, MD 20861)

TITLE:
2.5 GHz CABLE COLOR CODE DETAIL

SHEET NUMBER:
SP-4

BTS to Distribution Box Fiber Connectivity

Alcatel-Lucent	5/17/2014	V6.3

eCCM2-HR

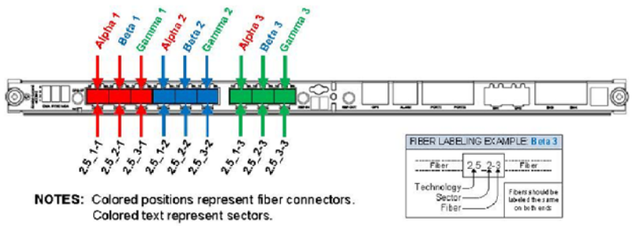

NOTES: Colored positions represent fiber connectors.
Colored text represent sectors.

Distribution Box Fiber Panel

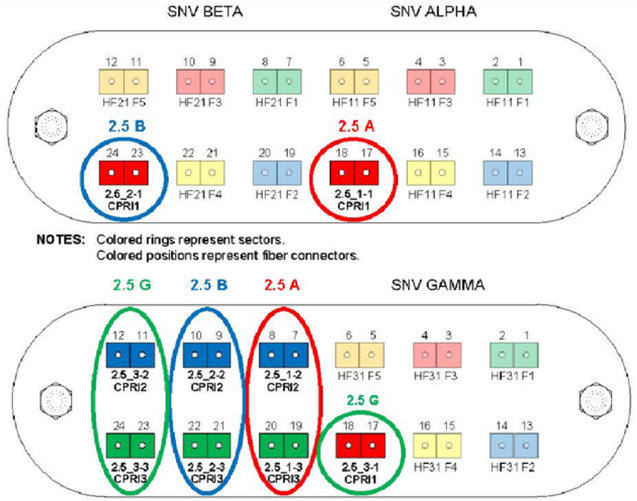

NOTES: Colored rings represent sectors.
Colored positions represent fiber connectors.

NOTES: Image depicts right side of the fiber bulkhead.
Left side connections will use the same position designations.

BTS TO DISTRIBUTION BOX
FIBER CONNECTIVITY
SCALE: N.T.S
1 SP-5

RRH to Distribution Box Fiber Connectivity

Alcatel-Lucent	5/17/2014	V6.3

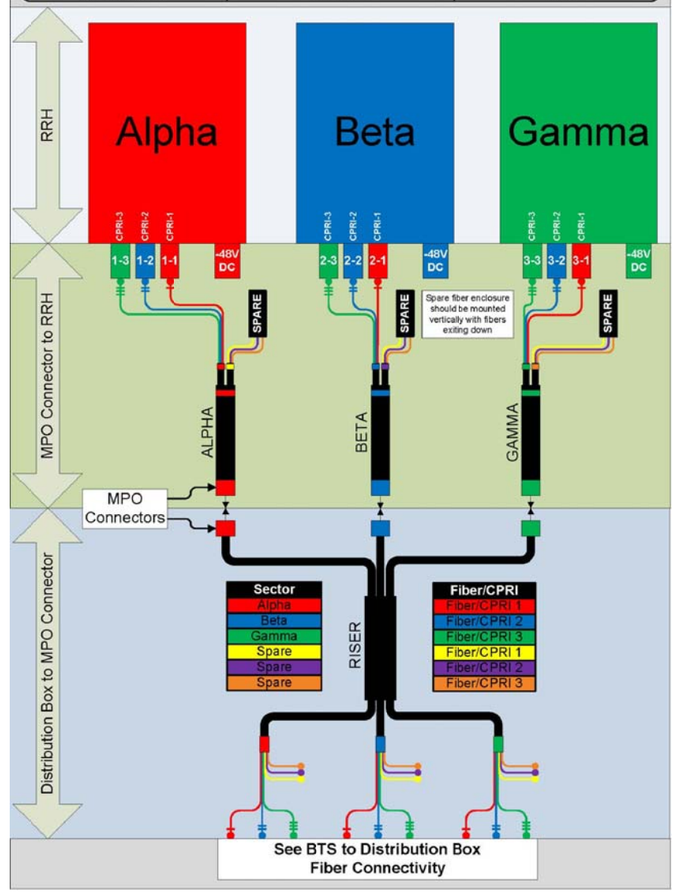

RRH TO DISTRIBUTION BOX
FIBER CONNECTIVITY
SCALE: N.T.S
2 SP-5

8T8R w/ FILTER

Alcatel-Lucent	5/17/2014	V6.3

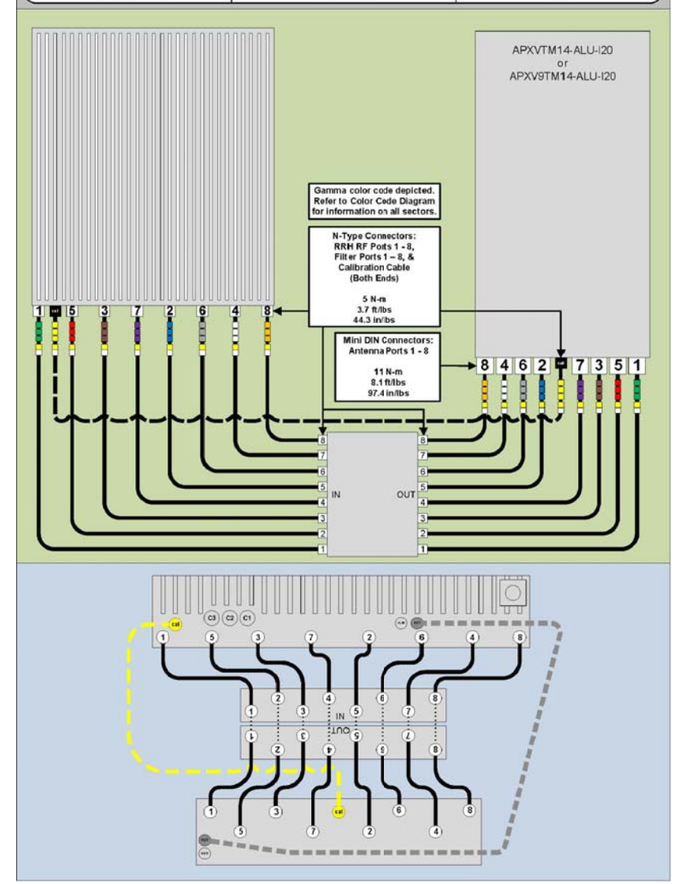

RF CONNECTIVITY
SCALE: N.T.S
3 SP-5

entrex
communication services, inc.
6600 Rockledge Drive, Suite 550
Bethesda, MD 20817
Phone: (202)408-0960
Fax: (202)408-0961

SUBMITTALS

DATE	DESCRIPTION	REV.
10-09-18	CONSTRUCTION REVIEW	
10-29-18	CONSTRUCTION REVIEW	

SEAL:

Sprint
6391 SPRINT PARKWAY
OVERLAND PARK, KANSAS 66251

PROJECT NO:	1015.920
DESIGNER:	M.A.
ENGINEER:	M.M.

SCALE: AS SHOWN

WA54XC512
PEPCO TOWER 163S
0 ASHTON ROAD
ASHTON, MD 20861

(A/K/A : 1300 ASHTON ROAD
ASHTON, MD 20861)

TITLE:

2.5 GHz
CONNECTIVITY
DETAILS

SHEET NUMBER:

SP-5

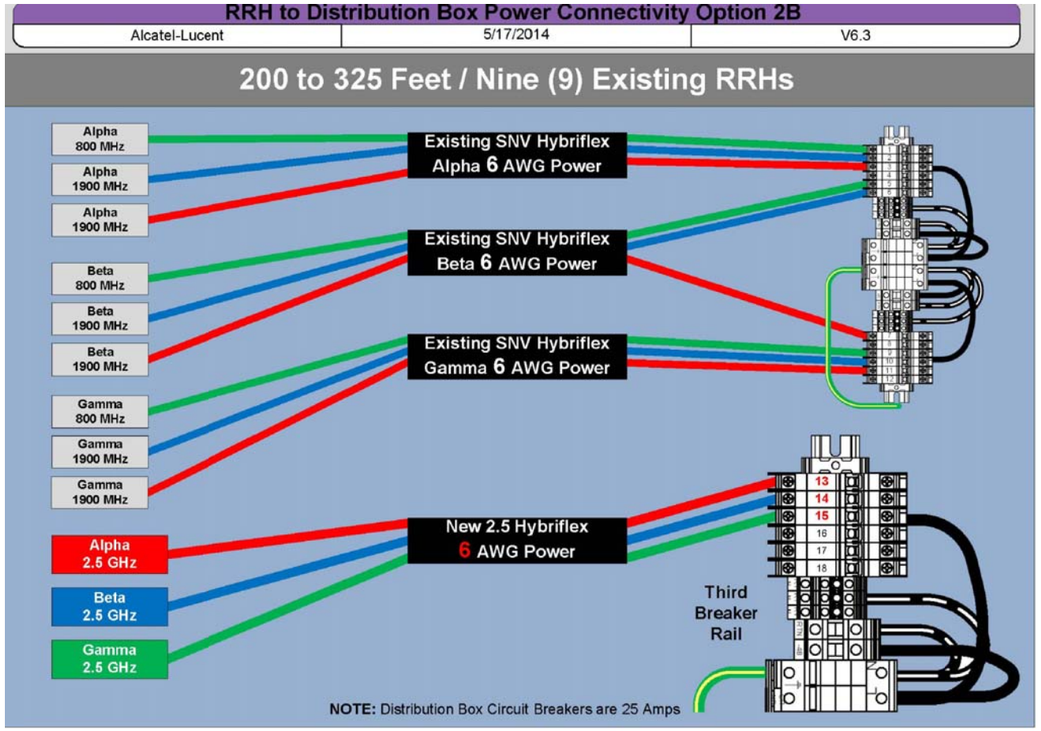

RRH TO DISTRIBUTION BOX POWER CONNECTIVITY (1 / SP-6)
SCALE: N.T.S

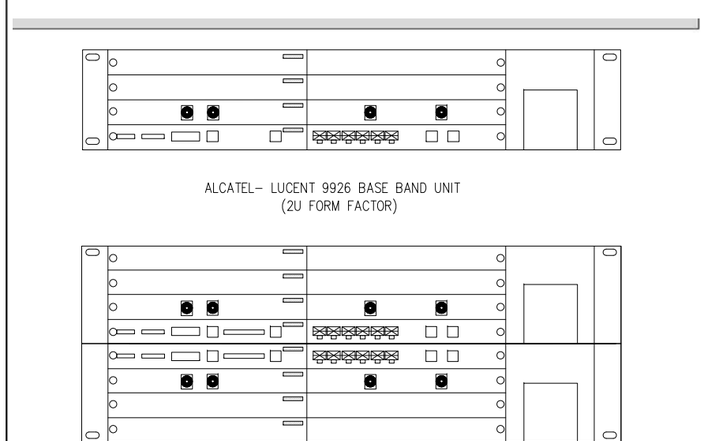

ALCATEL- LUCENT 9926 BASE BAND UNIT
(2U FORM FACTOR)

ALCATEL- LUCENT 9926 BASE BAND UNIT
(4U FORM FACTOR)

2.5 GHz BBU COMPONENT (2 / SP-6)
SCALE: N.T.S.

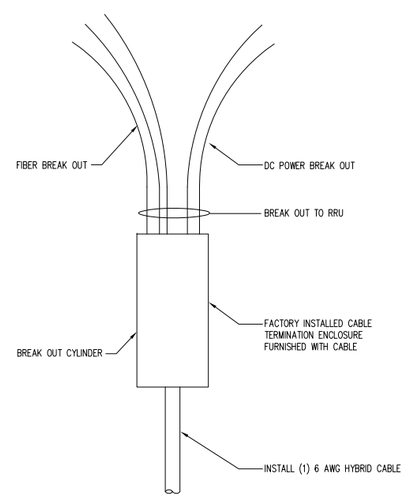

NOTES:

1. IMPORTANT! LINE UP WHITE MARKINGS ON JUMPER AND RISER IP-MPO CONNECTORS ON SLIDE THE RISER CONNECTOR TO THE JUMPER CONNECTOR. PUSH THE WHITE MARK ON THE JUMPER CONNECTOR FLUSH AGAINST THE RED SEAL ON THE RISER CONNECTOR.
2. IMPORTANT! ROTATE THE BAYONET HOUSING CLOCKWISE UNTIL YOU HEAR A CLICK SOUND (MEANS A GOOD CONNECTION IS IN PLACE).

HYBRID BREAKOUT DETAIL (3 / SP-6)
SCALE: N.T.S.

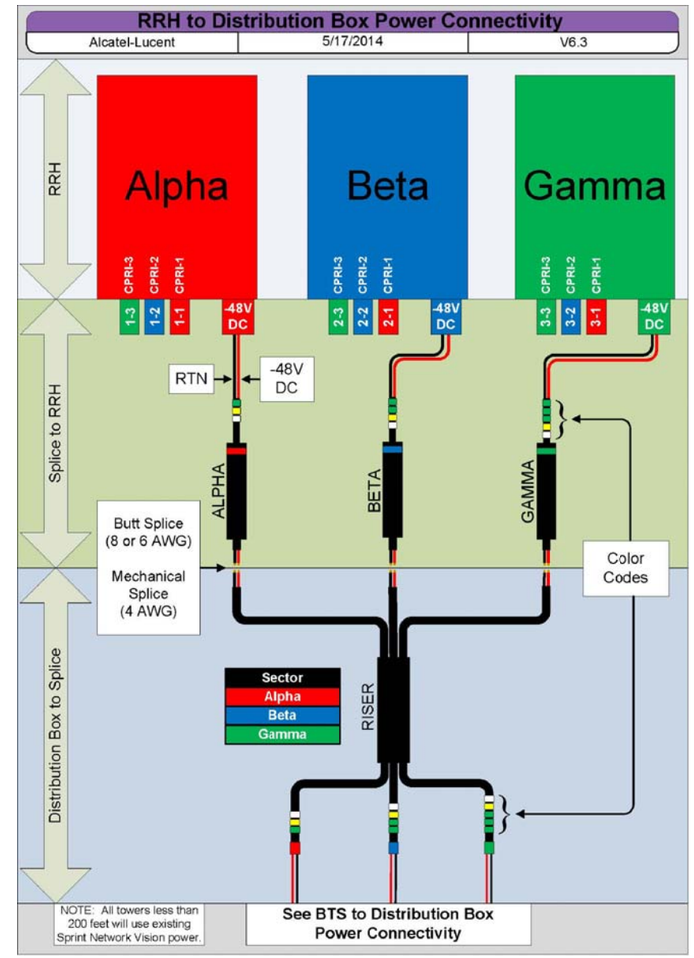

RRH TO DISTRIBUTION BOX POWER CONNECTIVITY (4 / SP-6)
SCALE: N.T.S

entrex communication services, inc.
6600 Rockledge Drive, Suite 550
Bethesda, MD 20817
Phone: (202)408-0960
Fax: (202)408-0961

SUBMITTALS

DATE	DESCRIPTION	REV.
10-09-18	CONSTRUCTION REVIEW	
10-29-18	CONSTRUCTION REVIEW	

SEAL:

Sprint
6391 SPRINT PARKWAY
OVERLAND PARK, KANSAS 66251

PROJECT NO:	1015.920
DESIGNER:	M.A.
ENGINEER:	M.M.

SCALE: AS SHOWN

WA54XC512
PEPCO TOWER 163S
0 ASHTON ROAD
ASHTON, MD 20861

(A/K/A : 1300 ASHTON ROAD ASHTON, MD 20861)

TITLE:

2.5 GHz POWER CONNECTIVITY AND EQUIPMENT DETAILS

SHEET NUMBER:

SP-6

App No: 2018100518

Applicant Name	Sprint			Antenna Compliance	Yes
Application Type	Minor Modificatio	Updated	10/9/2018	Compliance Desc	
Carrier	Sprint/Nextel	6409?	No	Antenna Location	No
				Antenna Loc. Desc.	
Solution Type	Other	Ann. Plan?	Yes	Env. Assessment	
Existing	Existing	Equipment Gvt Us	No	Cat. Excluded?	checked
		Gvt. Use Desc.		Routine Env. Evaluation	

Application Description

Sprint is modifying (removing and adding upgraded Sprint equipment) the existing Fort Worth Tower. Sprint will be removing six (6) Existing antennas and (6) Existing coaxial cables. Sprint will be installing, one (1) new handrail kit, three (3) new 2500MHz antennas, three (3) new 800/1900MHz antennas, six (6) 1900MHz RRHs (three (3) which are being relocated from the ground), six (6) 800MHz RRHs, three (3) 2500MHz RRHs, four (4) new hybriflex cables, three (3) 1900MHz combiners and install grounding.

Site Id	203		
Structure Type	Tower	Zoning	R-C
Address	1000 Ashton Rd (block of), Ashton	Latitude	39.1608333
County Site Name	PEPCO #163-S	Longitude	-76.9838888
Carrier Site Name	PEPCO TOWER 163S	Ground Elevation	417
Site Owner	PEPCO	City	Ashton
		Lease Status	N/A
Structure Owner	PEPCO (Pepco Electrical Power Com	PROW	Yes
Structure Height	143		

Justification

Sprint is modifying (removing and adding upgraded Sprint equipment) the existing Fort Worth Tower.

NearbySites (New Apps Only):

Screeningconsiderations(New Apps Only):

Wednesday, October 10, 2018

11:11:33 AM

App No: 2018100518

Antenna Model	APXVTM14-ALU-120
Frequency	See attached RF frequency chart

RAD Center	142	Max ERP	240	Antenna Dimensions	71.9''x13.8''x8.2''	Quantity	3

Wednesday, October 10, 2018

11:11:33 AM

App No: 2018100518

Antenna Model	APXVBBLL15X_43-C-120						
Frequency	See attached RF frequency chart						
RAD Center	142	Max ERP	300	Antenna Dimensions	66.7''x19.6''x8.5''	Quantity	3

Wednesday, October 10, 2018

11:11:33 AM

MCATLAS
mapping viewer for Montgomery County, Md
1300 Ashton Rd, Ashton, M
Show search results for 1300 A...
1350 ASHTON RD
1360 ASHTON RD
1218 ASHTON RD
433 ft.
1400 ASHTON RD
1200 ASHTON RD
1210 ASHTON RD
1300 ASHTON RD
1216 ASHTON RD
Search result
1300 Ashton Rd, Ashton, Maryland, 20861
Zoom to
108
1361 ASHTON RD

Product: 800MHz RRH and Type 1 Notch Filter

Product Description:
This Remote Radio Head (RRH) supports the 800MHz spectrum with a Dual Transmit and Dual Receiver configuration supporting 2x50W of output power.

Two types of notch filters are also available to support tighter emission requirements for single carrier CDMA operation.

Features / Benefits:

- Supports up to 4 carriers of CDMA in the 800MHz spectrum and is hardware ready for LTE MIMO.
- Supports AISG interface
- External Notch Filter option to meet temporary in-band emissions requirements.
- -48V DC may be powered from Alcatel-Lucent cabinet
- Supports Hybriflex fiber / power cable bundle

Technical Specifications:

Physical Dimensions (HxWxD):	400 x 330 x 250 mm
Weight:	24 kg / 53 lbs
Output Power:	2x50W (100W Total)
Frequency Range:	862.275 – 869MHz Tx / 817.275 – 824 Rx
Instantaneous Bandwidth:	6.725 MHz
Consumed Power (Typ):	425W
Rx Noise Figure:	3.0dB
Antenna Interface:	7/16 DIN Female
Operating Temperature Range:	-40C to +55C (without solar loading)

Supports AISG 1.0, 1.1, 2.0

800MHz Notch Filter:

Physical Dimensions (HxWxD):	225 x 225 x 100 mm
Weight:	5 kg / 11 lbs
Type I (channel 470-500) Frequency Range:	862.125 – 864.125 Tx / 817 - 824Rx
Type II (channel 526) Frequency Range:	863.525 – 864.775 Tx / 817 – 824 Rx
Rx IL dB:	<0.55
AISG:	Pass through

Alcatel·Lucent

Product: 1900MHz RRH (65MHz)

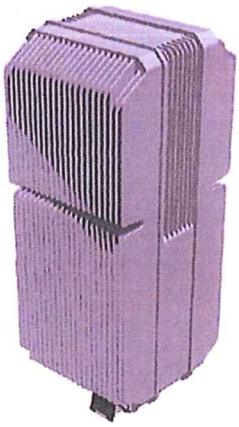

Product Description:
This Remote Radio Head (RRH) supports the 1900MHz spectrum with a Quad Transmit and Quad Receiver configuration supporting 4x45W of output power in a single housing intended for collocation with RF antennas.

Features / Benefits:

- Supports up to 6 carriers of CDMA in the 1900MHz spectrum simultaneously with a 5mhz 4x4 LTE MIMO carrier (dual technology)
- Supports up to 8 carriers of CDMA (single technology)
- Supports AISG
- -48V DC may be powered from Alcatel-Lucent 9927 or 9928 cabinet
- Supports Hybriflex fiber / power cable bundle

Technical Specifications:

Physical Dimensions (HxWxD):	25" x 11.1" x 11.4" 25" x 12.4" x 12.2" including optional solar shield
Weight:	60 pounds
Output Power:	4x45W (180W Total)
Frequency Range:	1930-1995MHz Tx / 1850 - 1915 Rx
Consumed Power (Typ):	680W
Instantaneous Bandwidth:	65 MHz
Rx Noise Figure:	3.0dB
Antenna Interface :	7/16 DIN Female
Operating Temperature Range:	-40C to +55C
Supports AISG 2.0	

Alcatel-Lucent TD-RRH8x20

REMOTE RADIO HEAD

The Alcatel-Lucent TD-RRH8x20-25 is a high-power, small form-factor Remote Radio Head (RRH) operating in the 2.5GHz band (2496MHz-2690MHz). The Alcatel-Lucent TD-RRH8x20 is designed with an eco-efficient approach, providing operators with the means to achieve high quality and capacity coverage with minimum site requirements.

A distributed eNodeB expands deployment options by using two components, a Base Band Unit (BBU) containing the digital assets and a separate RRH containing the radio-frequency (RF) elements. This modular design optimizes available space and allows the main components of an eNodeB to be installed separately, within the same site or several kilometres apart.

The Alcatel-Lucent TD-RRH8x20 is linked to the BBU by an optical-fiber connection carrying downlink and uplink digital radio signals along with operations, administration and maintenance (OA&M) information. The Alcatel-Lucent TD-RRH8x20 has eight transmit RF paths, 20W RF output power per transmit path, and is designed to manage up to eight-way receive diversity.

The Alcatel-Lucent TD-RRH8x20 is designed to make available all the benefits of a distributed eNodeB, with excellent RF characteristics, with low capital expenditures (CAPEX) and low operating expenditures (OPEX). The limited space available in some sites may prevent the installation of traditional single-cabinet BTS equipment or require costly cranes to be employed, leaving coverage holes. However, many of these sites can host an Alcatel-Lucent RRH8x20-25 installation, providing more flexible site selection and improved network quality along with greatly reduced installation time and costs.

Fast, low-cost installation and deployment

The Alcatel-Lucent TD-RRH8x20 is a zero-footprint solution and operates noise-free, simplifying negotiations with site property owners and minimizing environmental impacts. Installation can easily be done by a single person because the Alcatel-Lucent TD-RRH8x20 is compact (volume around 42L), and weighs less than 30kg, eliminating the need for a crane to hoist the BTS cabinet to the rooftop. A site can be in operation in less than one day—a fraction of the time required for a traditional BTS.

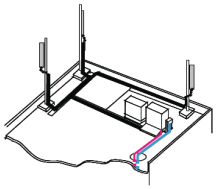

Macro

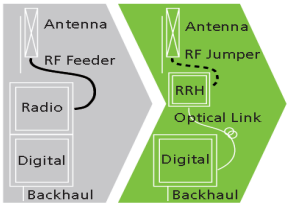

RRH for space-constrained cell sites

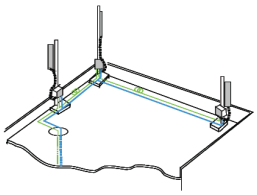

Distributed

Excellent RF performance

Because of its small size and weight, the Alcatel-Lucent TD-RRH8x20 can be installed close to the antenna. Operators can therefore locate the Alcatel-Lucent TD-RRH8x20 where RF engineering is deemed ideal, minimizing trade-offs between available sites and RF optimum sites. The RF feeder cost and installation costs are reduced or eliminated, and there is no need for a Tower Mounted Amplifier (TMA) because losses introduced by the RF feeder are greatly reduced. The Alcatel-Lucent TD-RRH8x20 provides more RF power while at the same time consuming less electricity.

Features

- Zero-footprint deployment
- Easy installation, with a lightweight unit can be carried and set up by one person
- Optimized RF power, with flexible site selection and elimination of a TMA
- Convection-cooled (fanless)
- Noise-free
- Best-in-class power efficiency, with significantly reduced energy consumption

Benefits

- Leverages existing real estate with lower site costs
- Reduces installation costs, with fewer installation materials and simplified logistics
- Decreases power costs and minimizes environmental impacts, with the potential for eco-sustainable power options
- Improves RF performance and adds flexibility to network planning

Technical specifications

Physical dimensions
- Height: 645 mm
- Width: 445 mm
- Depth: 145mm
- Weight: 30Kg (without solar shield & mounting brackets)

Power
- Power supply: -48 VDC

Digital ports and Alarms
- Three optical ports
- Two external alarms

Operating environment
- Outdoor temperature range from -40℃ up to +55℃
- Passive convection cooling (no fans)
- IP65 Enclosure protection (International Protection rating)

RF characteristics
- Frequency bands supported:
  - ¬ 2496MHz to 2690MHz (3GPP Band 41)
- Instantaneous Bandwidth of 60 MHz
- RF output power at antenna port up to 20W nominal
- Rx diversity: 8-way
- Noise figure: 3.2 dB typical
- Antenna Line Device features
  - ¬ Remote electrical tilt (RET) support via AISG v2.0

Optical characteristics
- Single-mode Dual Fiber (SMDF) variant up to 10 km or Multi-mode Dual Fiber (MMDF)

www.alcatel-lucent.com

Alcatel, Lucent, Alcatel-Lucent and the Alcatel-Lucent logo are trademarks of Alcatel-Lucent. All other trademarks are the property of their respective owners.
The information presented is subject to change without notice. Alcatel-Lucent assumes no responsibility for inaccuracies contained herein. Copyright © 2010 Alcatel-Lucent. All rights reserved.
CPG1649091104 (03)

Alcatel·Lucent

RADIO FREQUENCY SYSTEMS
The Clear Choice®

HYBRIFLEX® RRH Hybrid Cable Solution 6x48, 4AWG Multi-Mode Fiber With LC to IPLC Connectors, 200 ft

RFS' HYBRIFLEX Remote Radio Head (RRH) hybrid feeder cabling solution combines optical fiber and DC power for RRHs in a single lightweight cable, making it the world's most innovative solution for RRH deployments.

FEATURES / BENEFITS

- Lightweight solution and compact design – Decreases tower loading
- Robust cabling – Eliminates need for expensive cable trays and ducts
- Optical fiber and power cables housed in single cable – Saves CAPEX by standardizing RRH cable installation and reducing installation requirements
- Outdoor, flame-retardant jacket – Ensures long-lasting cable protection

Technical Features

STRUCTURE		
Cable Type		HYBRIFLEX®
Fire Performance		Flame Retardant
Length	m (ft)	60.96 (200)
MECHANICAL SPECIFICATIONS		
Outer Diameter Nominal	mm (in)	42.16 (1.66)
Cable Weight	kg/m (lb/ft)	3.56 (2.39)
Minimum Bending Radius, Single Bend	mm (in)	152 (6)
Minimum Bending Radius, Multi Bends	mm (in)	254 (10)
Recommended / Maximum Clamp Spacing	m (ft)	1 / 1.2 (3.25 / 4)
DC POWER CABLE SPECIFICATIONS		
Number of DC Pairs		6
Maximum DC-Resistance Power Cable	Ω/km (Ω/kft)	0.83 (0.25)
Cross Section of Power Cable	mm² (AWG)	21.2 (4)
DC Wire Jacket Material		PVC/Nylon
DC Standards (Meets or Exceeds)		For use in Type TC per UL 1277, PVC/Nylon,RoHS/REACH Compliant
Break-out length (Top)	mm(in)	2440
Break-out length (Bottom)	mm(in)	2440
DC Cable sealing method		Semi-rigid flame-retarded polyolefin, with hot melt adhesive
CABLE JACKET		
UV-Protection Individual and External Jacket		Yes
F/O CABLE SPECIFICATIONS		
F/O Cable Type		Multi-Mode
Number of F/O Pairs		48
Core/Clad	µm	50 /125
Secondary Protection Nominal	µm (in)	250 (0.0098)
Single Bending Radius	mm (in)	137.2 (5.4)
F/O Standards (Meets or Exceeds)		UL Listed Type OFNR (UL1666), RoHS Compliant
Optical Loss	dB/Km	3 @ 850 nm 1 @ 1310 nm
Fiber Termination End 1		DLC Connectors
Fiber Termination End 2		IPLC Connectors
FO Break-out length (Top)	mm(in)	2440
FO Break-out length (Bottom)	mm(in)	1250
Cable sealing method		Semi-rigid flame-retarded polyolefin, with hot melt adhesive
TESTING AND ENVIRONMENTAL		
Storage Temperature	°C (°F)	-40 to 85 (-40 to 185)
Operation Temperature	°C (°F)	-40 to 70 (-40 to 158)
Installation Temperature	°C (°F)	-20 to 60 (-4 to 140)
Jacket Specifications		UL2882 Type TC, UL listed (pending)

External Document Links

Notes

All information contained in the present datasheet is subject to confirmation at time of ordering

RADIO FREQUENCY SYSTEMS
The Clear Choice®

HYBRIFLEX® RRH Hybrid Cable Solution 6x48, 4AWG Multi-Mode Fiber With LC to IPLC Connectors, 200 ft

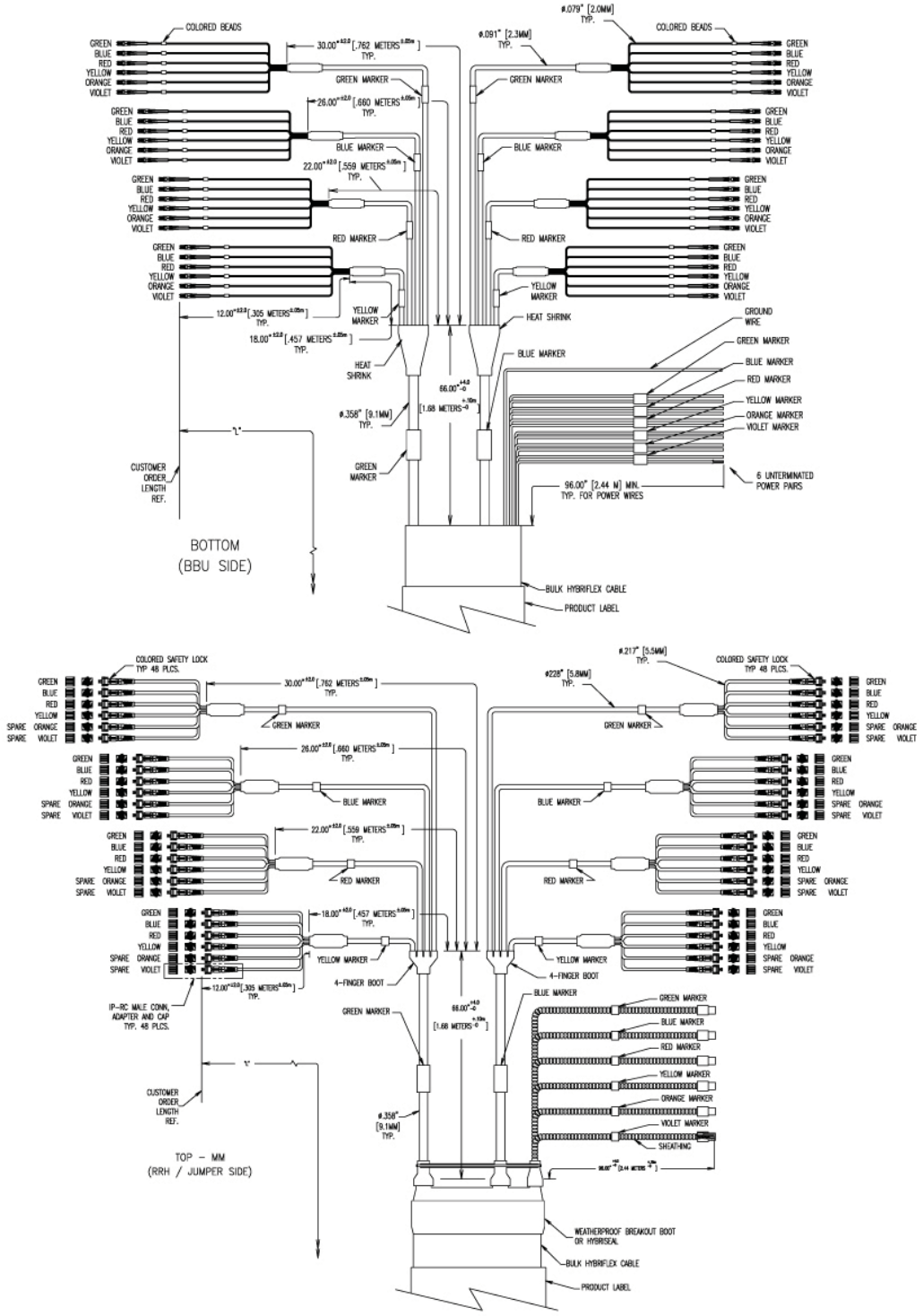

All information contained in the present datasheet is subject to confirmation at time of ordering

Product Data Sheet IBC1900AA-3

PCS In-band Combiner, Phase 3, Mid-A Band

Product Description

This RFS low loss In-Band PCS combiner is designed to support 65 MHz RRHs. The second carrier of LTE is supported on the same RRH with the first carrier of LTE, reducing the number of CPRI links required.

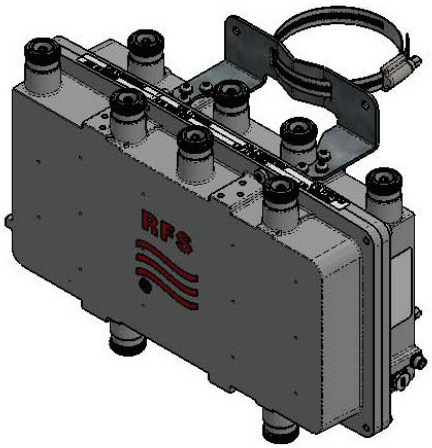

Features/Benefits

- Low insertion loss minimizes impact on link budget
- Long-neck DIN 7/16 connectors for easy connection and waterproofing
- Exceptional reliability and environmental protection (IP67)
- High power handling capability
- Support 65 MHz RRHs with Aux ports or combinations of 65 MHz RRH with 25 MHz RRH
- Required for growth beyond LTE G + 6 Carriers CDMA

Technical Specifications

Electrical Specifications – Branch 1 & 2

RRH1 Passband Frequency range, MHz	1850 -1915 and 1990-1995
RRH2 Passband Frequency range, MHz	1934.375-1944.375 (A4-A11)

Electrical Specifications – Branch 3 & 4

RRH1 Passband Frequency range, MHz	1850-1915 and 1930.625-1934.375 (A1-A3)
RRH2 Passband Frequency range, MHz	1939.375-1944.375 (A8-A11)

System Specifications

Insertion Loss RRH1, dB	0.5 max; 0.2 max @ RX&G
Insertion Loss RRH2, dB	0.6 max
Return loss all ports, dB	18 min
Isolation between RRH1 and RRH2, dB	30 min
Power Handling, W	>200 average power / >3000 peak power
Impedance, Ohm	50
Receive PIM	155 dBc, with 43dBm tones

Mechanical Specifications

Connectors	Long neck DIN 7/16-female, 8 input / 4 output
Weight, kg (lb)	10 (22)
Dimensions, H x W x D, mm (in)	391 x 240 x 107 (15.4 x 9.4 x 4.2)
Volume, L	8
Mounting Option	Pole & Wall

Environmental Specifications

Temperature Range, °C, °F	-40 to +65 (-40 to +149)
Environmental	ETSI 300-019-2-4 Class 4.1E
Ingress Protection (mated)	IP67
Lightning Protection, all ports	IEC 61000-4-5 Level 4 / IEC 61312-4 / IEC 801-5 / 10 kA, 8/20 us,

* This data is provisional and subject to change.

All information contained in the present datasheet is subject to confirmation at time of ordering.

PCS In-band Combiner, Phase 3, Mid-A Band

Drawings

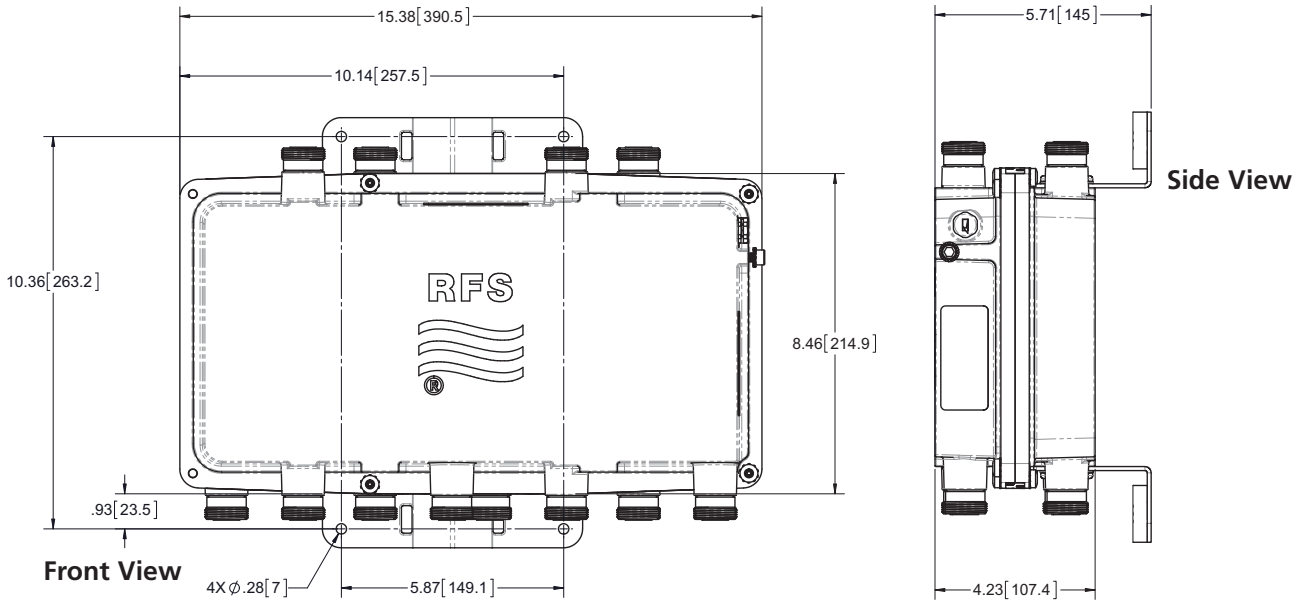

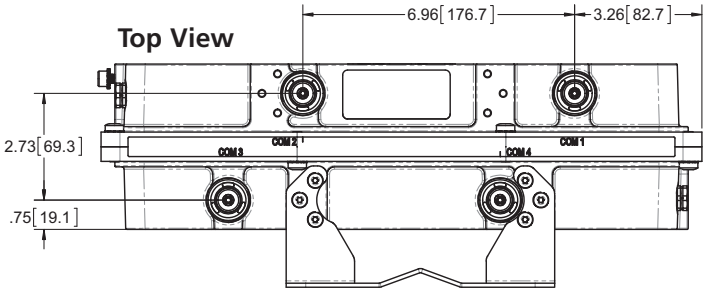

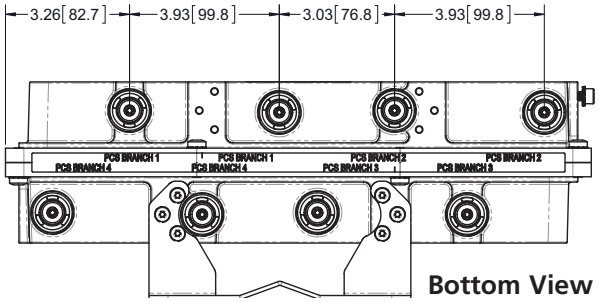

Port Labeling**

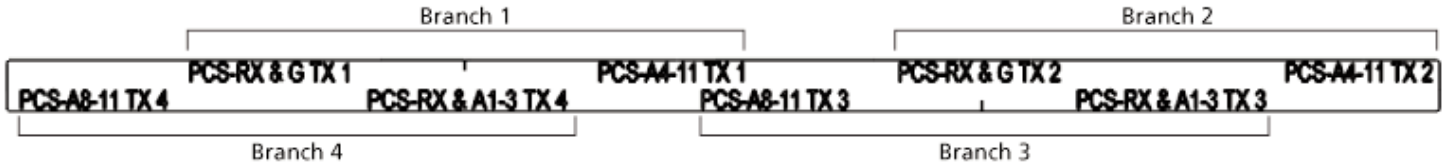

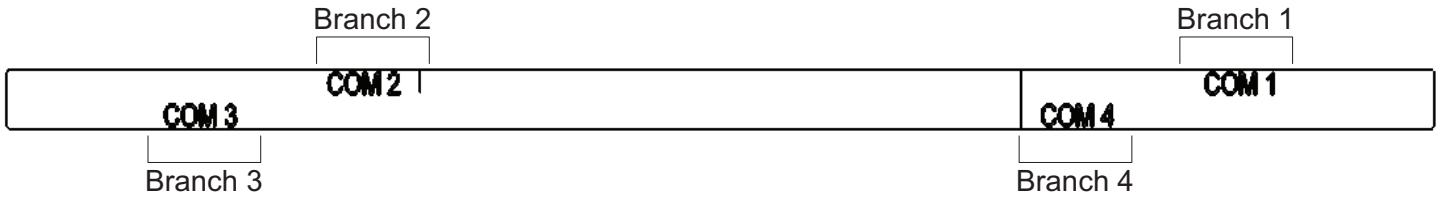

* This data is provisional and subject to change.
** Refer to page 1 for specific frequencies

All information contained in the present datasheet is subject to confirmation at time of ordering.

Antenna Model	SprintVision RFDS Channel	Tx: Start Frequency MHz	Tx: Center Frequency	Tx: Stop Frequency MHz	Rx: Start Frequency MHz	Rx: Center Frequency	Rx: Stop Frequency MHz
APXVSPP18-C-A20 (dual band) APXVBBLL15_43-C-I20 (triband)	476	862.275	862.9	863.525	817.275	817.9	818.525
	8763	863.8	866.3	868.8	818.8	821.3	823.8
	25	1930.625	1931.25	1931.875	1850.625	1851.25	1851.875
	50	1931.875	1932.5	1933.125	1851.875	1852.5	1853.125
	75	1933.125	1933.75	1934.375	1853.125	1853.75	1854.375
	8140	1935	1940	1945	1855	1860	1865
	8665	1990	1992.5	1995	1910	1912.5	1915
APXV9TM14-C-I20 APXV9TM-ALU-I20 APXVTM14-ALU-I20 AAHC-MMA	L06	2618.9	2628.8	2637.8	2618.9	2628.8	2637.8
	L07	2638.7	2648.6	2658.5	2638.7	2648.6	2658.5
	L08	2659.4	2668.4	2677.4	2659.4	2668.4	2677.4

RADIO FREQUENCY SYSTEMS
The Clear Choice®

RF X-TREME™ 8-port Antenna, 1.5m, 694-960/694-960/1695-2690/1695-2690MHz, 65deg, 14.7/14.8/19.3/19.1dBi, VET, 2-12°/2-12°/2-12°/2-12°

FEATURES / BENEFITS

This antenna provides an 8-port multi-band flexible platform for advanced use in both low and high bands

- **4 ports / 2 systems in low band**
- **4 ports / 2 systems in high band**
- **Integrated RET platform**
- **Slim radome design**
- **MIMO 4x4 for LTE 700 & 2600**

Technical Features

LOW BAND LEFT ARRAY (694-960 MHZ) [R1]

Frequency Band	MHz	694-790	790-894	880-960
Gain	dBi	13.6	14.6	14.7
Horizontal Beamwidth @3dB	Deg	69.3 +/- 9.5	61.8 +/- 5.3	58.2 +/- 2.9
Vertical Beamwidth @3dB	Deg	16.1 +/- 1.7	14 +/- 1.1	12.7 +/- 0.6
Front-to-Back, at +/-30°, Total Power	dB	17.4	21.6	23
First Upper Side Lobe Suppression	dB	15.4	17.3	16.3
Electrical Downtilt Range	Deg	2 to 12		
3rd Order PIM 2 x 43dBm	dBc	-153		
VSWR	-	1.5		
Return Loss	dB	14		
Cross Polar Isolation	dB	25		
Inter Band Isolation	dB	R1//R2 Typical 26 R1//Y1 Typical 25 R1//Y2 Typical 35		
Maximum Effective Power per Port	Watt	300		

LOW BAND RIGHT ARRAY (694-960 MHZ) [R2]

Frequency Band	MHz	694-790	790-894	880-960
Gain	dBi	13.9	14.7	14.8
Horizontal Beamwidth @3dB	Deg	69.9 +/- 10.2	62.5 +/- 5.7	58.7 +/- 3.1
Vertical Beamwidth @3dB	Deg	16 +/- 1.7	13.9 +/- 1.1	12.7 +/- 0.6
Front-to-Back, at +/-30°, Total Power	dB	17.3	20.9	24.3
First Upper Side Lobe Suppression	dB	17	17.4	16.5
Electrical Downtilt Range	Deg	2 to 12		
3rd Order PIM 2 x 43dBm	dBc	-153		
VSWR	-	1.5		
Return Loss	dB	14		
Cross Polar Isolation	dB	25		
Inter Band Isolation	dB	R2//R1 Typical 26 R2//Y1 Typical 35 R2//Y2 Typical 25		
Maximum Effective Power per Port	Watt	300		

All information contained in the present datasheet is subject to confirmation at time of ordering

RADIO FREQUENCY SYSTEMS
The Clear Choice®

RF X-TREME™ 8-port Antenna, 1.5m, 694-960/694-960/1695-2690/1695-2690MHz, 65deg, 14.7/14.8/19.3/19.1dBi, VET, 2-12°/2-12°/2-12°/2-12°

HIGH BAND LEFT ARRAY (1695-2690 MHZ) [Y1]

Frequency Band	MHz	1695-1880	1850-2010	1900-2170	2300-2500	2500-2690
Gain	dBi	17.9	18.1	18.3	18.6	19.3
Horizontal Beamwidth @3dB	Deg	63.7 +/- 10	58.3 +/- 3	59.7 +/- 4.7	61.2 +/- 3.7	54 +/- 5.6
Vertical Beamwidth @3dB	Deg	6.4 +/- 0.2	6 +/- 0.5	5.7 +/- 0.5	4.9 +/- 0.4	4.5 +/- 0.3
Front-to-Back, at +/-30°, Total Power	dB	24.2	25.2	25.8	24.6	24.5
First Upper Side Lobe Suppression	dB	15.9	15.1	13.9	14.8	11.5
Electrical Downtilt Range	Deg	2 to 12				
3rd Order PIM 2 x 43dBm	dBc	-153				
VSWR	-	1.5				
Return Loss	dB	14				
Cross Polar Isolation	dB	25				
Inter Band Isolation	dB	Y1//R1 Typical 25 Y1//R2 Typical 35 Y1//Y2 Typical 33				
Maximum Effective Power per Port	Watt	300				

HIGH BAND RIGHT ARRAY (1695-2690 MHZ) [Y2]

Frequency Band	MHz	1695-1880	1850-2010	1900-2170	2300-2500	2500-2690
Gain	dBi	17.7	17.8	18.2	18.3	19.1
Horizontal Beamwidth @3dB	Deg	63.9 +/- 8.5	59.2 +/- 3.2	59.9 +/- 4.5	60 +/- 4.2	53.4 +/- 4.1
Vertical Beamwidth @3dB	Deg	6.4 +/- 0.3	6 +/- 0.5	5.7 +/- 0.5	4.8 +/- 0.4	4.4 +/- 0.3
Front-to-Back, at +/-30°, Total Power	dB	23.4	24.3	26.1	25.7	25.6
First Upper Side Lobe Suppression	dB	15.3	14.8	13.7	16.1	15.6
Electrical Downtilt Range	Deg	2 to 12				
3rd Order PIM 2 x 43dBm	dBc	-153				
VSWR	-	1.5				
Return Loss	dB	14				
Cross Polar Isolation	dB	25				
Inter Band Isolation	dB	Y2//R1 Typical 35 Y2//R2 Typical 25 Y2//Y1 Typical 33				
Maximum Effective Power per Port	Watt	300				

All information contained in the present datasheet is subject to confirmation at time of ordering

RADIO FREQUENCY SYSTEMS
The Clear Choice®

RF X-TREME™ 8-port Antenna, 1.5m, 694-960/694-960/1695-2690/1695-2690MHz, 65deg, 14.7/14.8/19.3/19.1dBi, VET, 2-12°/2-12°/2-12°/2-12°

ELECTRICAL SPECIFICATIONS

Impedance	Ohm	50.0
Polarization	Deg	±45°

MECHANICAL SPECIFICATIONS

Dimensions - H x W x D	mm (in)	1694 x 499 x 215 (66.7 x 19.6 x 8.5)
Weight (Antenna Only)	kg (lb)	34 (75)
Weight (Mounting Hardware only)	kg (lb)	3.4 (7.5)
Packing size- HxWxD	mm (in)	1830 x 560 x 411 (72 x 22 x 16.2)
Shipping Weight	kg (lb)	43.4 (95.7)
Connector type		8 x 4.3-10 female at bottom + 2 AISG connectors (1 male, 1 female)
Adjustment mechanism		M RET solution AISG 2.0
Mounting Hardware Material		Diecast Aluminium and Galvanized steel
Radome Material / Color		Fiber Glass / Light Grey RAL7035

TESTING AND ENVIRONMENTAL

Temperature Range	°C (°F)	-40 to 60 (-40 to 140)
Lightning protection		IEC 61000-4-5
Survival/Rated Wind Velocity	km/h	240 (150)
Wind Load @Rated Wind Front	N	564.0
Wind Load @Rated Wind Side	N	275.0
Wind Load @Rated Wind Rear	N	723.0
Environmental		ETSI 300-019-2-4 Class 4.1E

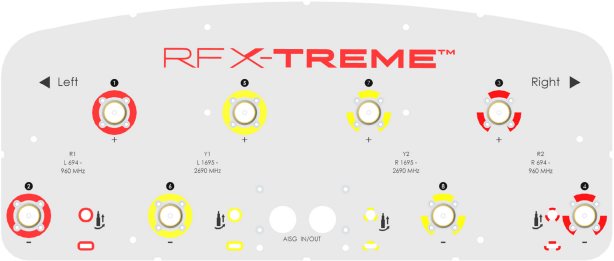

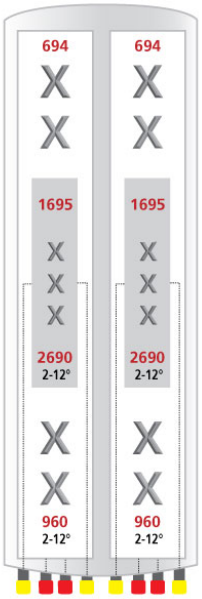

Antenna Array

All information contained in the present datasheet is subject to confirmation at time of ordering

RADIO FREQUENCY SYSTEMS
The Clear Choice®

RF X-TREME™ 8-port Antenna, 1.5m, 694-960/694-960/1695-2690/1695-2690MHz, 65deg, 14.7/14.8/19.3/19.1dBi, VET, 2-12°/2-12°/2-12°/2-12°

ORDERING INFORMATION

Order No.	Configuration	Mounting Hardware	Mounting pipe Diameter	Weight
APXVBBLL15X_43-C	Manual tilt control	APM40-2 Beam tilt kit	60-120mm	35.7 Kg
APXVBBLL15X_43-C-I20	Internal RET included	APM40-2 Beam tilt kit	60-120mm	37.4 kg

External Document Links

APM40_Series_Installation_Instructions
Manual_Overdrive_Instructions
Global RFS Website

Notes

NOTE1: All electrical parameters are compliant with BASTA NGMN 9.6 requirements.
NOTE2: RET upgrade is not available for APXVBBLL15X_43-C. Please order the APXVBBLL15X_43-C-I20.

Available Configurations

- APXVBBLL15X_43-C - No RET included - weight 35.7 Kg
- APXVBBLL15X_43-C-I20 - M RET included - weight 37.4 Kg

For additional mounting information please click "External Document Links".

*This data is provisional and subject to changes

External Link Reference

Global RFS Website	http://www.rfsworld.com

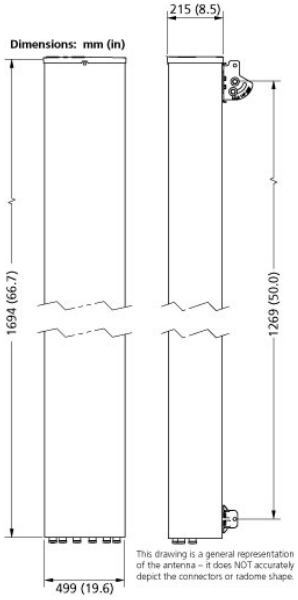

All information contained in the present datasheet is subject to confirmation at time of ordering

Product Data Sheet APXVTM14-ALU-I20

TD-LTE Cross Polarized Antenna, 2490-2690, 1.4m, 0-6 deg EDT

Product Description

This antenna is an ideal choice for complex sites with the TD-LTE band.

Features/Benefits

- **Effective polarization diversity ensured by high cross polar discrimination**
- **Wind load thrust highly reduced**
- **Variable electrical downtilt 0-6 degrees**
- **AISG 2.0**
- **Integrated RET motor, AISG 2.0**

Technical Specifications

Electrical Specifications

Frequency Range, MHz	2490-2600, 2600-2690
Polarization	Dual Pol +/-45°
Electrical downtilt range, degrees	0-6
Calibration and Electrical Parameter	
Transmission from antenna ports to cal. port, dB	-26 ±2
Amplitude diff. between antenna port and cal. port, dB	< 0.7
Phase diff. between antenna port and cal. port, degrees	< 5
Same polarization ISO, dB (typical)	> 25
Different polarization ISO, dB	> 28
Unit Beam	
Horizontal Beamwidth, degrees	68 ±5, 62 ±5
Gain, dBi	18.0
Cross-polar ratio on main axis, dB	≥ 15
Cross-polar ratio @ ±60°, dB	≥ 10
Front-to-back ratio, dBi	≥ 25
Broadcast Beam	
Horizontal Beamwidth, degrees	65 ±5
Gain, dBi	18
Vertical Beamwidth, degrees	5.0
Cross-polar ratio on main axis, dB	≥ 15
Cross-polar ratio @ ±60°, dB	≥ 10
Front-to-back ratio, dB	≥ 28
Upper sidelobe suppression, dB	≤ -16
Service Beam	
Gain @ 0°, dB	23.5
Horizontal Beamwidth@ 0°, degrees	20
Side lobe suppression@ 0° on H-pattern, dB	≤ -12
Gain@±30°, dBi	≥ 21.5
Horizontal Beamwidth@ ±30°, degrees	≤ 23
Side lobe suppression @ 30° on H-pattern, dB	≤ -6
Cross-polar ratio on main axis, dB	≥ 22
Front-to-back ratio @ 0°, dB	≥ 30

Mechanical Specifications

Dimensions-HxWxD, mm	1430 x 320 x 160
Connector Type	(8) 4.1/9.5 DIN Female (1) NF – Calibration Port
Impedance,Ohms	50
Maximum Power Input, W	50
Lightning Protection	Direct Ground
Weight w/o Mtg Hardware, kg	25.5
Survival Wind Speed, km/h	240
Rated Wind Speed, km/h	160
Max Wind Loading Area, m²	0.55
Radome Material	ASA
Radome Color	Light Grey RAL7035
Mounting Hardware Material	Aluminum
Shipping Weight, kg	32
Packing Dimensions, HxWxD, mm	1550 x 440 x 200

Ordering Information

Mounting Hardware	Included
Mounting Pipe Diameter, mm	50-114
Mounting Hardware Weight, kg	5.2

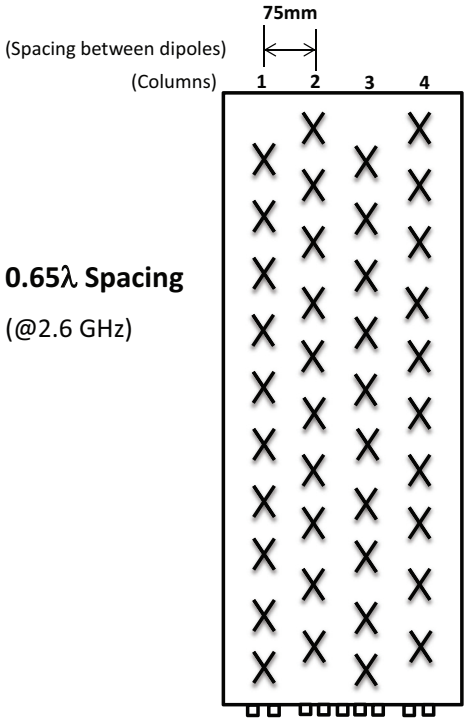

0.65λ Spacing

(@2.6 GHz)

Antenna Port Layout

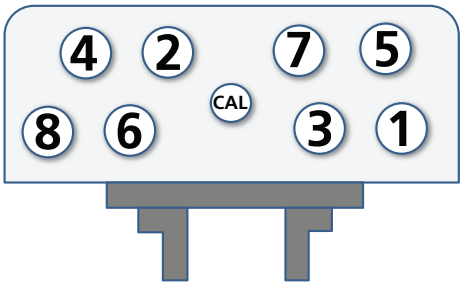

Mounting Bracket

* This data is provisional and subject to change.

All information contained in the present datasheet is subject to confirmation at time of ordering.

Antenna Model	SprintVision RFDS Channel	Tx: Start Frequency MHz	Tx: Center Frequency	Tx: Stop Frequency MHz	Rx: Start Frequency MHz	Rx: Center Frequency	Rx: Stop Frequency MHz
APXVSPP18-C-A20 (dual band) APXVBBLL15_43-C-I20 (triband)	476	862.275	862.9	863.525	817.275	817.9	818.525
	8763	863.8	866.3	868.8	818.8	821.3	823.8
	25	1930.625	1931.25	1931.875	1850.625	1851.25	1851.875
	50	1931.875	1932.5	1933.125	1851.875	1852.5	1853.125
	75	1933.125	1933.75	1934.375	1853.125	1853.75	1854.375
	8140	1935	1940	1945	1855	1860	1865
	8665	1990	1992.5	1995	1910	1912.5	1915
APXV9TM14-C-I20 APXV9TM-ALU-I20 APXVTM14-ALU-I20 AAHC-MMA	L06	2618.9	2628.8	2637.8	2618.9	2628.8	2637.8
	L07	2638.7	2648.6	2658.5	2638.7	2648.6	2658.5
	L08	2659.4	2668.4	2677.4	2659.4	2668.4	2677.4

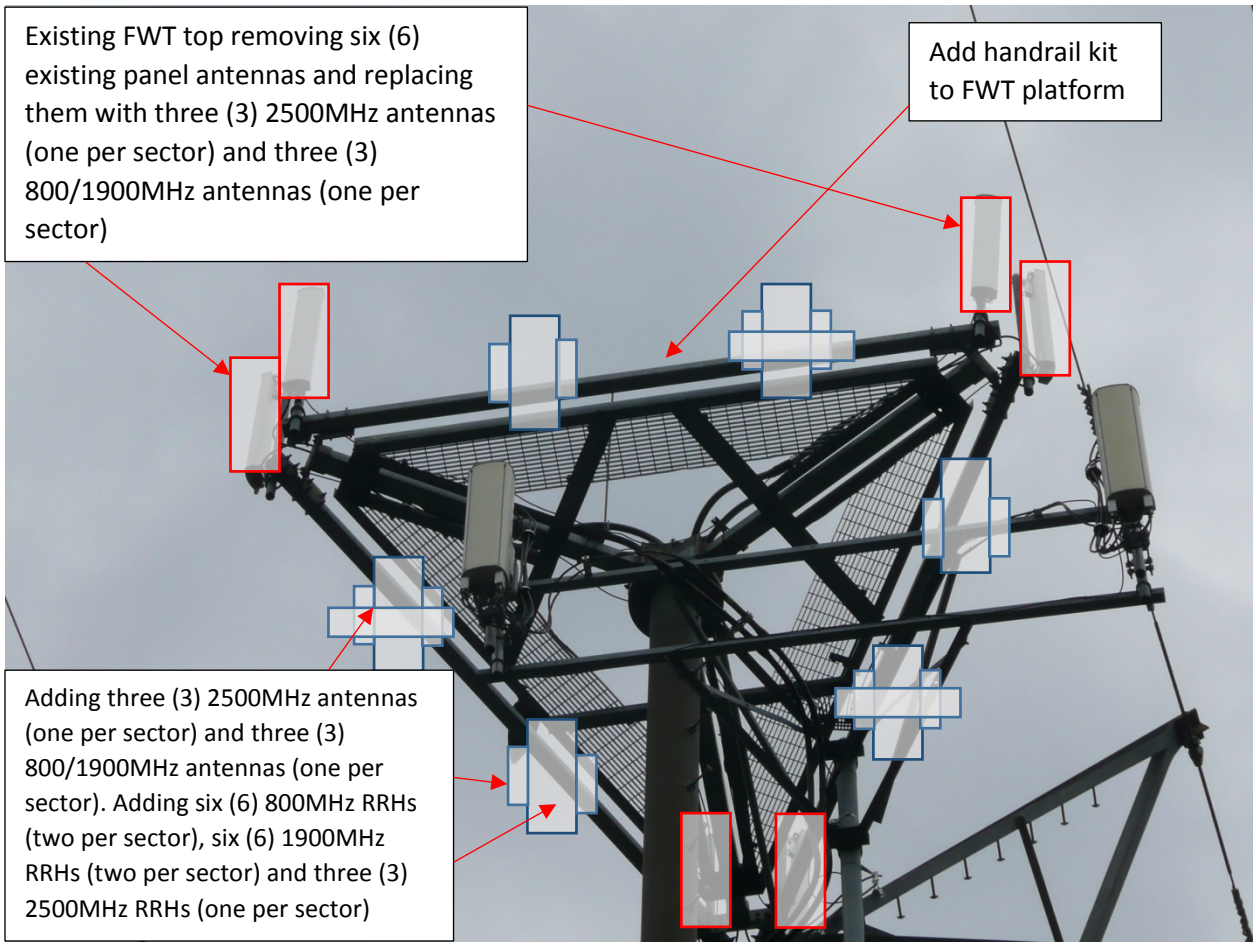
Existing FWT top removing six (6) existing panel antennas and replacing them with three (3) 2500MHz antennas (one per sector) and three (3) 800/1900MHz antennas (one per sector)
Add handrail kit to FWT platform
Adding three (3) 2500MHz antennas (one per sector) and three (3) 800/1900MHz antennas (one per sector). Adding six (6) 800MHz RRHs (two per sector), six (6) 1900MHz RRHs (two per sector) and three (3) 2500MHz RRHs (one per sector)

Existing MMBTS cabinet
Existing battery cabinet

Sprint

6391 SPRINT PARKWAY
OVERLAND PARK, KANSAS 66251
800-400-6040

SITE NAME: PEPCO TOWER 163S
SITE NUMBER: WA54XC512
1300 ASHTON ROAD
ASHTON, MD 20861
DO MACRO UPGRADE PROJECT

entrex
communication services, inc.

6600 Rockledge Drive, Suite 550
Bethesda, MD 20817
Phone: (202)408-0960
Fax: (202)408-0961

SUBMITTALS

DATE	DESCRIPTION	REV.
10-09-18	CONSTRUCTION REVIEW	

SEAL:

GENERAL NOTES

1. THE CONTRACTOR SHALL GIVE ALL NOTICES AND COMPLY WITH ALL LAWS, ORDINANCES, RULES, REGULATIONS AND LAWFUL ORDERS OF ANY PUBLIC AUTHORITY, MUNICIPAL AND UTILITY COMPANY SPECIFICATIONS, AND LOCAL AND STATE JURISDICTIONAL CODES BEARING ON THE PERFORMANCE OF THE WORK. THE WORK PERFORMED ON THE PROJECT AND THE MATERIALS INSTALLED SHALL BE IN STRICT ACCORDANCE WITH ALL APPLICABLE CODES, REGULATIONS AND ORDINANCES.
2. THE ARCHITECT/ENGINEER HAS MADE EVERY EFFORT TO SET FORTH IN THE CONSTRUCTION AND CONTRACT DOCUMENTS THE COMPLETE SCOPE OF WORK. THE CONTRACTOR BIDDING THE JOB IS NEVERTHELESS CAUTIONED THAT MINOR OMISSIONS OR ERRORS IN THE DRAWINGS AND OR SPECIFICATIONS SHALL NOT EXCUSE SAID CONTRACTOR FROM COMPLETING THE PROJECT AND IMPROVEMENTS IN ACCORDANCE WITH THE INTENT OF THESE DOCUMENTS.
3. THE CONTRACTOR OR BIDDER SHALL BEAR THE RESPONSIBILITY OF NOTIFYING (IN WRITING) THE CONSTRUCTION MANAGER OF ANY CONFLICTS, ERRORS, OR OMISSIONS PRIOR TO THE SUBMISSION OF CONTRACTOR'S PROPOSAL OR PERFORMANCE OF WORK. IN THE EVENT OF DISCREPANCIES THE CONTRACTOR SHALL PRICE THE MORE COSTLY OR EXTENSIVE WORK, UNLESS DIRECTED IN WRITING OTHERWISE.
4. THE SCOPE OF WORK SHALL INCLUDE FURNISHING ALL MATERIALS, EQUIPMENT, LABOR AND ALL OTHER MATERIALS AND LABOR DEEMED NECESSARY TO COMPLETE THE WORK/PROJECT AS DESCRIBED HEREIN.
5. THE CONTRACTOR SHALL VISIT THE JOB SITE PRIOR TO THE SUBMISSION OF BIDS OR PERFORMING WORK TO FAMILIARIZE HIMSELF WITH THE FIELD CONDITIONS AND TO VERIFY THAT THE PROJECT CAN BE CONSTRUCTED IN ACCORDANCE WITH THE CONTRACT DOCUMENTS.
6. THE CONTRACTOR SHALL OBTAIN AUTHORIZATION TO PROCEED WITH CONSTRUCTION PRIOR TO STARTING WORK ON ANY ITEM NOT CLEARLY DEFINED BY THE CONSTRUCTION DRAWING/CONTRACT DOCUMENTS.
7. THE CONTRACTOR SHALL INSTALL ALL EQUIPMENT AND MATERIALS ACCORDING TO THE MANUFACTURER'S/VENDOR'S SPECIFICATION UNLESS NOTED OTHERWISE OR WHERE LOCAL CODES OR ORDINANCES TAKE PRECEDENCE.
8. THE CONTRACTOR SHALL PROVIDE A FULL SET OF CONSTRUCTION DOCUMENTS AT THE SITE UPDATED WITH THE LATEST REVISIONS AND ADDENDA OR CLARIFICATIONS AVAILABLE FOR THE USE BY ALL PERSONNEL INVOLVED WITH THE PROJECT.
9. THE CONTRACTOR SHALL SUPERVISE AND DIRECT THE PROJECT DESCRIBED HEREIN. THE CONTRACTOR SHALL BE SOLELY RESPONSIBLE FOR ALL CONSTRUCTION MEANS, METHODS, TECHNIQUES, SEQUENCES AND PROCEDURES AND FOR COORDINATING ALL PORTIONS OF THE WORK UNDER THE CONTRACT.
10. THE CONTRACTOR SHALL BE RESPONSIBLE FOR OBTAINING ALL PERMITS AND INSPECTIONS WHICH MAY BE REQUIRED FOR THE BY THE ARCHITECT/ENGINEER, THE STATE, COUNTY OR LOCAL GOVERNMENT AUTHORITY.
11. THE CONTRACTOR SHALL MAKE NECESSARY PROVISIONS TO PROTECT EXISTING IMPROVEMENTS, EASEMENTS, PAVING, CURBING, ETC. DURING CONSTRUCTION. UPON COMPLETION OF WORK, THE CONTRACTOR SHALL REPAIR ANY DAMAGE THAT MAY HAVE OCCURED DUE TO CONSTRUCTION ON OR ABOUT THE PROPERTY.
12. THE CONTRACTOR SHALL KEEP THE GENERAL WORK AREA CLEAN AND HAZARD FREE DURING CONSTRUCTION AND DISPOSE OF ALL DIRT, DEBRIS, RUBBISH AND REMOVE EQUIPMENT NOT SPECIFIED AS REMAINING ON THE PROPERTY. PREMISES SHALL BE LEFT IN CLEAN CONDITION AND FREE FROM PAINT SPOTS, DUST, OR SMUDGES OF ANY NATURE.
13. THE CONTRACTOR SHALL COMPLY WITH ALL OSHA REQUIREMENTS AS THEY APPLY TO THIS PROJECT.
14. THE CONTRACTOR SHALL NOTIFY THE CONSTRUCTION MANAGER WHERE A CONFLICT OCCURS ON ANY OF THE CONTRACT DOCUMENTS. THE CONTRACTOR IS NOT TO ORDER MATERIAL OR CONSTRUCT ANY PORTION OF THE WORK THAT IS IN CONFLICT IS RESOLVED BY THE CONSTRUCTION MANAGER.
15. THE CONTRACTOR SHALL VERIFY ALL DIMENSIONS, ELEVATIONS, PROPERTY LINES, ETC. ON THE PROJECT.

APPROVALS

	NAME	DATE
SITE ACQUISITION:		
CONSTRUCTION:		
RF:		
ZONING:		
PROPERTY OWNER:		

VICINITY MAP

DRIVING DIRECTIONS:

FROM BETHESDA, MARYLAND TAKE I-270 NORTH TOWARDS FREDERICK, PROCEED NORTHWEST TOWARD EDGEMOOR LN, TURN LEFT ONTO OLD GEORGETOWN RD, TURN RIGHT ONTO THE BETHESDA TROLLEY TRAIL, CONTINUE STRAIGHT TO STAY ON THE BETHESDA TROLLEY TRAIL, TURN RIGHT TO STAY ON MATTHEW HENSON TRAIL, SLIGHT LEFT TO STAY ON MATTHEW HENSON TRAIL, SLIGHT RIGHT ONTO LLEWELLYN MANOR WAY, SHARP LEFT ONTO MD-182 N/NORWOOD RD, TURN RIGHT ONTO OLNEY SANDY SPRING RD, CONTINUE ONTO ASHTON RD, PROCEED 1.7 MILES TO 1300 ASHTON RD
ASHTON, MD 20861.

SYMBOLS AND ABBREVIATIONS

ADJ	ADJUSTABLE	MECH	MECHANICAL
APPROX	APPROXIMATE	MFR	MANUFACTURER
CAB	CABINET	MGB	MAIN GROUND BAR
CLG	CEILING	MIN	MINIMUM
CONC	CONCRETE	MTL	METAL
CONT	CONTINUOUS	NIC	NOT IN CONTRACT
CJ	CONSTRUCTION JOINT	NTS	NOT TO SCALE
DIA	DIAMETER	OC	ON CENTER
DWG	DRAWING	OPP	OPPOSITE
EGB	EQUIPMENT GROUND BAR	SF	SQUARE FOOT
EA	EACH	SHT	SHEET
ELEC	ELECTRICAL	SIM	SIMILAR
EL	ELEVATION	SS	STAINLESS STEEL
EQ	EQUAL	STL	STEEL
EQUIP	EQUIPMENT	TOC	TOP OF CONCRETE
EXT	EXTERIOR	TOM	TOP OF MASONRY
FF	FINISHED FLOOR	TOS	TOP OF STEEL
GA	GAGE	TYP	TYPICAL
GALV	GALVANIZED	VIF	VERIFY IN FIELD
GB	GROUND BAR	UON	UNLESS OTHERWISE NOTED
GC	GENERAL CONTRACTOR	WWF	WELDED WIRE FABRIC
GRND	GROUND	W/	WITH
LG	LONG	&	AND
LLH	LONG LEG HORIZONTAL	@	AT
MAX	MAXIMUM		

	SPOT ELEVATION
℄	CENTERLINE
ℙ	PLATE
No. / SHT	DETAIL NUMBER / SHEET NUMBER
—G—	GROUND WIRE
	COAXIAL CABLE
	ANTENNA

SHEET INDEX

T-1 TITLE SHEET
C-1 SITE PLAN
A-1 EXISTING AND NEW WORK COMPOUND PLANS
A-2 TOWER ELEVATION
S-1 ANTENNA LAYOUT PLANS, SCHEDULE, DETAILS AND NOTES
S-2 ANTENNA AND RADIO HEAD DETAILS
S-3 EQUIPMENT AND CABLE DETAILS
S-4 FIBER DISTRIBUTION CABINET DETAILS
S-5 SITE DETAILS AND STRUCTURAL NOTES
E-1 DC POWER DIAGRAMS
E-2 GROUNDING DETAILS AND NOTES
SP-1 SPECIFICATIONS
SP-2 SPECIFICATIONS
SP-3 EQUIPMENT CABLING SCHEMATIC
SP-4 2.5 GHz CABLE COLOR CODE DETAILS
SP-5 2.5 GHz CONNECTIVITY DETAILS
SP-6 2.5 GHz POWER CONNECTIVITY AND EQUIPMENT DETAILS

PROJECT DESCRIPTION

SCOPE OF WORK:

1. REMOVE (6) EXISTING ANTENNAS AND (6) EXISTING COAXIAL CABLES FROM FWT PLATFORM.
2. INSTALL NEW HANDRAIL, (6) NEW ANTENNAS, (3) NEW COMBINERS AND (15) RRHS ON EXISTING PLATFORM. (3) RRHS RELOCATED FROM GROUND.
3. INSTALL (4) NEW HYBRIFLEX CABLES IN THE FWT EXTENSION.
4. INSTALL GROUNDING.

PROPERTY OWNER: POTOMAC ELECTRICAL POWER COMPANY
C/O CORP. TAX. DEPT. STE 5617
709 9TH ST., NW
WASHINGTON, DC 20001

ENGINEERING: ENTREX COMMUNICATION SERVICES, INC.
MARC A. MARZULLO, P.E.
202-408-0960

APPLICANT: APC REALTY AND EQUIPMENT COMPANY, LLC.
d/b/a SPRINT
6391 SPRINT PARKWAY
OVERLAND PARK, KANSAS 66251

LATITUDE: N 39° 09' 39.17"
LONGITUDE: W 76° 59' 02.31"
GROUND ELEVATION: ±417' AMSL AT BASE
JURISDICTION: MONTGOMERY COUNTY
ACCOUNT IDENTIFIER: 08-00716671
PROPERTY INFO: MAP/ PARCEL: KT13/P335
ZONING: RC

Sprint
6391 SPRINT PARKWAY
OVERLAND PARK, KANSAS 66251

PROJECT NO:	1015.920
DESIGNER:	M.A.
ENGINEER:	M.M.

SCALE: AS SHOWN

WA54XC512
PEPCO TOWER 163S
1300 ASHTON ROAD
ASHTON, MD 20861

TITLE:

TITLE SHEET

SHEET NUMBER:

T-1

VICINITY MAP

SITE NOTES

1.) SITE NAME: PEPCO TOWER 163S
SITE NUMBER: WA54XC512

2.) THIS IS NOT A BOUNDARY SURVEY AND IS NOT TO BE USED FOR THE TRANSFER OF PROPERTY.

3.) THE SUBJECT PARCEL INFORMATION:
OWNER: POTOMAC ELECTRICAL POWER COMPANY

PREMISES ADDRESS: 1300 ASHTON ROAD
ASHTON, MD 20861

MAILING ADDRESS:
C/O CORP TAX DEPT STE 5617
709 9TH ST NW
WASHINGTON, DC 20001-4501

ACCOUNT IDENTIFIER: 08-00716671
MAP/PARCEL: KT13/335

4.) THE LOCATION OF THE EXISTING TOWER IS AS FOLLOWS; THE VALUES LISTED BELOW ARE WITHIN ±50' HORIZONTAL AND ±20' VERTICAL.
LATITUDE: N 39° 09' 39.17"
LONGITUDE: W 76° 59' 02.31"
ELEVATION: ±417' AMSL AT BASE

LINE TYPES

BOUNDARY LINE – PARENT PARCEL
UNSURVEYED LINE – BOUNDARY OF ADJOINERS
CENTER LINE
CONSERVATION EASEMENT
BUILDING SET BACK
EDGE OF ASPHALT
FENCE LINE – CHAIN
1' CONTOUR LINE
5' CONTOUR LINE
TREE OR VEGETATION LINE
CONCRETE SURFACE
ASPHALT SURFACE
GRAVEL SURFACE

LEGEND

FOUND PROPERTY CORNER
UTILITY POLE
GUY ANCHOR
SIGN
LIGHT POLE
SANITARY MANHOLE
INDIVIDUAL TREE – DECIDUOUS

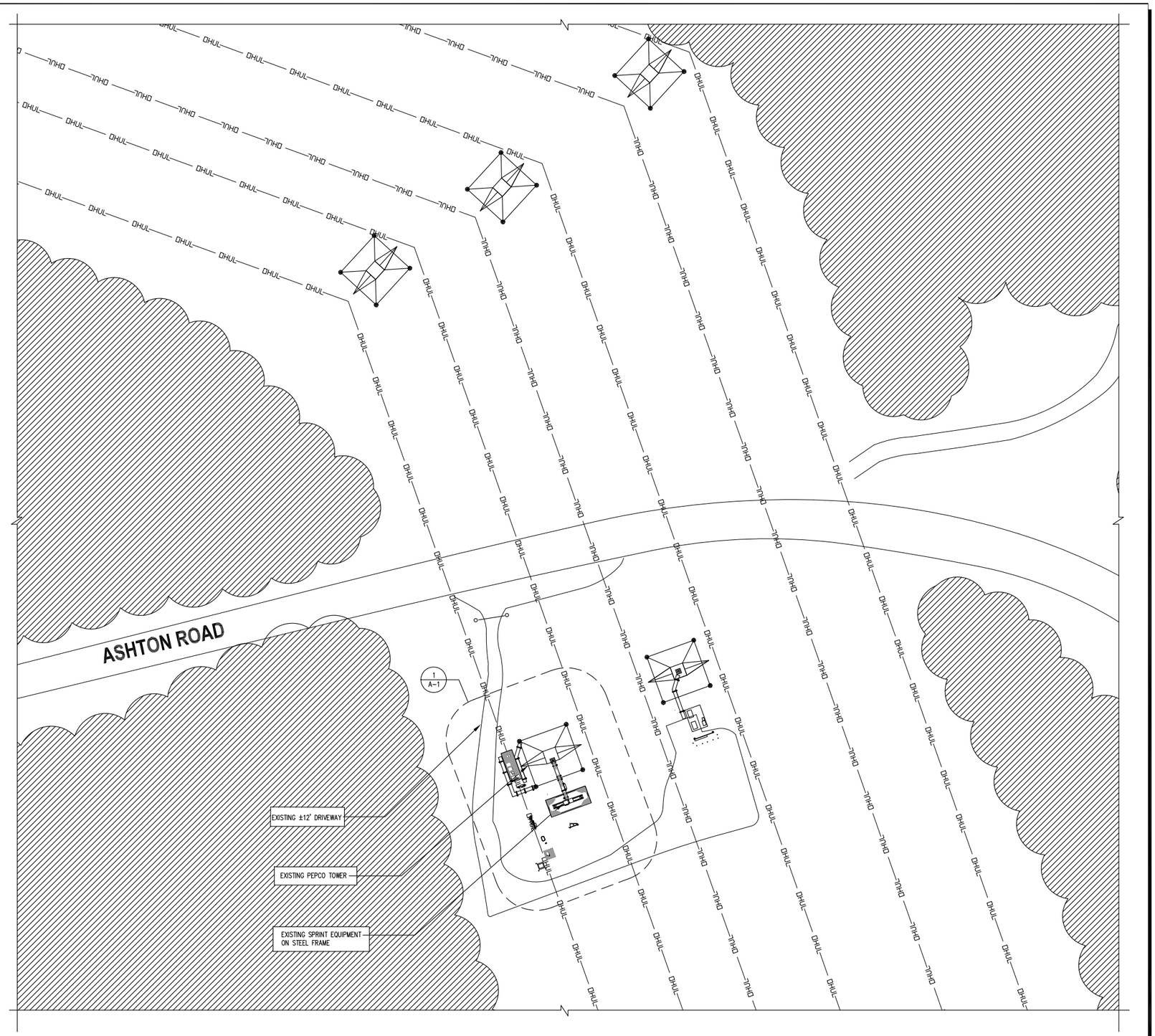

SITE PLAN
SCALE: 1"=30'-0"
1 / C-1
TRUE NORTH

GRAPHIC SCALE
50 0 25 50 100 200
(IN FEET)
1 inch = 50 ft.

entrex
communication services, inc.
6600 Rockledge Drive, Suite 550
Bethesda, MD 20817
Phone: (202)408-0960
Fax: (202)408-0961

SUBMITTALS

DATE	DESCRIPTION	REV.
10-09-18	CONSTRUCTION REVIEW	

SEAL:

Sprint
6391 SPRINT PARKWAY
OVERLAND PARK, KANSAS 66251

PROJECT NO:	1015.920
DESIGNER:	M.A.
ENGINEER:	M.M.

SCALE: AS SHOWN

WA54XC512
PEPCO TOWER 163S
1300 ASHTON ROAD
ASHTON, MD 20861

TITLE:

SITE PLAN

SHEET NUMBER:
C-1

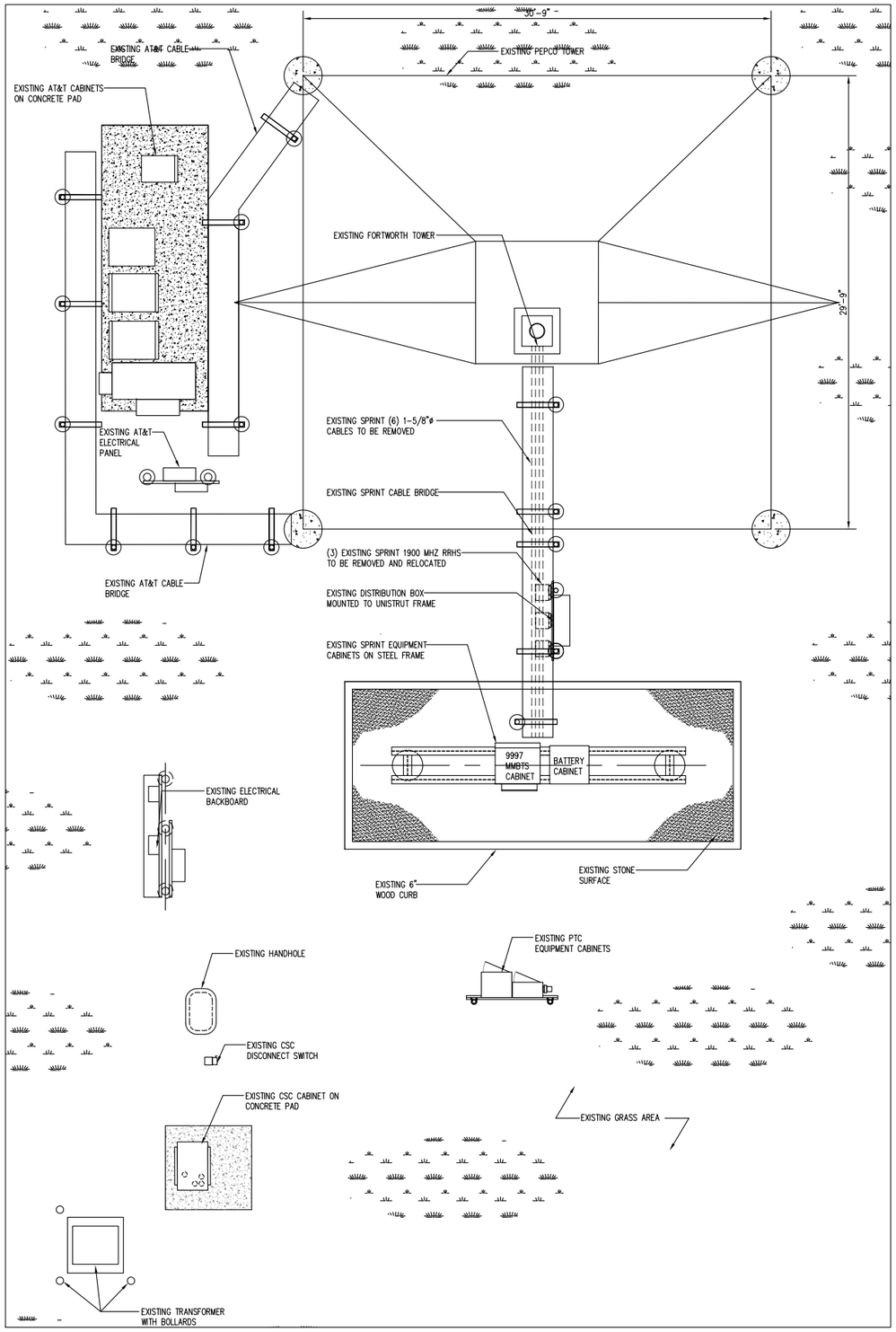

EXISTING COMPOUND LAYOUT PLAN (1 / A-1)
SCALE: 1/4"=1'-0"
TRUE NORTH

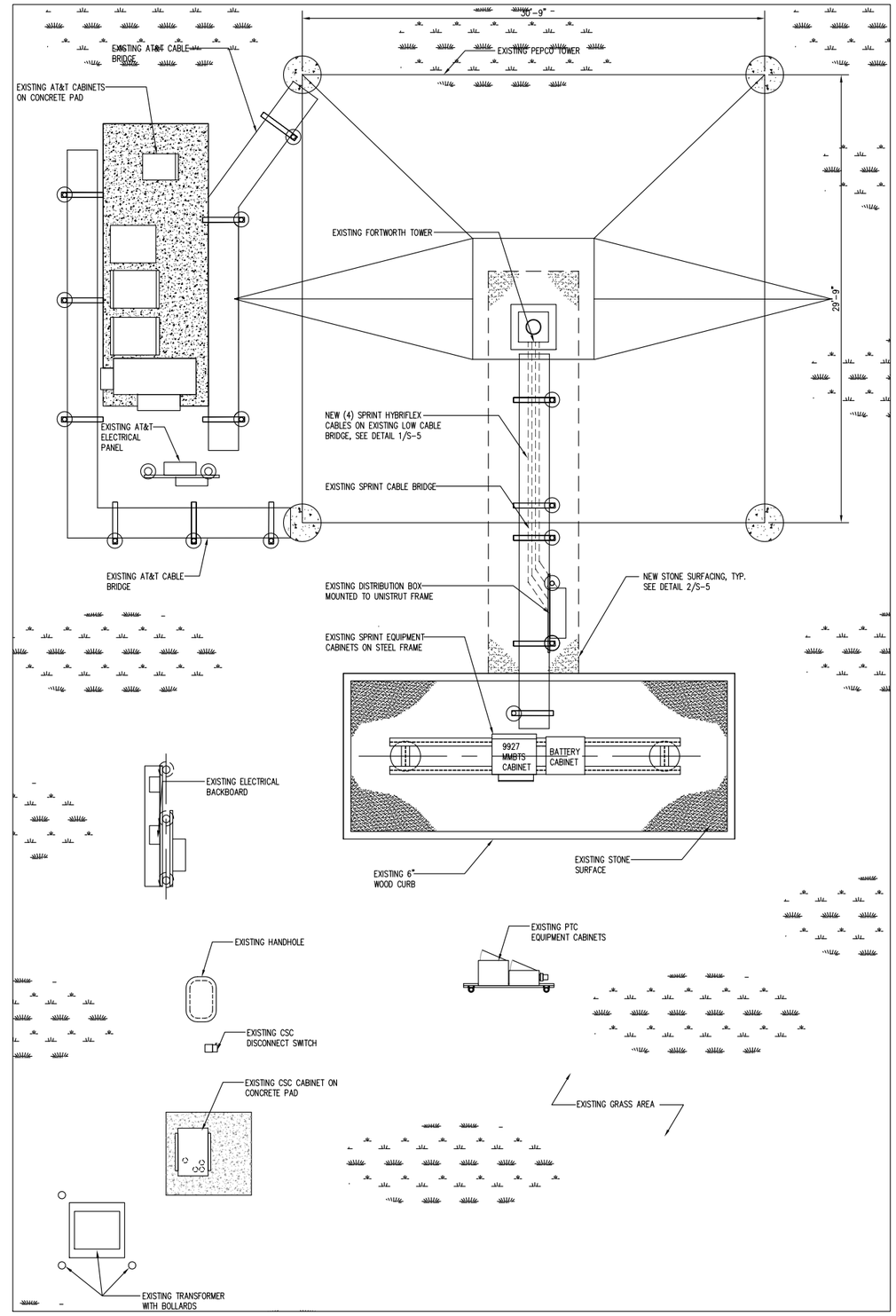

NEW COMPOUND LAYOUT PLAN (2 / A-1)
SCALE: 1/4"=1'-0"
TRUE NORTH

entrex
communication services, inc.
6600 Rockledge Drive, Suite 550
Bethesda, MD 20817
Phone: (202)408-0960
Fax: (202)408-0961

SUBMITTALS

DATE	DESCRIPTION	REV.
10-09-18	CONSTRUCTION REVIEW	

SEAL:

Sprint
6391 SPRINT PARKWAY
OVERLAND PARK, KANSAS 66251

PROJECT NO: 1015.920
DESIGNER: M.A.
ENGINEER: M.M.
SCALE: AS SHOWN

WA54XC512
PEPCO TOWER 163S
1300 ASHTON ROAD
ASHTON, MD 20861

TITLE:

EXISTING AND NEW WORK COMPOUND PLANS

SHEET NUMBER:

A-1

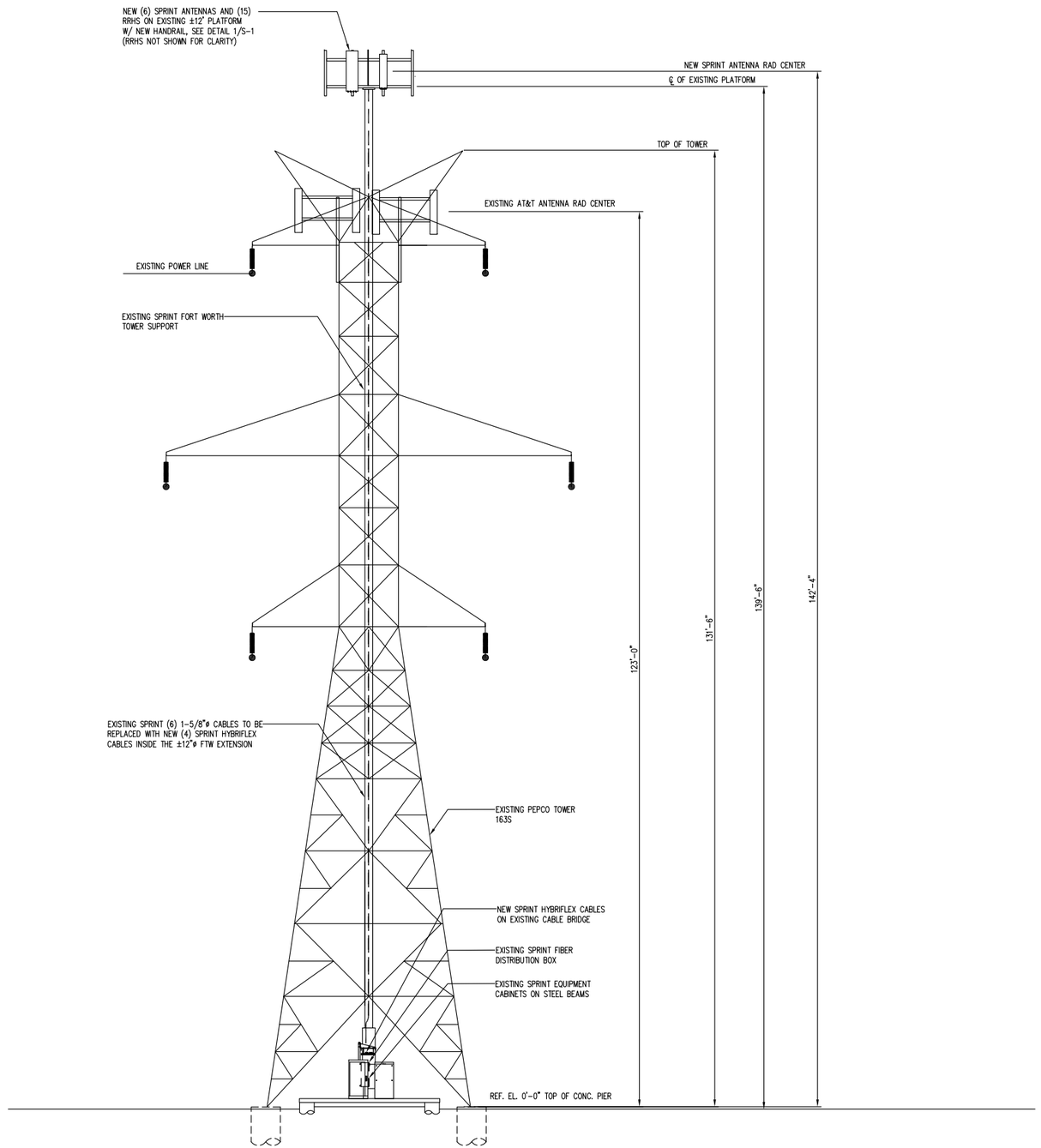

TOWER ELEVATION (1 / A-2)
SCALE: 1/8" = 1'-0"

entrex
communication services, inc.

6600 Rockledge Drive, Suite 550
Bethesda, MD 20817
Phone: (202)408-0960
Fax: (202)408-0961

SUBMITTALS

DATE	DESCRIPTION	REV.
10-09-18	CONSTRUCTION REVIEW	

SEAL:

Sprint
6391 SPRINT PARKWAY
OVERLAND PARK, KANSAS 66251

PROJECT NO:	1015.920
DESIGNER:	M.A.
ENGINEER:	M.M.

SCALE: AS SHOWN

WA54XC512
PEPCO TOWER 163S
1300 ASHTON ROAD
ASHTON, MD 20861

TITLE:

TOWER ELEVATION

SHEET NUMBER:

A-2

ANTENNA AND COAXIAL CABLE SCHEDULE (NO FINAL EBTS)

LOCATION		AZIMUTH	RAD CENTER	TECHNOLOGY MHZ	ANTENNA MODEL #	MECHANICAL DOWN-TILT	EFFECTIVE DOWN-TILT	RRH'S	FILTER	COMBINER MODEL #	CABLE INFO	CABLE LENGTH	JUMPER LENGTH	COLOR CODE
SECTOR 1	A-1	10°	142'-4"	800/1900	(N) RFS APXVBBLL15X-43-C-I20 (66.7" H x 19.6" W x 8.5" D)	0°	-0° (800 MHz) -0° (1900 MHz	(1E) RRH 4x45-1900 (1N) RRH 4x45-1900 (2N) RRH 2x50-800	-	RFS IBC1900AA-3	(2N) 1.66"ø HYBRID 4 AWG/6 PAIR 48 MM FIBER	±185'	10'-0" (LCF12-50J)	SEE NOTE 9.
	A-2	10°	142'-4"	2500	(N) RFS APXVTM14-ALU-I20 (71.9"H x 13.8" W x 8.2"D)	0°	0°	(1N) TD-RRH 8x20-25	-	-	SHARED HYBRID CABLE	-	10'-0" (LCF12-50J)	
SECTOR 2	B-1	140°	142'-4"	800/1900	(N) RFS APXVBBLL15X-43-C-I20 (66.7" H x 19.6" W x 8.5" D)	0°	-0° (800 MHz) -0° (1900 MHz	(1E) RRH 4x45-1900 (1N) RRH 4x45-1900 (2N) RRH 2x50-800	-	RFS IBC1900AA-3	(1N) 1.66"ø HYBRID 4 AWG/6 PAIR 48 MM FIBER	±185'	10'-0" (LCF12-50J)	SEE NOTE 9.
	B-2	140°	142'-4"	2500	(N) RFS APXVTM14-ALU-I20 (71.9"H x 13.8" W x 8.2"D)	0°	0°	(1N) TD-RRH 8x20-25	-	-	SHARED HYBRID CABLE	-	10'-0" (LCF12-50J)	
SECTOR 3	C-1	255°	142'-4"	800/1900	(N) RFS APXVBBLL15X-43-C-I20 (66.7" H x 19.6" W x 8.5" D)	0°	-0° (800 MHz) -0° (1900 MHz	(1E) RRH 4x45-1900 (1N) RRH 4x45-1900 (2N) RRH 2x50-800	-	RFS IBC1900AA-3	(1N) 1.66"ø HYBRID 4 AWG/6 PAIR 48 MM FIBER	±185'	10'-0" (LCF12-50J)	SEE NOTE 9.
	C-2	255°	142'-4"	2500	(N) RFS APXVTM14-ALU-I20 (71.9"H x 13.8" W x 8.2"D)	0°	0°	(1N) TD-RRH 8x20-25	-	-	SHARED HYBRID CABLE	-	10'-0" (LCF12-50J)	

(1E) ONE EXISTING
(1N) ONE NEW

COLOR CODE	
W	WHITE
Br	BROWN
G	GREEN
R	RED
Bl	BLUE
P	PURPLE
Y	YELLOW

CABLE MINIMUM BEND RADIUS	
1/2"ø JUMPER	1-1/4"ø HYBRIFLEX
5"	20"

ANTENNA AND RF CABLE NOTES

1. ANTENNAS SHALL BE FURNISHED WITH MOUNTING BRACKETS.

2. PROVIDE 1/2" DIAMETER JUMPER CABLE 10'-0" MAXIMUM LENGTH FROM ANTENNA TO RRH.

3. ANTENNA CENTERLINE HEIGHT IS IN REFERENCE TO ELEVATION 0.0'.

4. CONTRACTOR SHALL INSTALL COLOR CODE RINGS ON EACH END OF JUMPER CABLES AND JUMPER CABLES WITH UV RESISTANT TAPE. ALL CABLES SHALL BE MARKED AT THE TOP AND BOTTOM WITH 2" COLOR TAPE OR STENCIL TAG. COLOR TAPE MAY BE OBTAINED FROM GRAYBAR ELECTRONIC. THE FIRST RING IS THE CLOSEST TO THE END OF THE CABLE. WRAP 2" COLORED TAPE A MINIMUM OF 3 TIMES AROUND THE CIRCUMFERENCE OF THE COAX, KEEPING THE TAPE IN THE SAME AREA AS MUCH AS POSSIBLE. THIS WILL ALLOW THE REMOVAL OF THE TAPE THAT WILL FADE OR DISCOLOR DUE TO WEATHER.

5. PROVIDE PHOTOGRAPHS SHOWING COMPLETE INSTALLATION OF THE ANTENNA MOUNTS, WEATHERPROOFING AND CABLE CODING.

6. THE NORTH ARROW ON THE PLANS REFERS TO TRUE NORTH. THE CONTRACTOR SHALL VERIFY THE NORTH REFERENCE PRIOR TO CONSTRUCTION AND NOTIFY THE ARCHITECT/ENGINEER OF ANY DISCREPANCY.

7. THE CONTRACTOR SHALL SUPPLY ALL CONNECTION HARDWARE TO SECURE THE RF CABLES. ALL CONNECTION HARDWARE SHALL BE STAINLESS STEEL.

8. THE OWNER SHALL FURNISH THE ANTENNAS, THE RF RADIO EQUIPMENT AND OTHER MATERIALS FOR THE PROJECT. THE CONTRACTOR SHALL VERIFY WITH THE OWNER THE MATERIALS TO BE FURNISHED PRIOR TO SUBMITTING A BID.

9. REFER TO CABLE COLOR CODING DETAILS.

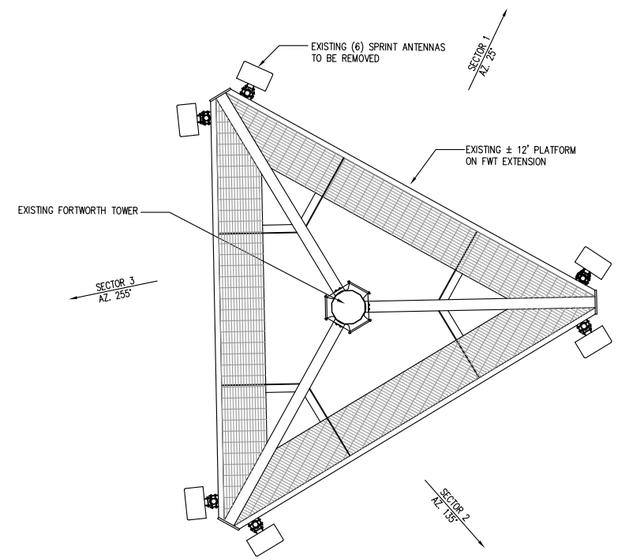

EXISTING ANTENNA LOCATION PLAN

SCALE: 3/8"=1'-0"

1 S-1

TRUE NORTH

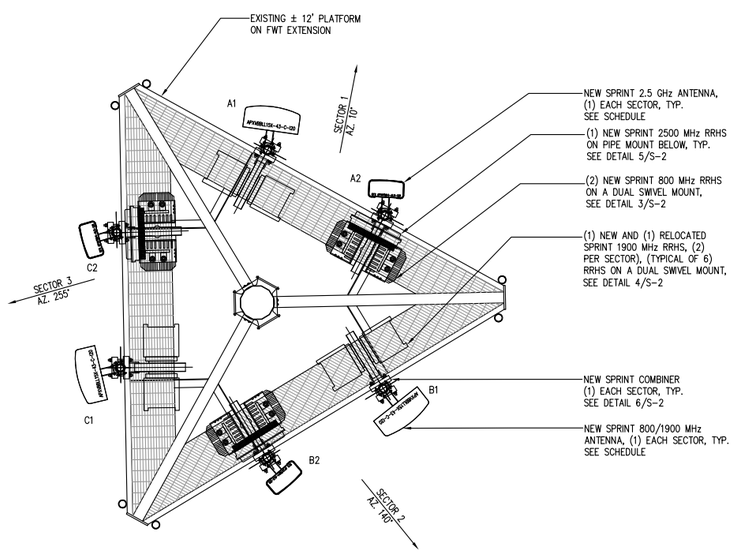

NEW ANTENNA LOCATION PLAN

SCALE: 1/2"=1'-0"

2 S-1

TRUE NORTH

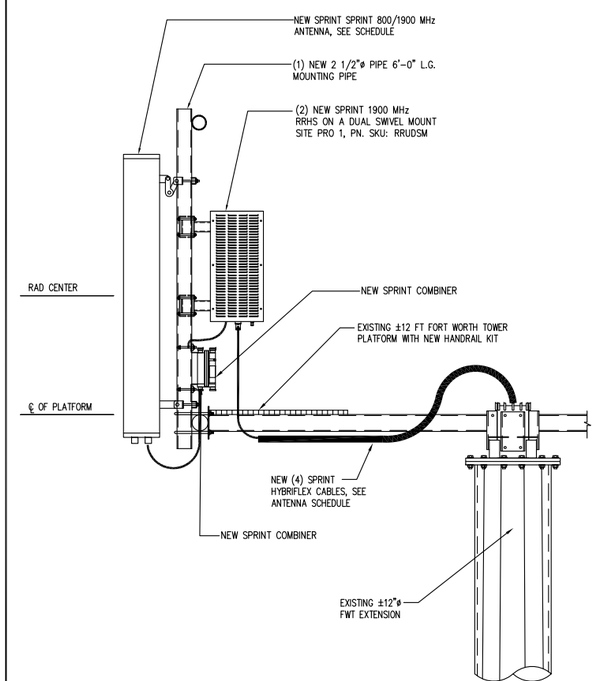

800/1900 MHz ANTENNA AND 1900 MHz RRHS MOUNTING DETAIL

SCALE: 1"=1'-0"

3 S-1

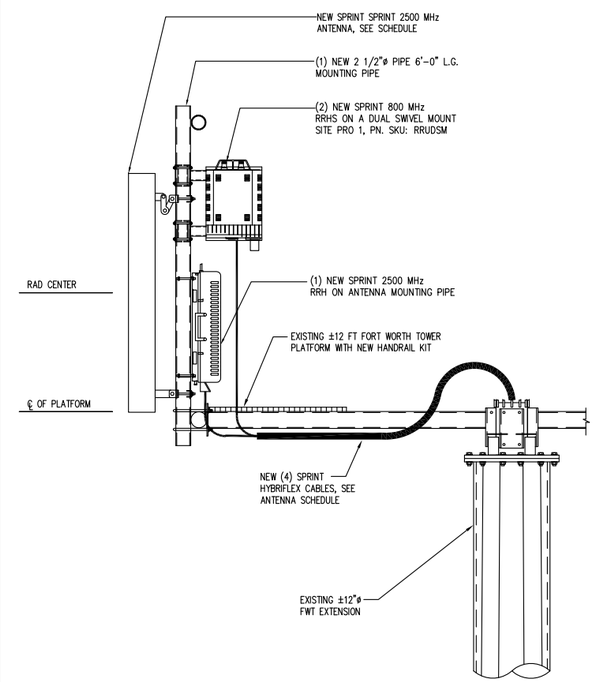

2.5 GHz ANTENNA AND 800 MHz RRHS MOUNTING DETAIL

SCALE: 1"=1'-0"

3 S-1

entrex communication services, inc.
6600 Rockledge Drive. Suite 550
Bethesda, MD 20817
Phone: (202)408-0960
Fax: (202)408-0961

SUBMITTALS

DATE	DESCRIPTION	REV.
10-09-18	CONSTRUCTION REVIEW	

SEAL:

Sprint
8391 SPRINT PARKWAY
OVERLAND PARK, KANSAS 66251

PROJECT NO:	1015.920
DESIGNER:	M.A.
ENGINEER:	M.M.

SCALE: AS SHOWN

WA54XC512
PEPCO TOWER 163S
1300 ASHTON ROAD
ASHTON, MD 20861

TITLE:

ANTENNA LAYOUT PLANS, SCHEDULE, DETAILS AND NOTES

SHEET NUMBER:

S-1

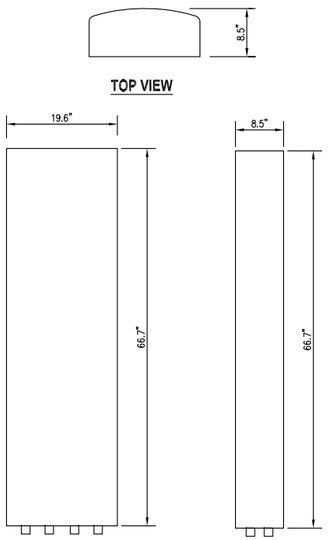

ANTENNA MANUF.: RFS
MODEL: APXVBBLL15X-43-C-I20

FREQUENCY RANGE: 800/1900/2500 MHz

ANTENNA DIMENSIONS: 66.7" H x 19.6" W x 8.5" D
WEIGHT WITH MOUNTING HARDWARE: 82.5 LBS

800/1900 MHz ANTENNA DETAIL (1 / S-2)

SCALE: 1"=1'-0"

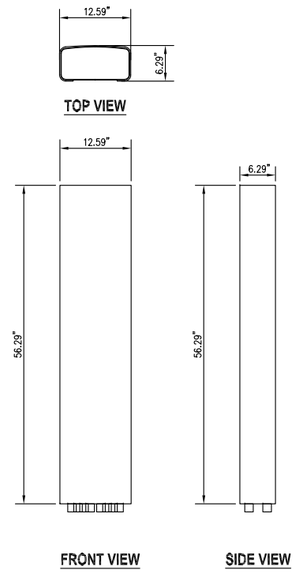

ANTENNA MODEL
RFS APXVTM14-ALU-I20

FREQUENCY RANGE: 2490-2600 MHz
2600-2690 MHZ

ANTENNA DIMENSIONS: 56.29" H x 12.59" W x 6.29" D
WEIGHT WITH MOUNTING HARDWARE: 64 LBS.

2.5 GHz ANTENNA DETAIL (2 / S-2)

SCALE: 800/1900 MHz

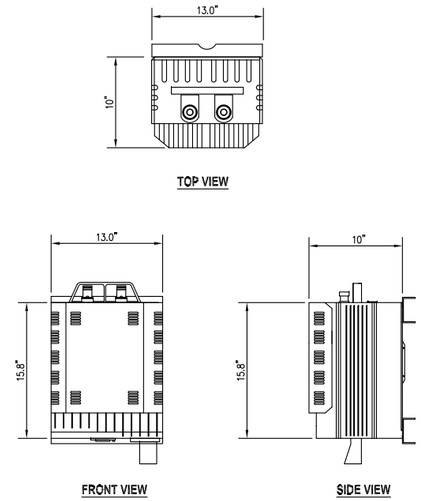

MODEL: ALU 800 2X50 (NO FILTER)
DIMENSIONS: 15.8"Hx13.0"Wx10"D
RRH WEIGHT W/MOUNTS: ±60.1 LBS

800 MHz RRH DETAIL (3 / S-2)

SCALE: 1-1/2"=1'-0"

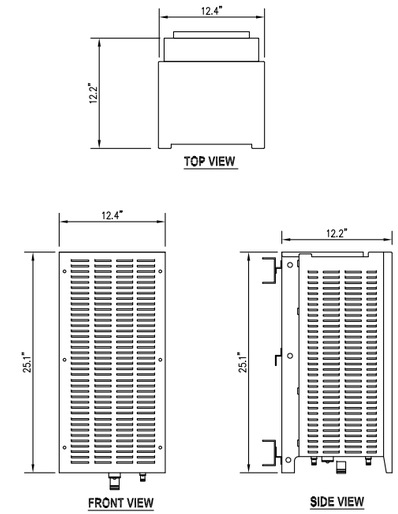

MODEL: ALU 1900 4X45
DIMENSIONS: 25.1"Hx12.4"Wx12.2"D
RRH WEIGHT W/SOLAR SHIELD AND BRACKETS WEIGHT: ±74.5 LBS

1900 MHz RRH DETAIL (4 / S-2)

SCALE: 1-1/2"=1'-0"

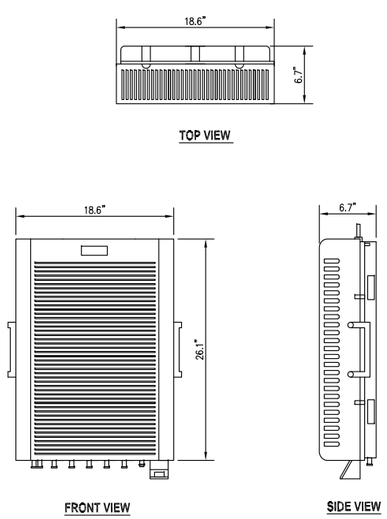

MODEL: ALU TD-RRH8x20
DIMENSIONS: 26.1"Hx18.6"Wx6.7"D
RRH WEIGHT BRACKETS WEIGHT: ±80.0 LBS

2500 MHz RRH DETAIL (5 / S-2)

SCALE: 1-1/2"=1'-0"

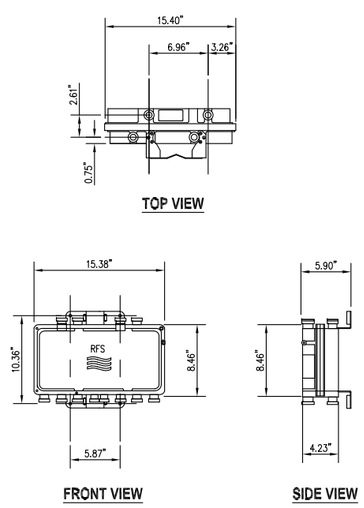

MODEL: RFS IBC1900AA-3
DIMENSIONS: 15.4"H x 9.4"W x 4.2"D
RRH WEIGHT W/MOUNTS: ±22 LBS

1900 MHz RRH COMBINER DETAIL (6 / S-2)

SCALE: 1-1/2"=1'-0"

entrex
communication services, inc.

6600 Rockledge Drive, Suite 550
Bethesda, MD 20817
Phone: (202)408-0960
Fax: (202)408-0961

SUBMITTALS

DATE	DESCRIPTION	REV.
10-09-18	CONSTRUCTION REVIEW	

SEAL:

Sprint
6391 SPRINT PARKWAY
OVERLAND PARK, KANSAS 66251

PROJECT NO: 1015.920
DESIGNER: M.A.
ENGINEER: M.M.

SCALE: AS SHOWN

WA54XC512
PEPCO TOWER 163S
1300 ASHTON ROAD
ASHTON, MD 20861

TITLE:

ANTENNA AND RADIO HEAD DETAILS

SHEET NUMBER:

S-2

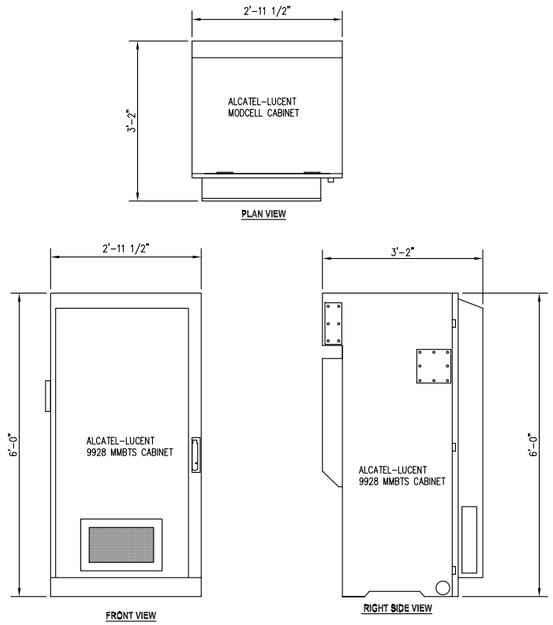

NOTE: EXISTING CABINET WEIGHT FULLY LOADED = 1074 LBS
NEW AUXILIARY CABINET EXTENSION 110 LBS

EXISTING ALU 9928 MMBTS CABINET

SCALE: 3/4"=1'-0"

1 / S-3

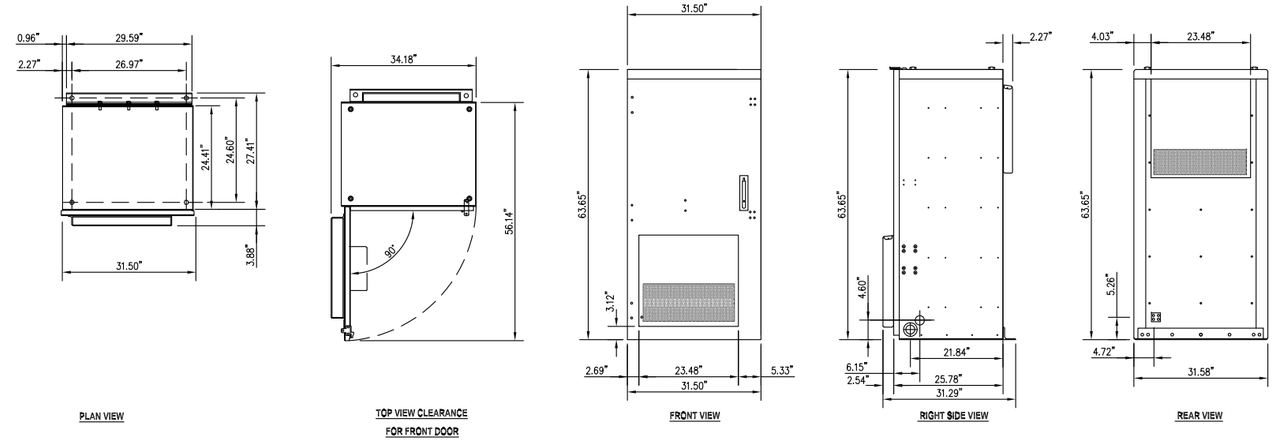

NOTES
1. TE CABINET IS NOT LIFTED WITH BATTERIES IN PLACE. ALL BATTERIES

RRH MODEL
ALCATEL LUCENT TD-RRH8x20

CABINET SIZE:	63.65" x 31.50"x 31.29"
SHIPPING WEIGHT:	600 LBS.
LIFT WEIGHT:	540 LBS.
WEIGHT WITH BATTERIES INSTALLED:	2640 LBS.

EXISTING ALCATEL LUCENT BATTERY CABINET DETAILS

SCALE: 1"=1'-0"

2 / S-3

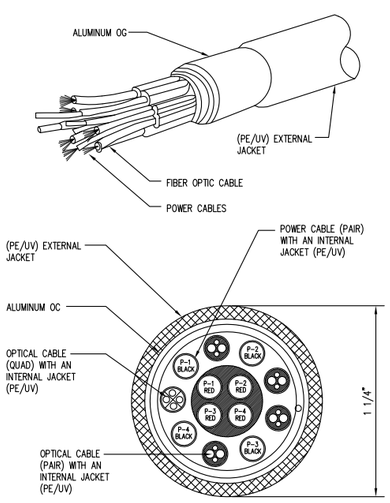

SEE THE ANTENNA SCHEDULE FOR THE SPECIFIC HYBRIFLEX CABLE FOR EACH SECTOR

HYBRIFLEX CABLE DETAIL

SCALE: 1" = 1'-0"

3 / S-3

entrex
communication services, inc.

6600 Rockledge Drive. Suite 550
Bethesda, MD 20817
Phone: (202)408-0960
Fax: (202)408-0961

SUBMITTALS

DATE	DESCRIPTION	REV.
10-09-18	CONSTRUCTION REVIEW	

SEAL:

Sprint
6391 SPRINT PARKWAY
OVERLAND PARK, KANSAS 66251

PROJECT NO:	1015.920
DESIGNER:	M.A.
ENGINEER:	M.M.

SCALE: AS SHOWN

WA54XC512
PEPCO TOWER 163S
1300 ASHTON ROAD
ASHTON, MD 20861

TITLE:

EQUIPMENT AND CABLE DETAILS

SHEET NUMBER:

S-3

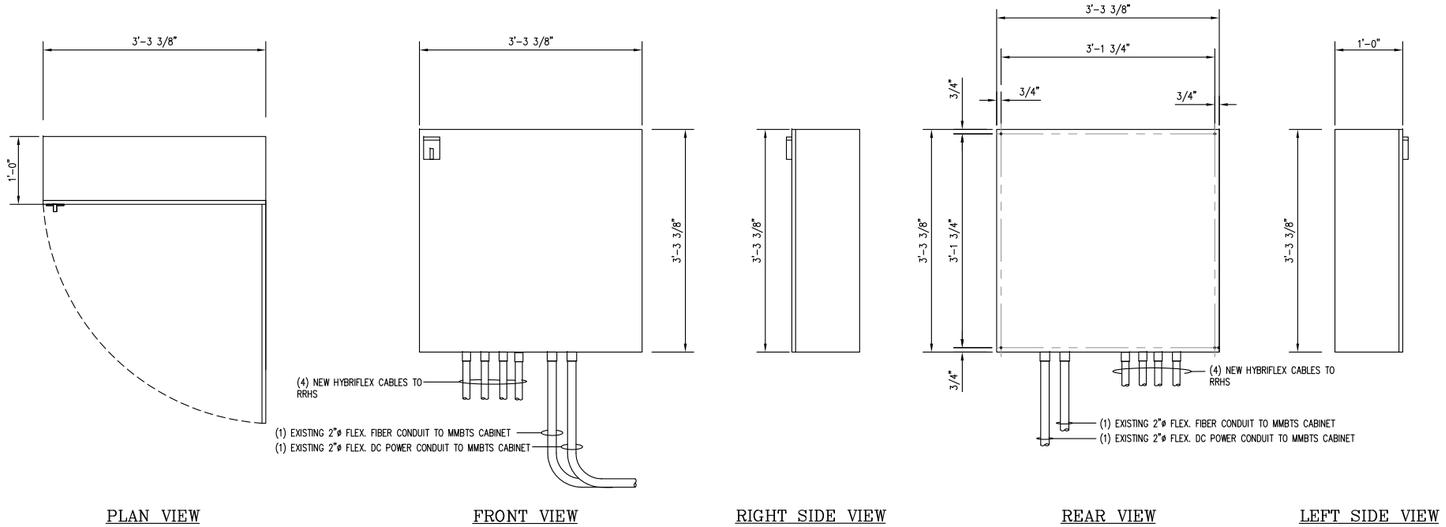

NOTE: DISTRIBUTION CABINET SHALL BE NEMA 3R RATED
CABINET WEIGHT = 150 LBS
SECURE CABINET TO WALL ON P1000 UNISTRUT
SCREWED INTO THE WALL STUD FLANGES

FIBER DISTRIBUTION CABINET DETAILS (1 / S-4)
SCALE: 3/4" = 1'-0"

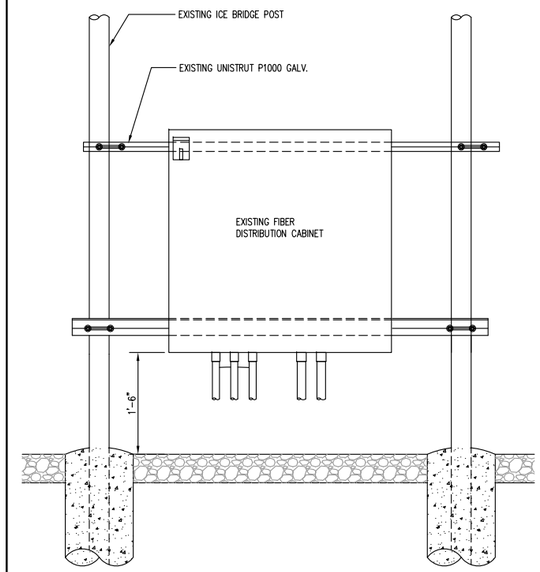

FIBER DISTRIBUTION MOUNTING CABINET DETAILS (2 / S-4)
SCALE: 3/4" = 1'-0"

entrex communication services, inc.
6600 Rockledge Drive, Suite 550
Bethesda, MD 20817
Phone: (202)408-0960
Fax: (202)408-0961

SUBMITTALS

DATE	DESCRIPTION	REV.
10-09-18	CONSTRUCTION REVIEW	

SEAL:

Sprint
8391 SPRINT PARKWAY
OVERLAND PARK, KANSAS 66251

PROJECT NO:	1015.920
DESIGNER:	M.A.
ENGINEER:	M.M.

SCALE: AS SHOWN

WA54XC512
PEPCO TOWER 163S
1300 ASHTON ROAD
ASHTON, MD 20861

TITLE:

FIBER DISTRIBUTION CABINET DETAILS

SHEET NUMBER:

S-4

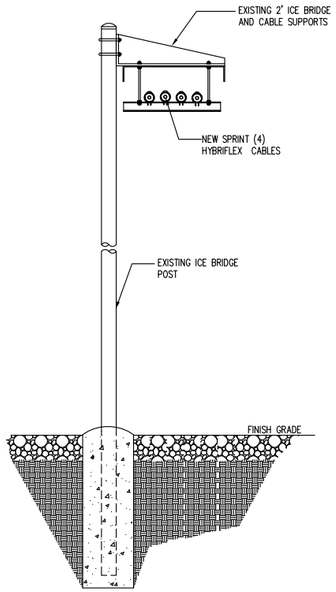

CABLE SUPPORT DETAIL (1 / S-5)
SCALE: 1"=1'-0"

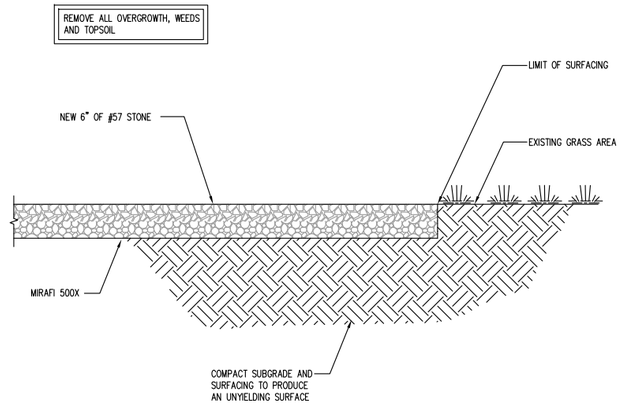

SITE SURFACING DETAIL (2 / S-5)
SCALE: 1 1/2"=1'-0"

STRUCTURAL NOTES

1. THE DESIGN REQUIREMENTS ARE PER THE 2015 INTERNATIONAL BUILDING CODE. THE WIND SPEED UTILIZED FOR DESIGN IS 115 MPH. THE TOWER IS ANALYZED/DESIGNED IN ACCORDANCE WITH ENERCON'S REQUIREMENTS BY OTHERS.

2. THE INFORMATION SHOWN ON THESE DRAWINGS WAS OBTAINED BY FIELD MEASUREMENT. THE GENERAL CONTRACTOR SHALL VERIFY ALL EXISTING CONDITIONS AND NOTIFY THE ARCHITECT OF ANY DISCREPANCIES PRIOR TO ORDERING MATERIALS OR PROCEEDING WITH CONSTRUCTION.

3. THE GENERAL CONTRACTOR AND HIS SUB CONSULTANTS SHALL BE RESPONSIBLE FOR OBTAINING ALL PERMITS AND INSPECTIONS THAT MAY BE REQUIRED FOR THE WORK INCLUDING ALL TRADE PERMITS.

4. STRUCTURAL STEEL SHALL CONFORM TO THE LATEST EDITION OF THE AISC SPECIFICATION FOR STRUCTURAL STEEL BUILDINGS – ALLOWABLE STRESS DESIGN AND PLASTIC DESIGN INCLUDING THE COMMENTARY AND THE AISC CODE OF STANDARD PRACTICE.

5. STRUCTURAL STEEL PLATES, CHANNELS AND ANGLES SHALL CONFORM TO ASTM A36. STRUCTURAL STEEL W SHAPES SHALL CONFORM TO ASTM A992. STRUCTURAL STEEL PIPES SHALL CONFORM TO ASTM A53 GRADE B. STRUCTURAL STEEL TUBING SHALL CONFORM TO ASTM A500 GRADE B. ALL STRUCTURAL STEEL COMPONENTS AND FABRICATED ASSEMBLIES SHALL BE HOT DIP GALVANIZED AFTER FABRICATION. COLD GALVANIZE ALL FIELD PUNCHED HOLES, FIELD CUT SURFACES OR SURFACES WHERE GALVANIZE SURFACE IS DAMAGED.

6. WELDING SHALL BE IN ACCORDANCE WITH THE AMERICAN WELDING SOCIETY (AWS) D1.1 STRUCTURAL WELDING CODE – STEEL (LATEST EDITION). WELD ELECTRODES SHALL BE E70XX UNLESS NOTED OTHERWISE.

7. STRUCTURAL THREADED FASTENERS FOR STEEL ANTENNA MOUNTING ASSEMBLIES SHALL CONFORM TO ASTM A307 OR ASTM A36. STRUCTURAL FASTENERS FOR STRUCTURAL STEEL FRAMING SHALL CONFORM TO ASTM A325. STRUCTURAL FASTENERS SHALL BE 5/8" DIAMETER BEARING TYPE CONNECTIONS WITH THE THREADS EXCLUDED FROM THE SHEAR PLANE FOR ANGLES. STRUCTURAL FASTENERS SHALL BE 3/4" DIAMETER BEARING TYPE CONNECTIONS WITH THE THREADS EXCLUDED FROM THE SHEAR PLANE FOR ANGLES AND 3/4" MINIMUM FOR ALL OTHER STRUCTURAL SHAPES. ALL EXPOSED STRUCTURAL FASTENERS, NUTS AND WASHERS SHALL BE HOT DIP GALVANIZED UNLESS OTHERWISE NOTED.

entrex communication services, inc.

6600 Rockledge Drive. Suite 550
Bethesda, MD 20817
Phone: (202)408-0960
Fax: (202)408-0961

SUBMITTALS

DATE	DESCRIPTION	REV.
10-09-18	CONSTRUCTION REVIEW	

SEAL:

Sprint
6391 SPRINT PARKWAY
OVERLAND PARK, KANSAS 66251

PROJECT NO: 1015.920
DESIGNER: M.A.
ENGINEER: M.M.

SCALE: AS SHOWN

WA54XC512
PEPCO TOWER 163S
1300 ASHTON ROAD
ASHTON, MD 20861

TITLE:

SITE DETAILS AND STRUCTURAL NOTES

SHEET NUMBER:

S-5

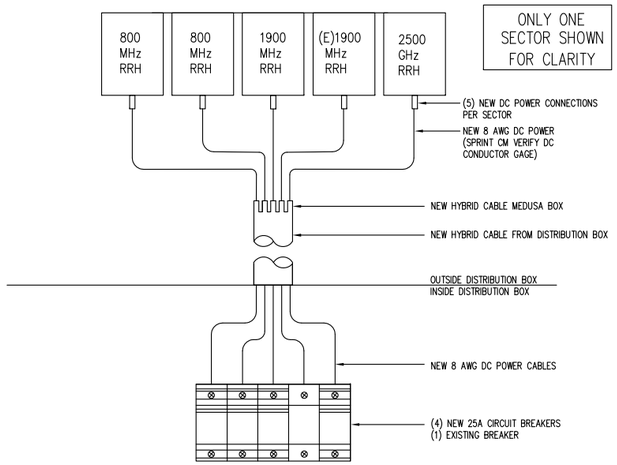

DC ONE-LINE DIAGRAM

SCALE: N.T.S.

1 / E-1

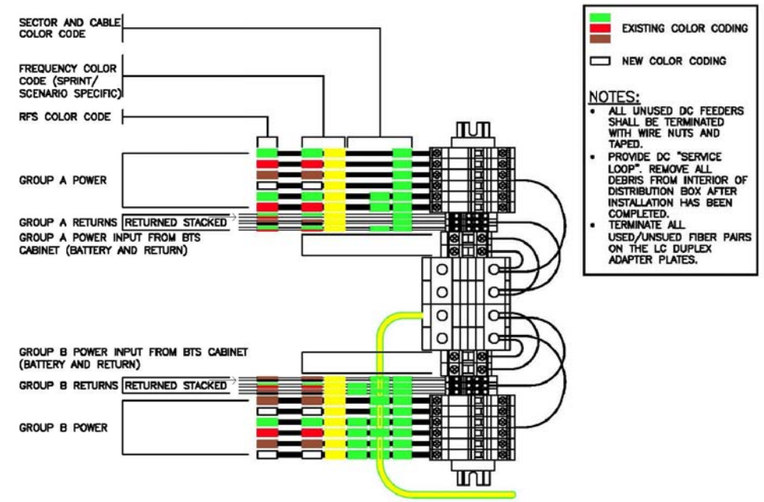

DC POWER DISTRIBUTION

SCALE: N.T.S

2 / E-1

entrex
communication services, inc.

6600 Rockledge Drive, Suite 550
Bethesda, MD 20817
Phone: (202)408-0960
Fax: (202)408-0961

SUBMITTALS

DATE	DESCRIPTION	REV.
10-09-18	CONSTRUCTION REVIEW	

SEAL:

Sprint
6391 SPRINT PARKWAY
OVERLAND PARK, KANSAS 66251

PROJECT NO:	1015.920
DESIGNER:	M.A.
ENGINEER:	A.S.

SCALE: AS SHOWN

WA54XC512
PEPCO TOWER 163S
1300 ASHTON ROAD
ASHTON, MD 20861

TITLE:

DC POWER DIAGRAMS

SHEET NUMBER:

E-1

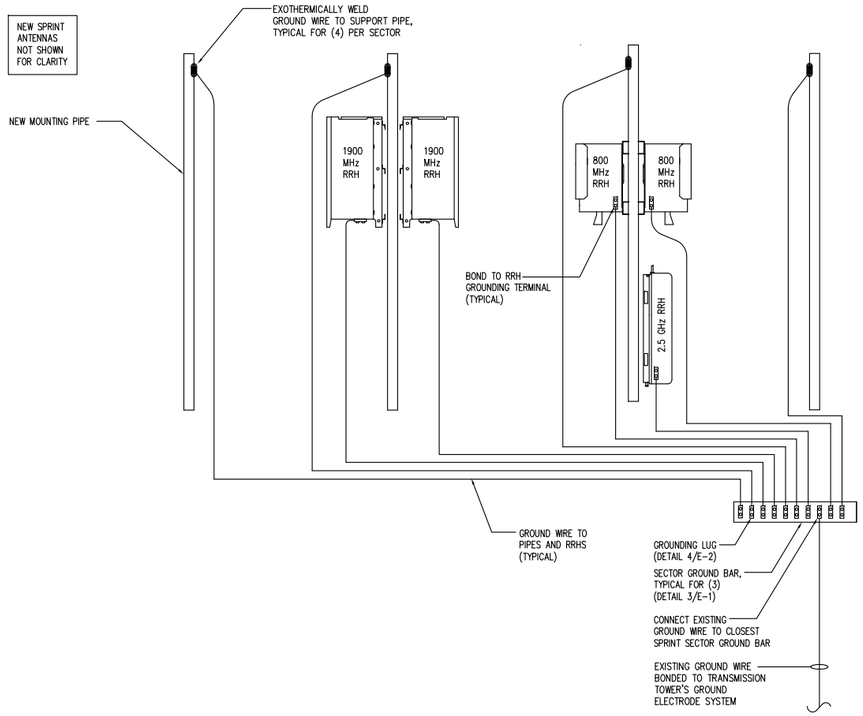

NOTES:

1. ALL GROUND WIRES SHOWN SHALL BE GREEN-INSULATED 2 AWG COPPER UNLESS NOTED OTHERWISE.

TYPICAL SECTOR GROUNDING CONNECTIONS

SCALE: N.T.S.

1 / E-2

GROUNDING NOTES

1. GROUNDING SHALL COMPLY WITH ARTICLE 250 OF NATIONAL ELECTRICAL CODE.
2. GROUND WIRES ABOVE GRADE SHALL BE #2 AWG GREEN-INSULATED STRANDED COPPER WIRE. GROUND WIRES BELOW GRADE SHALL BE #2 BARE TINNED SOLID COPPER WIRE UNLESS OTHERWISE NOTED.
3. GROUNDING CONNECTIONS SHALL BE EXOTHERMIC ("CADWELDS") TO GROUND RODS, GROUND RING WIRE AND GATE POSTS UNLESS NOTED OTHERWISE. CLEAN SURFACES TO SHINY METAL. WHERE GROUND WIRES ARE CADWELDED TO GALVANIZED SURFACES, SPRAY CADWELD WITH GALVANIZING PAINT.
4. GROUNDING CONNECTIONS TO GROUND BARS ARE TO BE TWO-HOLE STAINLESS STEEL MECHANICAL CONNECTORS WITH STAINLESS STEEL HARDWARE (INCLUDING SCREW SET.) CLEAN GROUND BAR TO SHINY METAL. AFTER MECHANICAL CONNECTION, TREAT WITH PROTECTIVE ANTIOXIDIZATION COATING.
5. GROUND HYBRIFLEX CABLE SHIELDS AT BOTH ENDS WITH MANUFACTURER'S GROUNDING KITS.
6. ROUTE GROUNDING CONDUCTORS ALONG THE SHORTEST AND STRAIGHTEST PATH POSSIBLE. BEND GROUNDING LEADS WITH A MINIMUM 8" RADIUS.
7. PROVIDE HEAT SHRINK ON ALL GROUNDS AT GROUND LUG TERMINATION. PRIOR TO INSTALLING LUGS ON GROUND WIRES, APPLY THOMAS & BETTS KOPR-SHIELD (TM OF JET LUBE INC.). PRIOR TO BOLTING GROUND WIRE LUGS TO GROUND BARS, APPLY KOPR-SHIELD OR EQUAL.
8. WHERE BARE COPPER GROUND WIRES ARE ROUTED FROM ANY CONNECTION ABOVE GRADE TO GROUND RING, INSTALL WIRE IN 3/4" PVC SLEEVE, FROM 1'-0" BELOW GRADE AND SEAL TOP WITH SILICONE MATERIAL.

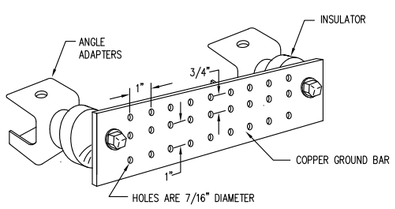

LEGEND

1. COPPER GROUND BAR, MANUFACTURED BY HARGER
2. GROUND BARS SHALL BE CAT. NO. GBIA-14416-J
   GBIA INDICATES GROUND BAR INCLUDING ANGLE ADAPTERS AND INSULATORS
   14416 INDICATES DIMENSIONS OF 1/4" THICK X 4" HIGH X 16" LONG
   J INDICATES FACTORY-DRILLED HOLE PATTERN SHOWN ABOVE
3. SECURE GROUND BAR TO UNDERSIDE OF PLATFORM GRATING

SECTOR GROUND BAR DETAIL

SCALE: N.T.S.

2 / E-2

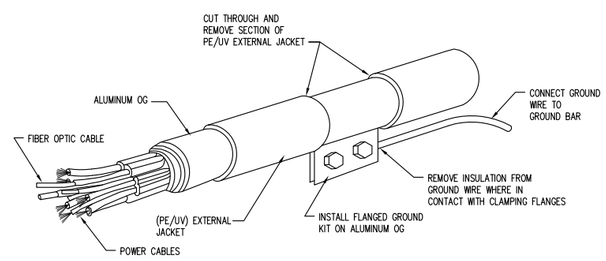

NOTES:

1. CLAMP #6 GROUND WIRE BETWEEN FLANGES AND FORM BOND WITH COMPRESSION HARDWARE PROVIDED WITH KIT.
2. FOLLOWING INSTALLATION OF GROUND KIT, WATERPROOF ASSEMBLY WITH WATERPROOFING KIT AND TAPE.

HYBRIFLEX GROUNDING KIT DETAIL

SCALE: N.T.S.

3 / E-2

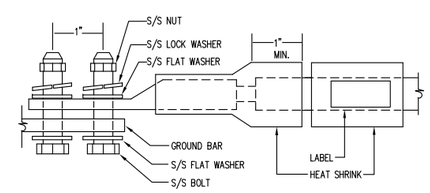

LUG NOTES:

1. ALL HARDWARE IS 18-8 STAINLESS STEEL INCLUDING LOCK WASHERS.
2. ALL HARDWARE SHALL BE S/S 3/8-INCH DIAMETER OR LARGER.
3. FOR GROUND BOND TO STEEL ONLY: INSERT A DRAGON-TOOTH WASHER BETWEEN LUG AND STEEL AND COAT ALL SURFACES WITH ANTI-OXIDIZATION COMPOUND PRIOR TO MATING.

LUG DETAIL

SCALE: NOT TO SCALE

4 / E-2

entrex communication services, inc.
6600 Rockledge Drive, Suite 550
Bethesda, MD 20817
Phone: (202)408-0960
Fax: (202)408-0961

SUBMITTALS

DATE	DESCRIPTION	REV.
10-09-18	CONSTRUCTION REVIEW	

SEAL:

Sprint
6391 SPRINT PARKWAY
OVERLAND PARK, KANSAS 66251

PROJECT NO: 1015.920
DESIGNER: M.A.
ENGINEER: A.S.
SCALE: AS SHOWN

WA54XC512
PEPCO TOWER 163S
1300 ASHTON ROAD
ASHTON, MD 20861

TITLE:

GROUNDING NOTES AND DETAILS

SHEET NUMBER:

E-2

THESE OUTLINE SPECIFICATIONS IN CONJUNCTION WITH THE SPRINT STANDARD CONSTRUCTION SPECIFICATIONS. INCLUDING CONTRACT DOCUMENTS AND THE CONSTRUCTION DRAWINGS DESCRIBE THE WORK TO BE PERFORMED BY THE CONTRACTOR.

SECTION 01 100 - SCOPE OF WORK

THE WORK:

SHALL COMPLY WITH APPLICABLE NATIONAL CODES AND STANDARDS LATEST EDITION, AND PORTIONS THEREOF.

PRECEDENCE:

SHOULD CONFLICTS OCCUR BETWEEN THE STANDARD CONSTRUCTION SPECIFICATIONS FOR WIRELESS SITES INCLUDING THE STANDARD CONSTRUCTION DETAILS FOR WIRELESS SITES AND THE CONSTRUCTION DRAWINGS, INFORMATION ON THE CONSTRUCTION DRAWINGS SHALL TAKE PRECEDENCE.

SITE FAMILIARITY:

CONTRACTOR SHALL BE RESPONSIBLE FOR FAMILIARIZING HIMSELF WITH ALL CONTRACT DOCUMENTS. FIELD CONDITIONS AND DIMENSIONS PRIOR TO PROCEEDING WITH CONSTRUCTION.

ON-SITE SUPERVISION:

THE CONTRACTOR SHALL SUPERVISE AND DIRECT THE WORK AND SHALL BE RESPONSIBLE FOR CONSTRUCTION MEANS. METHODS. TECHNIQUES. SEQUENCES. AND PROCEDURES IN ACCORDANCE WITH THE CONTRACT DOCUMENTS.

DRAWINGS. SPECIFICATIONS AND DETAILS REQUIRED AT JOB SITE:

THE CONSTRUCTION CONTRACTOR SHALL MAINTAIN A FULL SET OF THE CONSTRUCTION DRAWINGS AT THE JOB SITE FROM MOBILIZATION THROUGH CONSTRUCTION COMPLETION.

A. DETAILED ARE INTENDED TO SHOW DESIGN INTENT. PROVIDE ALL MATERIALS AND LABOR AS REQUIRED TO PROVIDE A COMPLETE AND FUNCTIONING SYSTEM. MODIFICATIONS MAY BE REQUIRED TO SUIT JOB DIMENSIONS OR CONDITIONS, AND SUCH MODIFICATIONS SHALL BE INCLUDED AS PART OF THE WORK.

B. CONTRACTOR SHALL NOTIFY SPRINT CONSTRUCTION MANAGER OF ANY VARIATIONS SURFACES UNLESS NOTED OTHERWISE, MODIFICATIONS MAY BE REQUIRED TO SUIT JOB DIMENSIONS OR CONDITIONS. AND SUCH MODIFICATIONS SHALL BE INCLUDED AS PART OF THE WORK.

C. MARK THE FIELD SET OF DRAWINGS IN RED, DOCUMENTING ANY CHANGES FROM THE CONSTRUCTION DOCUMENTS.

METHODS OF PROCEDURE (MOPS) FOR CONSTRUCTION:

CONTRACTOR SHALL PERFORM WORK AS DESCRIBED:

A. COAX COLOR CODING SWEEPS AND FIBER TESTING TS-0200 AND EL-0568.

B. CABLE LABELING EN-2012-00.

C. APPLICABLE INSTALLATION MOPS IDENTIFIED ELSEWHERE IN THE CONTRACT DOCUMENTS.

SECTION 01 200 - COMPANY FURNISHED MATERIAL AND EQUIPMENT:

COMPANY FURNISHED MATERIAL AND EQUIPMENT IS IDENTIFIED ON THE RF DATA SHEET IN THE CONSTRUCTION DRAWINGS.

CONTRACTOR IS RESPONSIBLE FOR SPRINT PROVIDED MATERIAL AND EQUIPMENT TO ENSURE IT IS PROTECTED AND HANDLED PROPERLY THROUGHOUT THE CONSTRUCTION DURATION.

CONTRACTOR IS RESPONSIBLE FOR RECEIPT OF SPRINT FURNISHED EQUIPMENT AT CELL SITE OR CONTRACTORS LOCATION. CONTRACTOR TO COMPLETE SHIPPING AND RECEIPT DOCUMENTATION IN ACCORDANCE WITH COMPANY PRACTICE.

SECTION 01 300 - CELL SITE CONSTRUCTION:

NOTICE TO PROCEED:

NO WORK SHALL COMMENCE PRIOR TO COMPANY'S WRITTEN NOTICE TO PROCEED AND THE ISSUANCE OF WORK ORDER.

SITE CLEANLINESS:

CONTRACTOR SHALL KEEP THE SITE FREE FROM ACCUMULATING WASTE MATERIAL, DEBRIS, AND TRASH. AT THE COMPLETION OF THE WORK, CONTRACTOR SHALL REMOVE FROM THE SITE ALL REMAINING RUBBISH, IMPLEMENTS, TEMPORARY FACILITIES, AND SURPLUS MATERIALS.

SECTION 01 400 - SUBMITTALS & TESTS:

ALTERNATES:

AT THE COMPANY'S REQUEST, ANY ALTERNATIVES TO THE MATERIALS OR METHODS SPECIFIED SHALL BE SUBMITTED TO SPRINTS CONSTRUCTION MANAGER FOR APPROVAL, SPRINT WILL REVIEW AND APPROVE ONLY THOSE REQUESTS MADE IN WRITING, NO VERBAL APPROVALS WILL BE CONSIDERED.

TESTS AND INSPECTIONS

A. THE CONTRACTOR SHALL BE RESPONSIBLE FOR ALL CONSTRUCTION TESTS, INSPECTIONS AND PROJECT DOCUMENTATION.

B. CONTRACTOR SHALL ACCOMPLISH TESTING INCLUDING BUT NOT LIMITED TO THE FOLLOWING:

1. COAX SWEEPS AND FIBER TESTS PER LATEST VERSION OF TS-0200 ANTENNA LINE ACCEPTANCE STANDARDS.
2. AGL, AZIMUTH AND DOWN TILT PROVIDE AN AUTOMATED REPORT UPLOADED TO SITERRA USING A COMMERCIAL MADE-FOR THE PURPOSE ELECTRONIC ANTENNA ALIGNMENT TOOL (AAT). INSTALLED AZIMUTH, CENTERLINE AND DOWN TILT T MUST CONFORM WITH RF CONFIGURATION DATA.
3. CONTRACTOR SHALL BE RESPONSIBLE FOR ANY AND ALL CORRECTIONS TO ANY WORK IDENTIFIED AS UNACCEPTABLE IN SITE INSPECTION ACTIVITIES AND/OR AS A RESULT OF TESTING.
4. ALL TESTING REQUIRED BY APPLICABLE INSTALLATION MOPS.

C. REQUIRED CLOSE OUT DOCUMENTATION INCLUDES, BUT IS NOT LIMITED TO THE FOLLOWING:

1. AZIMUTH, DOWN TILT T, AGL FROM SUNSIGHT INSTRUMENTS – ANTENNA ALIGN ALIGNMENT TOOL (AAT).
2. SWEEP AND FIBER TESTS.
3. SCALEABLE BAR CODE PHOTOGRAPHS OF TOWER TOP AND INACCESSIBLE SERIALIZED EQUIPMENT.
4. ALL AVAILABLE JURISDICTIONAL PERMIT AND OCCUPANCY INFORMATION.
5. PDF SCAN OF RED LINES PRODUCED IN FIELD.
6. A PDF SCAN OF RED LINE MARKUPS SUITABLE FOR USE IN ELECTRONIC AS-BUILT DRAWING PRODUCTION.
7. LIEN WAIVERS.
8. FINAL PAYMENT APPLICATION.
9. REQUIRED FINAL CONSTRUCTION PHOTOS.
10. CONSTRUCTION AND COMMISSIONING CHECKLIST COMPLETE WITH NO DEFICIENT ITEMS.
11. APPLICABLE POST NTP TASKS INCLUDING DOCUMENT UPLOADS COMPLETED IN SITERRA (SPRINTS DOCUMENT REPOSITORY OF RECORD).
12. CLOSE OUT PHOTOGRAPHS AND CLOSE OUT CHECKLIST: SPRINT WILL PROVIDE. SEPARATE GUIDANCE.

SECTION 01 700 - ANTENNA ASSEMBLY, REMOTE RADIO UNITS AND CABLE INSTALLATION:

SUMMARY:

THIS SECTION SPECIFIES INSTALLATION OF ANTENNAS, RRU'S, AND CABLE EQUIPMENT. INSTALLATION AND TESTING OF COAXIAL FIBER CABLE.

ANTENNAS AND RRU'S:

THE NUMBER AND TYPE OF ANTENNAS AND RRU'S TO BE INSTALLED IS DETAILED ON THE CONSTRUCTION DRAWINGS.

HYBRID CABLE:

HYBRID CABLE WILL BE DC/FIBER AND FURNISHED FOR INSTALLATION AT EACH SITE, CABLE SHALL BE INSTALLED PER THE CONSTRUCTION DRAWINGS AND THE APPLICABLE MANUFACTURER'S REQUIREMENTS.

JUMPERS AND CONNECTORS:

FURNISH AND INSTALL ½ INCH COAX JUMPER CABLES BETWEEN THE RRU'S AND ANTENNAS, JUMPERS SHALL BE TYPE LDF 4. FLC 12-50, CR 540 OR FXL 540. SUPER-FLEX CABLES ARE NOT ACCEPTABLE. JUMPERS BETWEEN THE RRU'S AND ANTENNAS OR TOWER TOP AMPLIFIERS SHALL CONSIST OF 1/2 INCH FOAM DIELECTRIC, OUTDOOR RATED COAXIAL CABLE, MIN LENGTH FOR JUMPER SHALL BE 10'-0".

REMOTE ELECTRICAL TILT (RET) CABLES:

MISCELLANEOUS:

INSTALL SPLITTERS, COMBINERS, FILTERS PER RF DATA SHEET FURNISHED BY SPRINT.

ANTENNA INSTALLATION:

THE CONTRACTOR SHALL ASSEMBLE ALL ANTENNAS ON SITE IN ACCORDANCE WITH THE INSTRUCTIONS SUPPLIED BY THE MANUFACTURER. ANTENNA HEIGHT, AZIMUTH, AND FEED ORIENTATION INFORMATION SHALL BE A DESIGNATED ON THE CONSTRUCTION DRAWINGS.

A. THE CONTRACTOR SHALL POSITION THE ANTENNA ON TOWER PIPE MOUNTS SO THAT THE BOTTOM STRUT IS LEVEL, THE PIPE MOUNTS SHALL BE PLUMB TO WITHIN 1 DEGREE.

B. ANTENNA MOUNTING REQUIREMENTS: PROVIDE ANTENNA MOUNTING HARDWARE AS INDICATED ON THE DRAWINGS.

HYBRID CABLE INSTALLATION:

A. THE CONTRACTOR SHALL ROUTE. TEST. AND INSTALL ALL CABLES AS INDICATED ON THE CONSTRUCTION DRAWINGS AND IN ACCORDANCE WITH THE MANUFACTURER'S RECOMMENDATIONS.

B. THE INSTALLED RADIUS OF THE CABLES SHALL NOT BE LESS THAN THE MANUFACTURER'S SPECIFICATIONS FOR BENDING RADIUS.

C. EXTREME CARE SHALL BE TAKEN TO AVOID DAMAGE TO THE CABLES DURING HANDLING AND INSTALLATION.

1. FASTENING MAIN HYBRID CABLES: ALL CABLES SHALL BE INSTALLED INSIDE MONOPOLE WITH CABLE SUPPORT GRIPS AS REQUIRED BY THE MANUFACTURER.

2. FASTENING INDIVIDUAL FIBER AND DC CABLES ABOVE BREAKOUT ENCLOSURE (MEDUSA), WITHIN THE MMBTS CABINET AND ANY INTERMEDIATE DISTRIBUTION BOXES:

a. FIBER I SUPPORT FIBER BUNDLES USING 1/2" VELCRO STRAPS OF THE REQUIRED LENGTH @ 18" OC. STRAPS SHALL BE UV, OIL AND WATER RESISTANT AND SUITABLE FOR INDUSTRIAL INSTALLATIONS AS MANUFACTURED BY TEXTOL OR APPROVED EQUAL.

b. DC: SUPPORT DC BUNDLES WITH ZIP TIES OF THE ADEQUATE LENGTH, ZIP TIES TO BE UV STABILIZED, BLACK NYLON, WITH TENSILE STRENGTH AT 12,000 PSI AS MANUFACTURED BY NELCO PRODUCTS OR EQUAL.

3. FASTENING JUMPERS: SECURE JUMPERS TO THE SIDE ARMS OR HEAD FRAMES USING STAINLESS STEEL TIE WRAPS OR STAINLESS STEEL BUTTERFLY CLIPS.

4. CABLE INSTALLATION:

a. INSPECT CABLE PRIOR TO USE FOR SHIPPING DAMAGE, NOTIFY THE CONSTRUCTION MANAGER.

b. CABLE ROUTING: CABLE INSTALLATION SHALL BE PLANNED TO ENSURE THAT THE LINES WILL BE PROPERLY ROUTED IN THE CABLE ENVELOPE AS INDICATED ON THE DRAWINGS. AVOID TWISTING AND CROSSOVERS.

c. HOIST CABLE USING PROPER HOISTING GRIPS. DO NOT EXCEED MANUFACTURERS' RECOMMENDED MAXIMUM BEND RADIUS.

5. GROUNDING OF TRANSMISSION LINES: ALL TRANSMISSION LINES SHALL BE GROUNDED AS INDICATED ON DRAWINGS.

6. HYBRID CABLE COLOR CODING: ALL COLOR CODING SHALL BE AS REQUIRED IN CURRENT VERSION OF TS0200.

7. HYBRID CABLE LABELING: INDIVIDUAL HYBRID AND DC BUNDLES SHALL BE LABELED ALPHA-NUMERICALLY ACCORDING TO SPRINT CELL SITE ENGINEERING NOTICE – EN 2012-001, REV 1.

entrex
communication services, inc.

6600 Rockledge Drive. Suite 550
Bethesda, MD 20817
Phone: (202)408-0960
Fax: (202)408-0961

SUBMITTALS

DATE	DESCRIPTION	REV.
10-09-18	CONSTRUCTION REVIEW	

SEAL:

Sprint
6391 SPRINT PARKWAY
OVERLAND PARK, KANSAS 66251

PROJECT NO:	1015.920
DESIGNER:	M.A.
ENGINEER:	M.M.

SCALE: AS SHOWN

WA54XC512
PEPCO TOWER 163S
1300 ASHTON ROAD
ASHTON, MD 20861

TITLE:

SPECIFICATIONS

SHEET NUMBER:

SP-1

WEATHERPROOFING EXTERIOR CONNECTORS AND HYBRID CABLE GROUND KITS:

A. ALL FIBER L COAX CONNECTORS AND GROUND KITS SHALL BE WEATHERPROOFED.

WEATHERPROOF USING ONE OF THE FOLLOWING METHODS. ALL INSTALLATIONS MUST BE PERFORMED IN ACCORDANCE WITH THE MANUFACTURER'S RECOMMENDATIONS AND INDUSTRY BEST PRACTICES.

1. COLD SHRINK: ENCOMPASS CONNECTOR IN COLD SHRINK TUBING AND PROVIDE A DOUBLE WRAP OF 2" ELECTRICAL TAPE EXTENDING 2" BEYOND TUBING. PROVIDE 3M COLD SHRINK CXS SERIES DR EQUAL.

2. SELF-AMALGAMATING TAPE: CLEAN SURFACES, APPLY A DOUBLE WRAP OF SELF-AMALGAMATING TAPE 2" BEYOND CONNECTOR. APPLY A SECOND WRAP OF SELF-AMALGAMATING TAPE IN OPPOSITE DIRECTION. APPLY DOUBLE 'WRAP OF 2" WIDE ELECTRICAL TAPE EXTENDING 2" BEYOND THE SELF -AMALGAMATING TAPE.

3. 3M SLIM LOCK CLOSURE 716: SUBSTITUTIONS WILL NOT BE ALLOWED.

4. OPEN FLAME ON JOB SITE IS NOT ACCEPTABLE.

SECTION 11 800 - INSTALLATION OF MULTIMODAL BASE STATIONS (MMBS) AND RELATED EQUIPMENT:

SUMMARY:

A. THIS SECTION SPECIFIES MMBS CABINETS, POWER CABINETS, AND INTERNAL EQUIPMENT INCLUDING BUT NOT LIMITED TO RECTIFIERS, POWER DISTRIBUTION UNITS, BASE BAND UNITS, SURGE ARRESTORS, BATTERIES, AND SIMILAR EQUIPMENT FURNISHED BY THE COMPANY FOR INSTALLATION BY THE CONTRACTOR (OFCI).

B. CONTRACTOR SHALL PROVIDE AND INSTALL ALL MISCELLANEOUS MATERIALS AND PROVIDE ALL LABOR REQUIRED FOR INSTALLATION EQUIPMENT IN EXISTING CABINET DR NEW CABINET AS SHOWN ON DRAWINGS AND AS REQUIRED BY THE APPLICABLE INSTALLATION MOPS.

C. COMPLY WITH MANUFACTURERS INSTALLATION AND START-UP REQUIREMENTS.

DC CIRCUIT BREAKER LABELING:

A. NEW DC CIRCUIT IS REQUIRED IN MMBTS CABINET AND SHALL BE CLEARLY IDENTIFIED AS TO RRU BEING SERVICED.

SECTION 26 100 - BASIC ELECTRICAL REQUIREMENTS:

SUMMARY:

THIS SECTION SPECIFIES BASIC ELECTRICAL REQUIREMENTS FDR SYSTEMS AND COMPONENTS.

QUALITY ASSURANCE:

A. ALL EQUIPMENT FURNISHED UNDER DIVISION 26 SHALL CARRY UL LABELS AND LISTINGS WHERE SUCH LABELS AND LISTINGS ARE AVAILABLE IN THE INDUSTRY.

B. MANUFACTURERS OF EQUIPMENT SHALL HAVE A MINIMUM OF THREE YEARS EXPERIENCE WITH THEIR EQUIPMENT INSTALLED AND OPERATING IN THE FIELD IN A USE SIMILAR TO THE PROPOSED USE FOR THIS PROJECT.

C. MATERIALS AND EQUIPMENT: ALL MATERIALS AND EQUIPMENT SPECIFIED IN DIVISION 26 OF THE SAME TYPE SHALL BE OF THE SAME MANUFACTURER AND SHALL BE NEW, OF THE BEST QUALITY AND DESIGN, AND FREE FROM DEFECTS.

SUPPORTING DEVICES:

A ALL EQUIPMENT FURNISHED UNDER DIVISION 26 SHALL CARRY UL LABELS AND LISTINGS WHERE SUCH LABELS AND LISTINGS ARE AVAILABLE IN THE INDUSTRY.

B. MANUFACTURERS OF EQUIPMENT SHALL HAVE A MINIMUM OF THREE YEARS EXPERIENCE WITH THEIR EQUIPMENT INSTALLED AND OPERATING IN THE FIELD IN A USE SIMILAR TO THE PROPOSED USE FOR THIS PROJECT.

C. MATERIALS AND EQUIPMENT:
ALL MATERIALS AND EQUIPMENT SPECIFIED IN DIVISION 26 OF THE SAME TYPE SHALL BE OF THE SAME MANUFACTURER AND SHALL BE NEW, OF THE BEST QUALITY AND DESIGN, AND FREE FROM DEFECTS.

SUPPORTING DEVICES:

A. MANUFACTURED STRUCTURAL SUPPORT MATERIALS: SUBJECT TO COMPLIANCE WITH REQUIREMENTS, PROVIDE PRODUCTS BY THE FOLLOWING:

1. ALLIED TUBE AND CONDUIT.

2. B-LINE SYSTEMS.

3. UNISTRUT DIVERSIFIED PRODUCTS.

4. THOMAS & BETTS.

B. FASTENERS: TYPES, MATERIALS, AND CONSTRUCTION FEATURES AS FOLLOWS:

1. EXPANSION ANCHORS: CARBON STEEL WEDGE OR SLEEVE TYPE.

2. POWER-DRIVEN THREADED STUDS: HEAT-TREATED STEEL, DESIGNED SPECIFICALLY FOR THE INTENDED SERVICE.

3. FASTEN BY MEANS OF WOOD SCREWS ON WOOD.

4. TOGGLE BOLTS ON HOLLOW MASONRY UNITS.

5. CONCRETE INSERTS OR EXPANSION BOLTS ON CONCRETE OR SOLID MASONRY.

6. MACHINE SCREWS, WELDED THREADED STUDS, OR SPRING-TENSION CLAMPS ON STEEL.

7. EXPLOSIVE DEVICES FOR ATTACHING HANGERS TO STRUCTURE SHALL NOT BE PERMITTED.

8. DO NOT WELD CONDUIT, PIPE STRAPS, OR ITEMS OTHER THAN THREADED STUDS TO STEEL STRUCTURES.

9. IN PARTITIONS OF LIGHT STEEL CONSTRUCTION, USE SHEET METAL SCREWS.

SUPPORTING DEVICES:

A. INSTALL SUPPORTING DEVICES TO FASTEN ELECTRICAL COMPONENTS SECURELY AND PERMANENTLY IN ACCORDANCE WITH NEC.

B. COORDINATE WITH THE BUILDING STRUCTURAL SYSTEM AND WITH OTHER TRADES.

C. UNLESS OTHERWISE INDICATED ON THE DRAWINGS, FASTEN ELECTRICAL ITEMS AND THEIR SUPPORTING HARDWARE SECURELY TO THE STRUCTURE IN ACCORDANCE WITH THE FOLLOWING:

D. ENSURE THAT THE LOAD APPLIED BY ANY FASTENER DOES NOT EXCEED 25 PERCENT OF THE PROOF TEST LOAD.

E. USE VIBRATION AND SHOCK-RESISTANT FASTENERS FOR ATTACHMENTS TO CONCRETE SLABS.

ELECTRICAL IDENTIFICATION:

A. UPDATE AND PROVIDE TYPED CIRCUIT BREAKER SCHEDULES IN THE MOUNTING BRACKET, INSIDE DOORS OF AC PANEL BOARDS WITH ANY CHANGES MADE TO THE AC SYSTEM.

B. BRANCH CIRCUITS FEEDING AVIATION OBSTRUCTION LIGHTING EQUIPMENT SHALL BE CLEARLY IDENTIFIED AS SUCH AT THE BRANCH CIRCUIT PANELBOARD.

SECTION 26 200 - ELECTRICAL MATERIALS AND EQUIPMENT CONDUIT:

A. RIGID GALVANIZED STEEL (RGS) CONDUIT SHALL BE USED FOR EXTERIOR LOCATIONS ABOVE GROUND AND IN UNFINISHED INTERIOR LOCATIONS AND FOR ENCASED RUNS IN CONCRETE. RIGID CONDUIT AND FITTINGS SHALL BE STEEL, COATED WITH ZINC EXTERIOR AND INTERIOR BY THE HOT DIP GALVANIZING PROCESS. CONDUIT SHALL BE PRODUCED TO ANSI SPECIFICATIONS C80.1, FEDERAL SPECIFICATION WW-C-581 AND SHALL BE LISTED WITH THE UNDERWRITERS' LABORATORIES. FITTINGS SHALL BE THREADED - SET SCREW OR COMPRESSION FITTINGS WILL NOT BE ACCEPTABLE. RGS CONDUITS SHALL BE MANUFACTURED BY ALLIED, REPUBLIC OR WHEATLAND.

B. UNDERGROUND CONDUIT IN CONCRETE SHALL BE POLYVINYL CHLORIDE (PVC) SUITABLE FOR DIRECT BURIAL AS APPLICABLE. JOINTS SHALL BE BELLED, AND FLUSH SOLVENT WELDED IN ACCORDANCE WITH MANUFACTURER'S INSTRUCTIONS. CONDUIT SHALL BE CARLON ELECTRICAL PRODUCTS OR APPROVED EQUAL.

C. TRANSITIONS BETWEEN PVC AND RIGID (RGS) SHALL BE MADE WITH PVC COATED METALLIC LONG SWEEP RADIUS ELBOWS.

D. EMT OR RIGID GALVANIZED STEEL CONDUIT MAY BE USED IN FINISHED SPACES CONCEALED IN WALLS AND CEILINGS. EMT SHALL BE MILD STEEL, ELECTRICALLY WELDED. ELECTRO-GALVANIZED OR HOT-DIPPED GALVANIZED AND PRODUCED TO ANSI SPECIFICATION C80.3, FEDERAL SPECIFICATION WW-C-563, AND SHALL BE UL LISTED. EMT SHALL BE MANUFACTURED BY ALLIED, REPUBLIC OR WHEATLAND, OR APPROVED EQUAL, FITTINGS SHALL BE METALLIC COMPRESSION. SET SCREW CONNECTIONS SHALL NOT BE ACCEPTABLE,

E. LIQUID TIGHT FLEXIBLE METALLIC CONDUIT SHALL BE USED FOR FINAL CONNECTION TO EQUIPMENT. FITTINGS SHALL BE METALLIC GLAND TYPE COMPRESSION FITTINGS, MAINTAINING THE INTEGRITY OF CONDUIT SYSTEM. SET SCREW CONNECTIONS SHALL NOT BE ACCEPTABLE. MAXIMUM LENGTH OF FLEXIBLE CONDUIT SHALL NOT EXCEED 6-FEET. LFMC SHALL BE PROTECTED AND SUPPORTED AS REQUIRED BY NEC. MANUFACTURERS OF FLEXIBLE CONDUITS SHALL BE CAROL, ANACONDA METAL HOSE OR UNIVERSAL METAL HOSE, OR APPROVED EQUAL.

F. MINIMUM SIZE CONDUIT SHALL BE 3/4 INCH (21MM).

HUBS AND BOXES:

A. AT ENTRANCES TO CABINETS OR OTHER EQUIPMENT NOT HAVING INTEGRAL THREADED HUBS PROVIDE METALLIC THREADED HUBS OF THE SIZE AND CONFIGURATION REQUIRED. HUB SHALL INCLUDE LOCK NUT AND NEOPRENE O-RING SEAL. PROVIDE IMPACT RESISTANT 105 DEGREE C PLASTIC BUSHINGS TO PROTECT CABLE INSULATION.

B. CABLE TERMINATION FITTINGS FOR CONDUIT

1. CABLE TERMINATORS FOR RGS CONDUITS SHALL BE TYPE CRC BY O-Z/GEDNEY OR EQUAL BY ROX TEC.

2. CABLE TERMINATORS FOR LFMC SHALL BE ETCO - CL2075 OR MADE FOR THE PURPOSE PRODUCTS BY ROXTEC.

C. EXTERIOR PULL BOXES AND PULL BOXES IN INTERIOR INDUSTRIAL AREAS SHALL BE PLATED CAST ALLOY, HEAVY DUTY, WEATHERPROOF, DUST PROOF, WITH GASKET, PLATED IRON ALLOY COVER AND STAINLESS STEEL COVER SCREWS, CROUSE -HINDS WAB SERIES OR EQUAL.

D. CONDUIT OUTLET BODIES SHALL BE PLATED CAST ALLOY WITH SIMILAR GASKETED COVERS. OUTLET BODIES SHALL BE OF THE CONFIGURATION AND SIZE SUITABLE FOR THE APPLICATION. PROVIDE CROUSE-HINDS FORM 8 OR EQUAL.

E. MANUFACTURER FOR BOXES AND COVERS SHALL BE HOFFMAN, SQUARE "D", CROUSE-HINDS, COOPER, ADALET, APPLETON, O-Z GEDNEY, RACO, OR APPROVED EQUAL.

SUPPLEMENTAL GROUNDING SYSTEM:

A. FURNISH AND INSTALL A SUPPLEMENTAL GROUNDING SYSTEM TO THE EXTENT INDICATED ON THE DRAWINGS. SUPPORT SYSTEM WITH NON-MAGNETIC STAINLESS STEEL CLIPS WITH RUBBER GROMMETS. GROUNDING CONNECTORS SHALL BE TINNED COPPER WIRE, SIZES AS INDICATED ON THE DRAWINGS. PROVIDE STRANDED OR SOLID BARE OR INSULATED CONDUCTORS EXCEPT AS OTHERWISE NOTED.

B. SUPPLEMENTAL GROUNDING SYSTEM: ALL CONNECTIONS TO BE MADE WITH EXOTHERMIC WELDS, EXCEPT AT EQUIPMENT USE LUGS OR OTHER AVAILABLE GROUNDING MEANS AS REQUIRED BY MANUFACTURER; AT GROUND BARS USE TWO HOLE SPADES WITH NO OX.

C. STOLEN GROUND-BARS: IN THE EVENT OF STOLEN GROUND BARS, CONTACT SPRINT CM FOR REPLACEMENT INSTRUCTION USING THREADED ROD KITS.

EXISTING STRUCTURE:

A. EXISTING EXPOSED WIRING AND ALL EXPOSED OUTLETS, RECEPTACLES, SWITCHES, DEVICES, BOXES, AND OTHER EQUIPMENT THAT ARE NOT TO BE UTILIZED IN THE COMPLETED PROJECT SHALL BE REMOVED OR DE-ENERGIZED AND CAPPED IN THE WALL, CEILING, OR FLOOR SO THAT THEY ARE CONCEALED AND SAFE. WALL, CEILING, OR FLOOR SHALL BE PATCHED TO MATCH THE ADJACENT CONSTRUCTION.

CONDUIT AND CONDUCTOR INSTALLATION:

A. CONDUITS SHALL BE FASTENED SECURELY IN PLACE WITH APPROVED NON-PERFORATED STRAPS AND HANGERS. EXPLOSIVE DEVICES FOR ATTACHING HANGERS TO STRUCTURE WILL NOT BE PERMITTED. CLOSELY FOLLOW THE LINES OF THE STRUCTURE. MAINTAIN CLOSE PROXIMITY TO THE STRUCTURE AND KEEP CONDUITS IN TIGHT ENVELOPES. CHANGES IN DIRECTION TO ROUTE AROUND OBSTACLES SHALL BE MADE WITH CONDUIT OUTLET BODIES. CONDUIT SHALL BE INSTALLED IN A NEAT AND WORKMANLIKE MANNER, PARALLEL AND PERPENDICULAR TO STRUCTURE WALL AND CEILING LINES. ALL CONDUIT SHALL BE FISHED TO CLEAR OBSTRUCTIONS. ENDS OF CONDUITS SHALL BE TEMPORARILY CAPPED TO PREVENT CONCRETE, PLASTER DR DIRT FROM ENTERING. CONDUITS SHALL BE RIGIDLY CLAMPED TO BOXES BY GALVANIZED MALLEABLE IRON BUSHING ON INSIDE AND GALVANIZED MALLEABLE IRON LOCK NUT ON OUTSIDE AND INSIDE.

B. CONDUCTORS SHALL BE PULLED IN ACCORDANCE WITH ACCEPTED GOOD PRACTICE.

entrex
communication services, inc.
6600 Rockledge Drive. Suite 550
Bethesda, MD 20817
Phone: (202)408-0960
Fax: (202)408-0961

SUBMITTALS

DATE	DESCRIPTION	REV.
10-09-18	CONSTRUCTION REVIEW	

SEAL:

Sprint
6391 SPRINT PARKWAY
OVERLAND PARK, KANSAS 66251

PROJECT NO:	1015.920
DESIGNER:	M.A.
ENGINEER:	M.M.

SCALE: AS SHOWN

WA54XC512
PEPCO TOWER 163S
1300 ASHTON ROAD
ASHTON, MD 20861

TITLE:

SPECIFICATIONS

SHEET NUMBER:

SP-2

EXISTING 800/1900 MHz INSTALLATION	NEW 2.5 GHz INSTALLATION
A– EXISTING 2" DC POWER (2AWGx2) B– EXISTING 2" FIBER (6 FIBER 7MM) C– EXISTING 1.5" BATTERY ALARM D– EXISTING 2" DC POWER	E– NEW 2" CPRI FIBER (9 FIBER 7MM) F– NEW 4 HYBRIFLEX CABLES

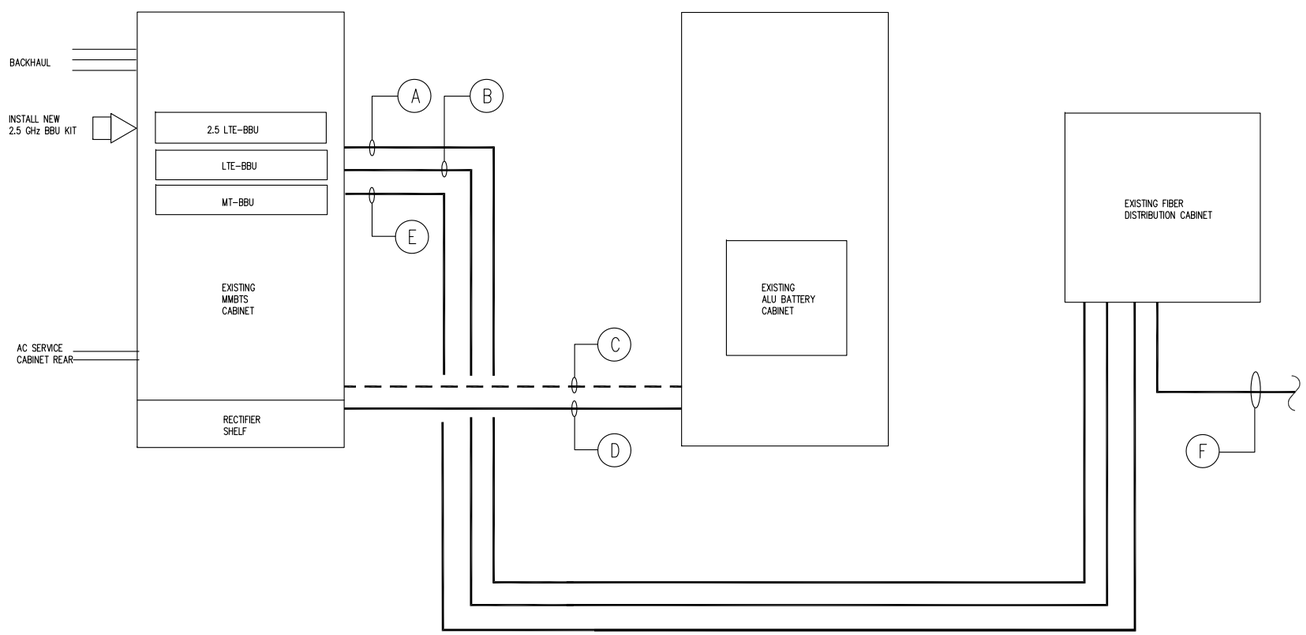

EQUIPMENT CABLING SCHEMATIC (1 / SP-3)
SCALE: N.T.S.

entrex
communication services, inc.
6600 Rockledge Drive, Suite 550
Bethesda, MD 20817
Phone: (202)408-0960
Fax: (202)408-0961

SUBMITTALS

DATE	DESCRIPTION	REV.
10-09-18	CONSTRUCTION REVIEW	

SEAL:

Sprint
6391 SPRINT PARKWAY
OVERLAND PARK, KANSAS 66251

PROJECT NO:	1015.920
DESIGNER:	M.A.
ENGINEER:	M.M.

SCALE: AS SHOWN

WA54XC512
PEPCO TOWER 163S
1300 ASHTON ROAD
ASHTON, MD 20861

TITLE:

EQUIPMENT CABLING SCHEMATIC

SHEET NUMBER:

SP-3

TECHNOLOGY COLOR CODE	FIRST RING	SECOND RING
800 #1	YELLOW	GREEN
1900 #1	YELLOW	RED
1900 #2	YELLOW	BROWN
1900 #3	YELLOW	BLUE
1900 #4	YELLOW	GREY
800 #1	YELLOW	ORANGE
2500 #1	YELLOW	WHITE
2500 #2	YELLOW	PURPLE

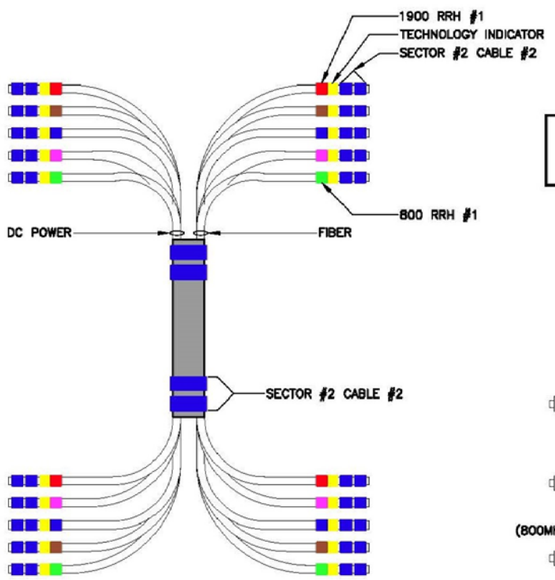

COLOR BANDING AT UPPER TERMINATION TO BE 3" WIDE

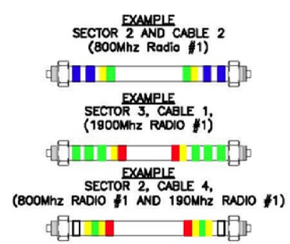

2500MHz RADIO CALIBRATION CABLE COLOR CODE

2500MHz #1 CAL CABLE – SECTOR	CABLE	FIRST RING	SECOND RING	THIRD RING	FOURTH RING	FIFTH RING	SIXTH RING
1 ALPHA	1	YELLOW		YELLOW	WHITE		
2 BETA	2	YELLOW	YELLOW		YELLOW	WHITE	
3 GAMMA	3	YELLOW	YELLOW	YELLOW		YELLOW	WHITE

2500MHz #2 CAL CABLE – SECTOR	CABLE	FIRST RING	SECOND RING	THIRD RING	FOURTH RING	FIFTH RING	SIXTH RING
1 ALPHA	1	YELLOW		YELLOW	PURPLE		
2 BETA	2	YELLOW	YELLOW		YELLOW	PURPLE	
3 GAMMA	3	YELLOW	YELLOW	YELLOW		YELLOW	PURPLE

INFORMATION TAKEN FROM SPRINT'S TECHNICAL SPECIFICATIONS "ANTENNA TRANSMISSION LINE ACCEPTANCE STANDARDS, LATEST VERSION, COPYRIGHT® 2014 SPRINT CORPORATION

2.5 GHz CABLE COLOR CODE DETAILS (1 / SP-4)
SCALE: N.T.S

entrex communication services, inc.
6600 Rockledge Drive, Suite 550
Bethesda, MD 20817
Phone: (202)408-0960
Fax: (202)408-0961

SUBMITTALS

DATE	DESCRIPTION	REV.
10-09-18	CONSTRUCTION REVIEW	

SEAL:

Sprint
6391 SPRINT PARKWAY
OVERLAND PARK, KANSAS 66251

PROJECT NO: 1015.920
DESIGNER: M.A.
ENGINEER: M.M.
SCALE: AS SHOWN

WA54XC512
PEPCO TOWER 163S
1300 ASHTON ROAD
ASHTON, MD 20861

TITLE:
2.5 GHz CABLE COLOR CODE DETAIL

SHEET NUMBER:
SP-4

BTS to Distribution Box Fiber Connectivity

Alcatel-Lucent	5/17/2014	V6.3

eCCM2-HR

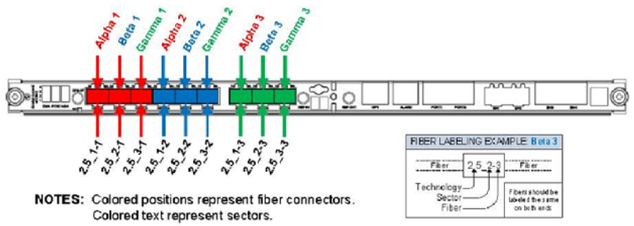

NOTES: Colored positions represent fiber connectors.
Colored text represent sectors.

Distribution Box Fiber Panel

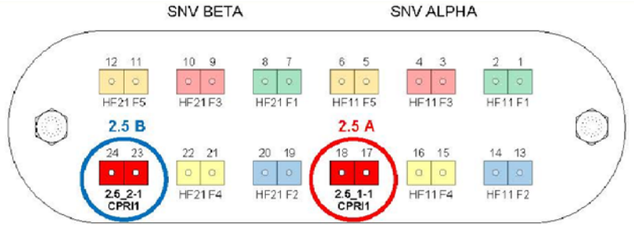

NOTES: Colored rings represent sectors.
Colored positions represent fiber connectors.

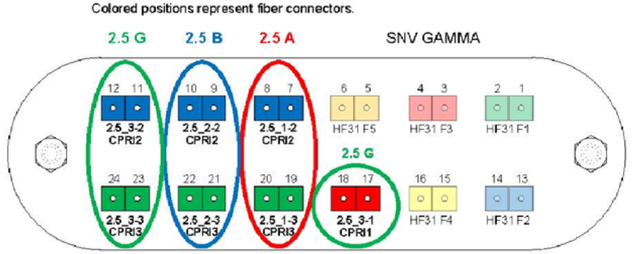

NOTES: Image depicts right side of the fiber bulkhead.
Left side connections will use the same position designations.

BTS TO DISTRIBUTION BOX
FIBER CONNECTIVITY
SCALE: N.T.S
1 SP-5

RRH to Distribution Box Fiber Connectivity

Alcatel-Lucent	5/17/2014	V6.3

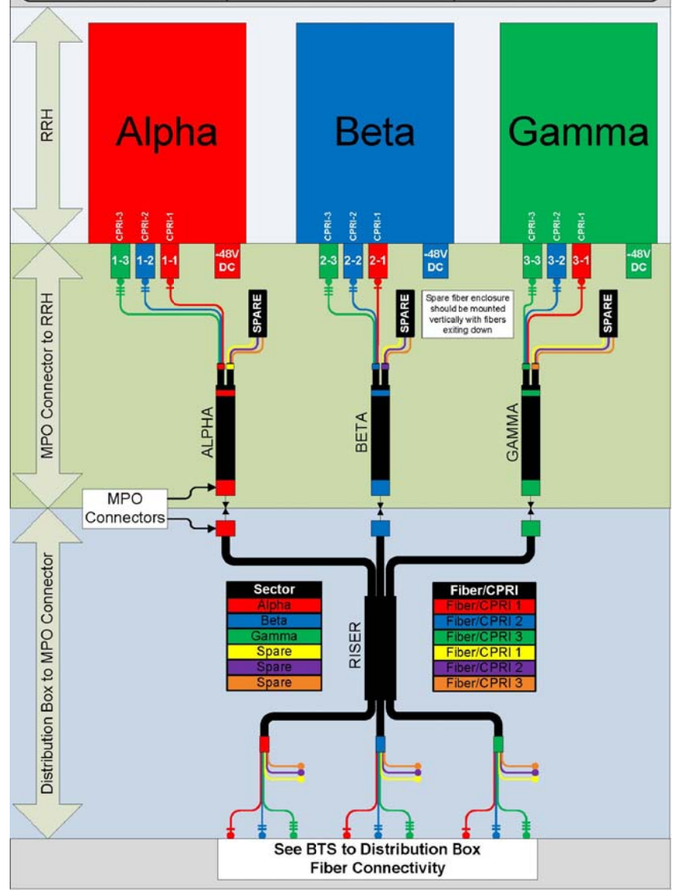

RRH TO DISTRIBUTION BOX
FIBER CONNECTIVITY
SCALE: N.T.S
2 SP-5

8T8R w/ FILTER

Alcatel-Lucent	5/17/2014	V6.3

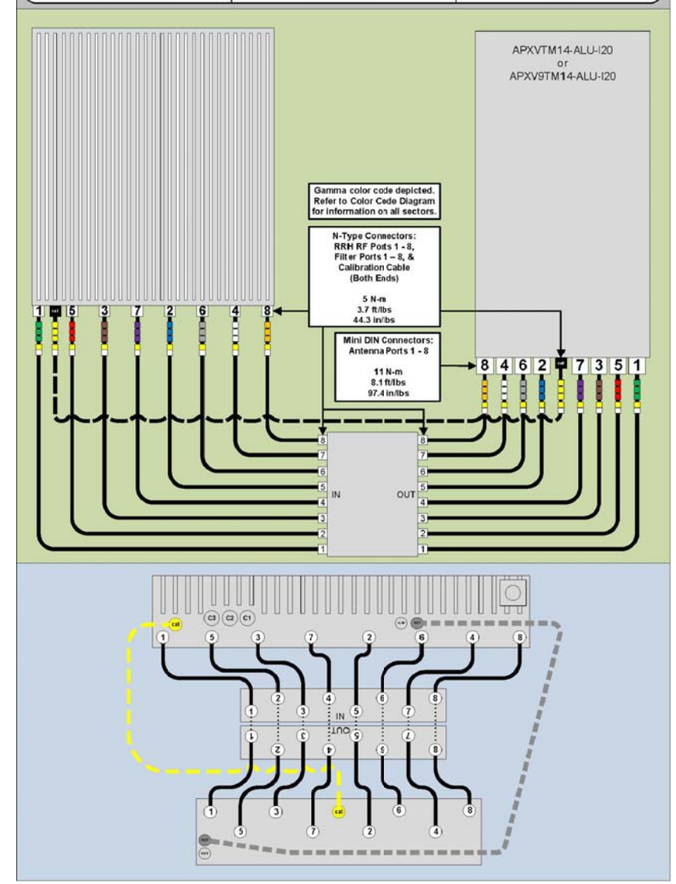

RF CONNECTIVITY
SCALE: N.T.S
3 SP-5

entrex
communication services, inc.
6600 Rockledge Drive, Suite 550
Bethesda, MD 20817
Phone: (202)408-0960
Fax: (202)408-0961

SUBMITTALS

DATE	DESCRIPTION	REV.
10-09-18	CONSTRUCTION REVIEW	

SEAL:

Sprint
6391 SPRINT PARKWAY
OVERLAND PARK, KANSAS 66251

PROJECT NO:	1015.920
DESIGNER:	M.A.
ENGINEER:	M.M.

SCALE: AS SHOWN

WA54XC512
PEPCO TOWER 163S
1300 ASHTON ROAD
ASHTON, MD 20861

TITLE:

2.5 GHz
CONNECTIVITY
DETAILS

SHEET NUMBER:

SP-5

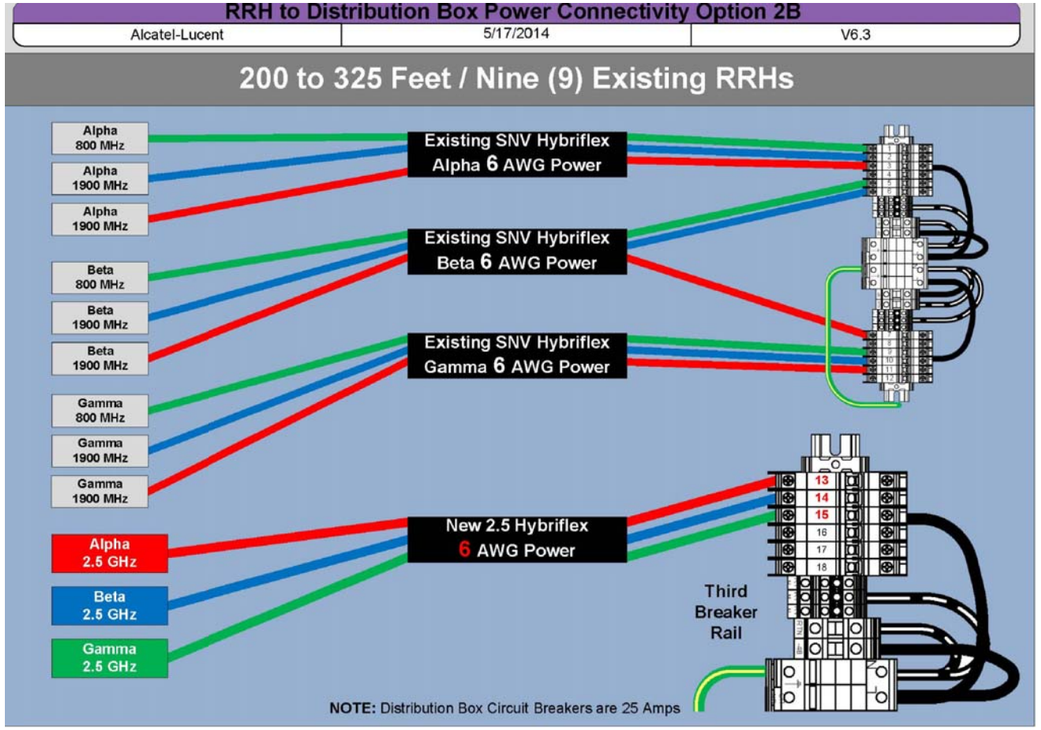

RRH TO DISTRIBUTION BOX POWER CONNECTIVITY (1 / SP-6)
SCALE: N.T.S

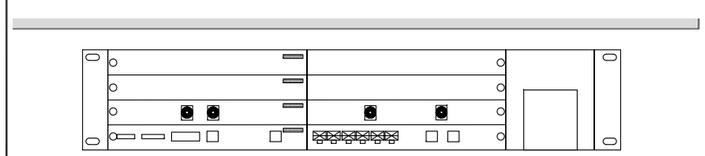

ALCATEL- LUCENT 9926 BASE BAND UNIT
(2U FORM FACTOR)

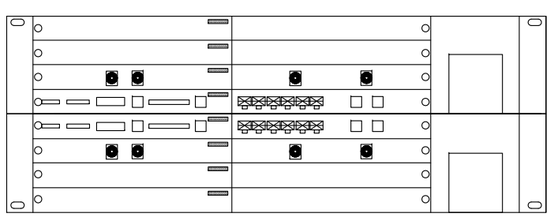

ALCATEL- LUCENT 9926 BASE BAND UNIT
(4U FORM FACTOR)

2.5 GHz BBU COMPONENT (2 / SP-6)
SCALE: N.T.S.

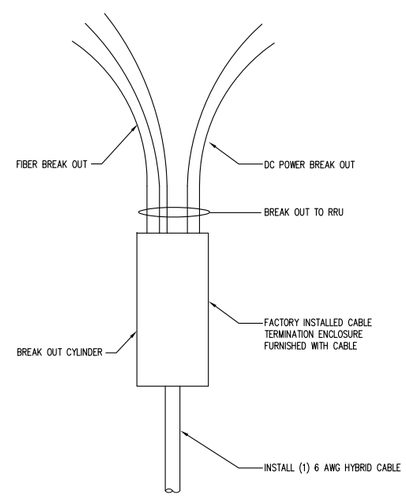

NOTES:

1. IMPORTANT! LINE UP WHITE MARKINGS ON JUMPER AND RISER IP-MPO CONNECTORS ON SLIDE THE RISER CONNECTOR TO THE JUMPER CONNECTOR. PUSH THE WHITE MARK ON THE JUMPER CONNECTOR FLUSH AGAINST THE RED SEAL ON THE RISER CONNECTOR.
2. IMPORTANT! ROTATE THE BAYONET HOUSING CLOCKWISE UNTIL YOU HEAR A CLICK SOUND (MEANS A GOOD CONNECTION IS IN PLACE).

HYBRID BREAKOUT DETAIL (3 / SP-6)
SCALE: N.T.S.

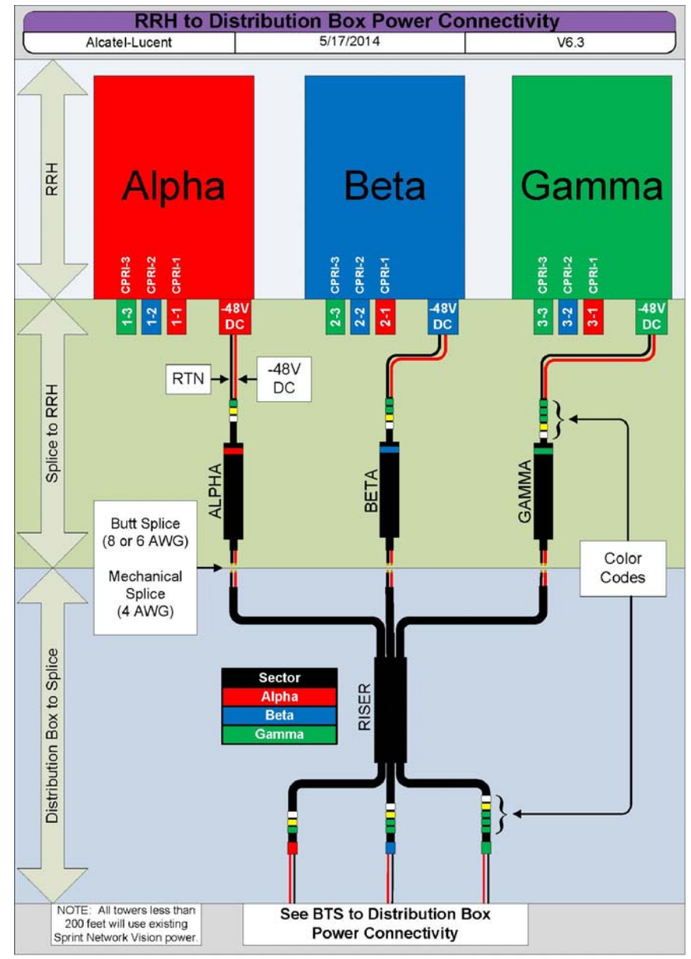

RRH TO DISTRIBUTION BOX POWER CONNECTIVITY (4 / SP-6)
SCALE: N.T.S

entrex communication services, inc.
6600 Rockledge Drive, Suite 550
Bethesda, MD 20817
Phone: (202)408-0960
Fax: (202)408-0961

SUBMITTALS

DATE	DESCRIPTION	REV.
10-09-18	CONSTRUCTION REVIEW	

SEAL:

Sprint
6391 SPRINT PARKWAY
OVERLAND PARK, KANSAS 66251

PROJECT NO: 1015.920
DESIGNER: M.A.
ENGINEER: M.M.
SCALE: AS SHOWN

WA54XC512
PEPCO TOWER 163S
1300 ASHTON ROAD
ASHTON, MD 20861

TITLE:
2.5 GHz
POWER CONNECTIVITY
AND EQUIPMENT DETAILS

SHEET NUMBER:
SP-6