Science.
Applied to Life.™

3M™ Slim Lock Classic Closure SLC-716

Installation Instructions

1.0 Intended Use

DIN 716 cable assemblies, when installed in exterior environments, are known to routinely degrade due to water and contaminant penetration. As a deterrent to this degradation, current practice calls for the application of multiple wrap layers of PVC, butyl rubber, or other tape materials to the connector area. The 3M™ Slim Lock Classic Closure is intended to provide a reusable alternate weatherproofing solution that is reliable as well as quickly and easily installed.

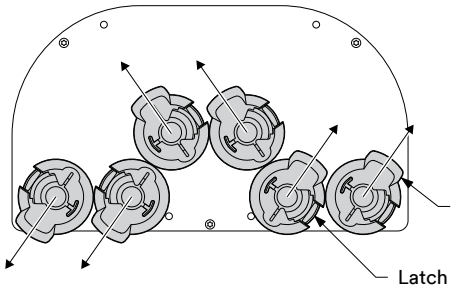

2.0 Features

The 3M Slim Lock Classic Closure incorporates a highly compliant gel web technology that provides weather sealing features even when used on widely varying cable and connector geometries. The product consists of two primary parts; a gel web holder and an outer compression sleeve.
The gel web holder provides a convenient method to handle and locate the sealing web during installation. The outer sleeve, when properly installed, is designed to impart a compressive load to the gel web holder resulting in an environmental seal.



Figure 1 - 3M™ Slim Lock Classic Closure Components

January 2016
78-0013-6460-9-G

3.0 Package Contents

- Gel web holder
- Compression sleeve
- Installation instructions/tipsheet

4.0 Limitations

4.1 Application

a. Compatibility
This product is designed to seal a 0.50 inch (12.7 mm) nominal diameter jumper cable terminated to a DIN 716 compliant receptacle including those with fully threaded barrels. A proper seal will occur on coaxial cables having an outside diameter within the range of 0.53 to 0.63 inch (13.5 to 16.0 mm).

b. Clearance
For proper installation, adequate clearance must be provided between the assembly to be protected and adjacent hardware. The axial distance between connector nut and receptacle bulkhead must be at least 0.31 inch (7.9 mm). There must be at least 0.25 inch (6.4 mm) radially between the connector nut and the nearest side obstruction. Additionally, any strain relief feature such as heat shrink or metal collar must reside within the closure, not to extend beyond 4.25 inches (108 mm) from bulkhead. The strain relief feature must not be > 0.88 inch (22.35 mm) in diameter. See Figure 2.

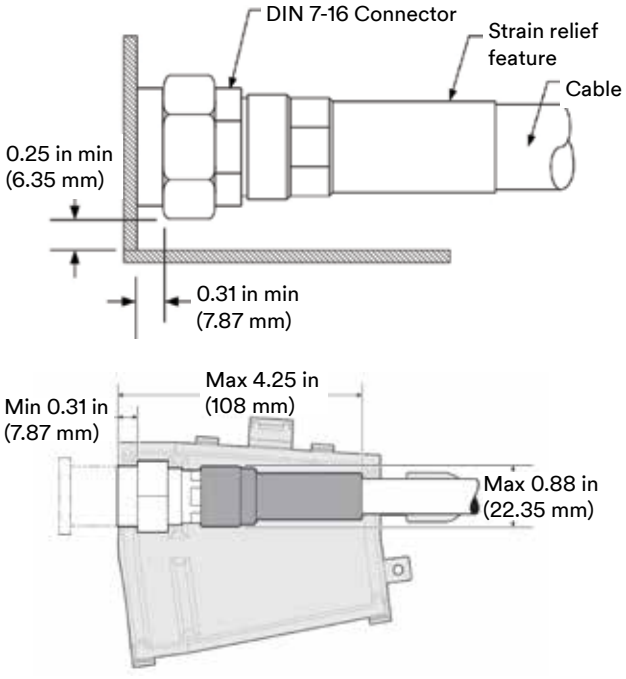

Figure 2 - Required Clearances

c. Service
The 3M™ Slim Lock Classic Closure is designed for outside pole and tower-mounted installations. It is not compatible with buried or below ground applications.

d. Reuse
The 3M Slim Lock Classic Closure may be installed and reinstalled up to 10 total times without seal degradation.

e. Installation/Removal Thermal Limits
This product may be installed and/or removed when ambient temperatures range between 0°C (32°F) and +40°C (104°F).

Note: If attempting to install the 3M Slim Lock Classic Closure at temperatures from 0°C (32° F) to -20°C (-4°F) the use of the 3M Slim Lock Classic Cold Weather Installation Tool will be required (80-6114-9708-4). Please reference instruction manual 78-0015-1681-0 for more information on this tool.

If the 3M Slim Lock Classic Closure is installed without taking into account these required clearances, then an obstruction can actually push on the closure, causing a possible failure to occur. See Figure 3.

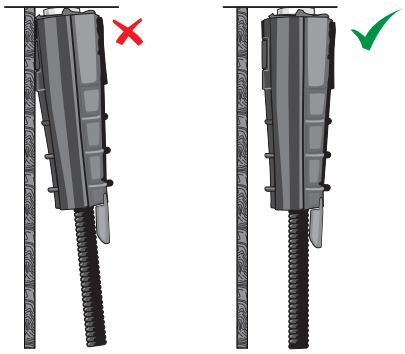

Figure 3

4.2 Cable Bends

Installation ease of the enclosure may be compromised if the coaxial cable starts a bend closer than 10 inches (254 mm) from the connector bulkhead. A cable bend that is closer than 4 inches (102 mm) from the installed closure can impede installation or removal of the closure. See Figures 4 and 5.

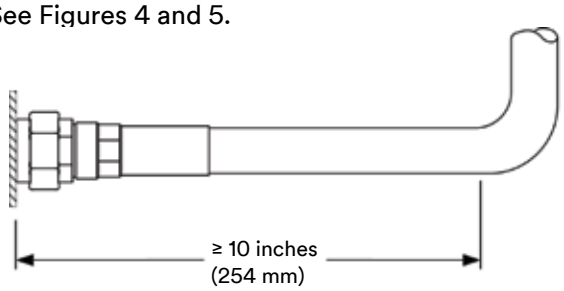

Figure 4

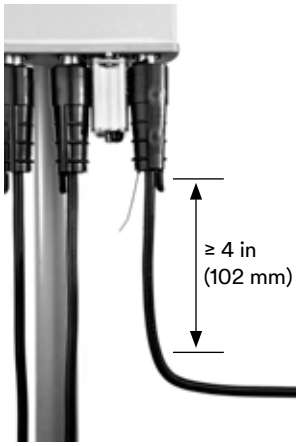

Figure 5 - Installed Bend Clearance

An easy way to ensure the minimum bend is not compromised is to use the palms of an average man's hands, one on top of the other. A bend should not occur in this area. See Figure 6.

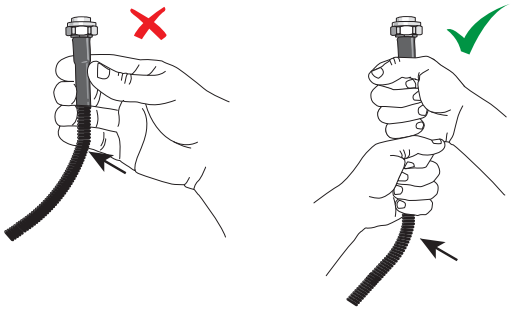

Figure 6

5.0 Installation

a. Care should be taken to ensure the sealing surfaces shown in the figure below are free of dust, liquids and surface contaminants.

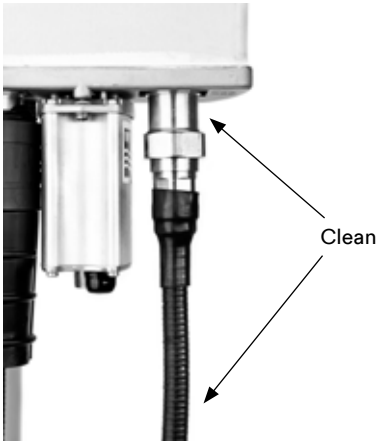

Figure 7

The connector nut must be located in the axial position shown.

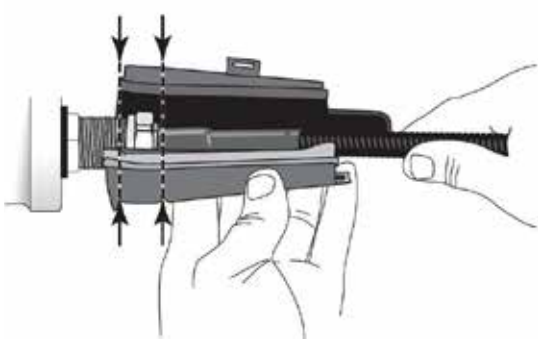

Figure 8

Squeeze the gel web holder shut and simultaneously secure the bale in its locked position. This feature is used only to captivate the gel holder prior to compression sleeve installation.



Figure 9

b. Optional: The compression sleeve may be temporarily stowed during installation by snapping the part on to the cable as shown. Do not perform this operation during windy conditions.



Figure 10

c. Slide the compression sleeve axially onto the gel web holder until the latch fully engages. Care should be taken to orient the sleeve as shown in the figures.

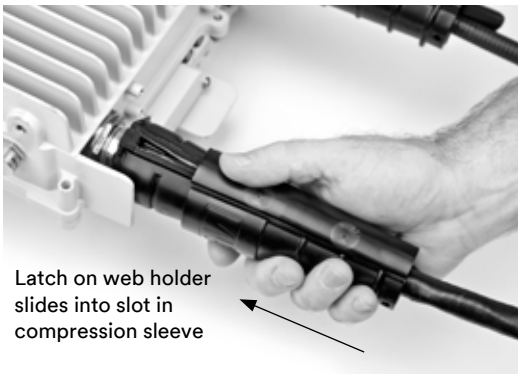

Figure 11

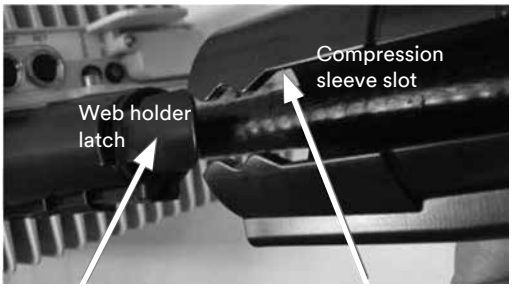

Figure 12

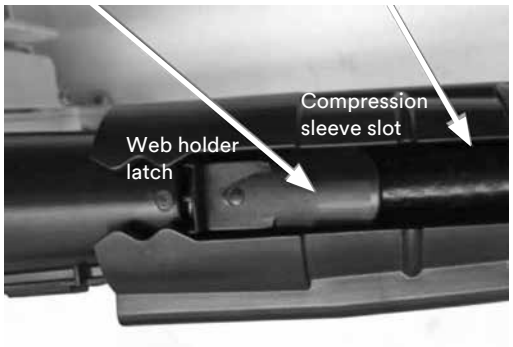

Figure 13



Figure 14

d. Always verify that the locking tab on the closure is fully engaged, otherwise a proper seal cannot be ensured. See Figure 15.

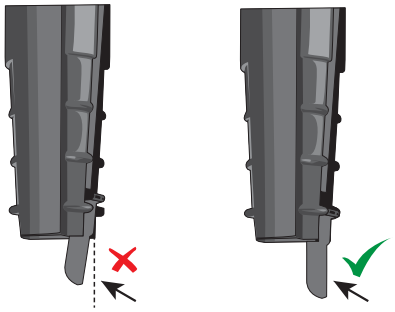

Figure 15

e. A cable bend that is closer than 4 inches (102 mm) from the installed closure could create a bend inside the closure and will likely not allow a proper seal. A good way to gauge the 4 inch (102 mm) distance is to mirror the palm of an average man's hand. A bend should not occur in this area. See Figure 16.

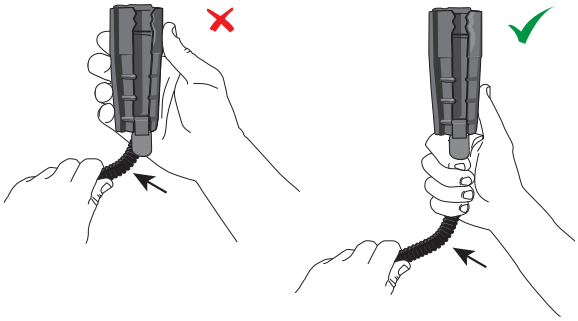

Figure 16

⚠ CAUTION

Avoid contact with other closures or obstructions that may force the housing to move off-center.

f. Optional: If additional security is desired, install a 0.08 inch (2 mm) nominal width cable tie (not included) in the provided hole.



Figure 17

6.0 Removal

a. Cut and remove cable tie if installed.

b. Depress the latch.



Figure 18

c. Pull the compression sleeve downward and off.



Figure 19

Release the bale if still latched. Bale release may be initiated by squeezing the gel holder until the bale pops open. Remove the gel web holder by spreading it open.

3M is a trademark of 3M Company.

Important Notice
All statements, technical information, and recommendations related to 3M's products are based on information believed to be reliable, but the accuracy or completeness is not guaranteed. Before using this product, you must evaluate it and determine if it is suitable for your intended application. You assume all risks and liability associated with such use. Any statements related to the product which are not contained in 3M's current publications, or any contrary statements contained on your purchase order shall have no force or effect unless expressly agreed upon, in writing, by an authorized officer of 3M.

Warranty; Limited Remedy; Limited Liability.
This product will be free from defects in material and manufacture for a period of one (1) year from the time of purchase. **3M MAKES NO OTHER WARRANTIES INCLUDING, BUT NOT LIMITED TO, ANY IMPLIED WARRANTY OF MERCHANTABILITY OR FITNESS FOR A PARTICULAR PURPOSE.** If this product is defective within the warranty period stated above, your exclusive remedy shall be, at 3M's option, to replace or repair the 3M product or refund the purchase price of the 3M product. **Except where prohibited by law, 3M will not be liable for any direct, indirect, special, incidental or consequential loss or damage arising from this 3M product, regardless of the legal theory asserted.**

Communication Markets Division
6801 River Place Blvd.
Austin, TX 78726-9000

Phone 1-800-426-8688
Web www.3M.com/Telecom

Please recycle. Printed in USA © 3M 2016.
All rights reserved. 78-0013-6460-9-G