Pub. 43004-008F

GAI-TRONICS® CORPORATION
A HUBBELL COMPANY

Model IPE2500A and IPE2500A-MLS Paging Encoder/Desktop Controller User and Installation Manual



GAI-Tronics Corporation 400 E. Wyomissing Ave. Mohnton, PA 19540 USA
610-777-1374 ■ 800-492-1212 ■ Fax: 610-796-5954
VISIT WWW.GAI-TRONICS.COM FOR PRODUCT LITERATURE AND MANUALS

CONFIDENTIALITY NOTICE

This manual is provided solely as an operational, installation, and maintenance guide and contains sensitive business and technical information that is confidential and proprietary to GAI-Tronics. GAI-Tronics retains all intellectual property and other rights in or to the information contained herein, and such information may only be used in connection with the operation of your GAI-Tronics product or system. This manual may not be disclosed in any form, in whole or in part, directly or indirectly, to any third party.

COMPUTER SOFTWARE COPYRIGHTS

This product contains copyrighted computer programs stored in semiconductor memory. These programs are copyrighted by GAI-Tronics Corporation and may not be reproduced in any form without express written permission from GAI-Tronics.

WARRANTY

GAI-Tronics warrants for a period of one (1) year from the date of shipment, that any GAI-Tronics equipment supplied hereunder shall be free of defects in material and workmanship, shall comply with the then-current product specifications and product literature, and if applicable, shall be fit for the purpose specified in the agreed-upon quotation or proposal document. If (a) Seller's goods prove to be defective in workmanship and/or material under normal and proper usage, or unfit for the purpose specified and agreed upon, and (b) Buyer's claim is made within the warranty period set forth above, Buyer may return such goods to GAI-Tronics' nearest depot repair facility, freight prepaid, at which time they will be repaired or replaced, at Seller's option, without charge to Buyer. Repair or replacement shall be Buyer's sole and exclusive remedy, and the warranty period on any repaired or replacement equipment shall be one (1) year from the date the original equipment was shipped. In no event shall GAI-Tronics' warranty obligations with respect to equipment exceed 100% of the total cost of the equipment supplied hereunder. The applicability of any such third-party warranty will be determined solely by GAI-Tronics.

Services. Any services GAI-Tronics provides hereunder, whether directly or through subcontractors, shall be performed in accordance with the standard of care with which such services are normally provided in the industry. If the services fail to meet the applicable industry standard, GAI-Tronics will, for a period of one (1) year from the date of completion, re-perform such services at no cost to the Buyer. Re-performance of services shall be Buyer's sole and exclusive remedy, and in no event shall GAI-Tronics' warranty obligations with respect to services exceed 100% of the total cost of services provided hereunder.

Limitations/Exclusions. The warranty on any equipment supplied hereunder is subject to Customer's use in compliance with applicable FCC regulations and manufacturer specifications. The warranties herein shall not apply to, and GAI-Tronics shall not be responsible for, any damage to the goods or failure of the services supplied hereunder, to the extent caused by accident, misuse, abuse, neglect, system design, product modification, failure to follow instructions contained in the product manual, repair, or attempted repair by anyone not authorized by GAI-Tronics, improper installation, installation of parts that do not conform to the quality or specifications of the original parts or accessories, damage or loss occurred during shipment, or any unit which is not new when sold or upon which the serial number has been defaced, modified or removed. The warranty does not extend to damage incurred by natural causes including Force Majeure. The warranty does not cover microprocessors if failure is due to static damage or application of improper voltage. THE WARRANTIES AND REMEDIES CONTAINED HEREIN ARE IN LIEU OF AND EXCLUDE ALL OTHER WARRANTIES AND REMEDIES, WHETHER EXPRESS OR IMPLIED BY OPERATION OF LAW OR OTHERWISE, INCLUDING ANY WARRANTIES OF MERCHANTABILITY OR FITNESS FOR A PARTICULAR PURPOSE.

Operational and Maintenance Procedures. Buyer acknowledges that any improper use, maintenance, or modification of the equipment provided hereunder, or use of unqualified maintenance or service technicians will severely impair the operational effectiveness of the entire communication system. Buyer hereby agrees to indemnify, defend and hold GAI-Tronics harmless from and against any and all third party claims arising, in any manner, out of: (a) Buyer's neglect of the equipment; (b) Buyer's use of technicians not authorized by GAI-Tronics to service the equipment; or (c) Buyer's improper use or modification of the equipment or failure to follow the operational and maintenance procedures provided with the equipment.

Limitation of Liability/Damages. In no event (even should circumstances cause the exclusive warranties and remedies set forth in the Warranty section to fail of their essential purpose) shall either party be liable for any indirect, incidental, special or consequential damages (including, but not limited to, loss of use, loss of anticipated profits, or damages arising from delay) whether such claims are alleged to have arisen out of breach of warranty, breach of contract, strict or absolute liability in tort, or other act, error or omission, or from any other cause whatsoever, or any combination of the foregoing.

Table of Contents

FOREWORD **1**

SCOPE OF MANUAL 1
NOMENCLATURE 1
ORDERING REPLACEMENT PARTS 1
SERVICE AND REPAIR 1
FCC INTERFERENCE WARNING 1
SAFE HANDLING OF CMOS INTEGRATED CIRCUIT DEVICES 2

DESCRIPTION **3**

FEATURES AND BENEFITS 3
INTRODUCTION TO THE IPE2500A PAGING ENCODER/DESKTOP CONTROLLER 4
DESK SET BUTTON PANEL 5
INTERNAL MICROPHONE AND SPEAKER 6
HANDSET 6
CONNECTORS 6
Power Connector *6*
Line Connector *7*
Audio Accessory/RS-232 Port *7*
CONTROL TONES 8
TONE LEVELS 8
DTMF DECODE/H.E.A.R. SYSTEM SUPPORT 8
ACCESSORIES, AND OPTIONS AND KITS 9
PERFORMANCE SPECIFICATIONS 10

OPERATION **11**

DISPLAY 11
RECEIVING CALLS 12
INITIATING CALLS 12
Handset Transmit *13*
Transmit From Internal (Local) Microphone *13*
Transmit From Desk Microphone or Footswitch *13*
FRONT PANEL BUTTONS 14
Signaling Buttons *14*
PB1, PB2, PB3, and PB4 Programmable Buttons *14*
VOLUME Up and VOLUME Down Buttons *14*
CTL (Control) Button *15*
IC (Intercom) Button *15*
MONITOR Button *15*
TRANSMIT Button *15*
SELECT Button *15*
Keypad Buttons *15*
PARALLEL STATUS OPERATION 16
FREQUENCY DISPLAY 16
NUMERIC KEYPAD FREQUENCY SELECTION 17
PTT FUNCTION TONE (KEY-UP ONLY FUNCTION TONE) 17
TONE SUPERVISOR CONTROL 18
"Hard" Supervisor Control *18*
SECURE OPERATION 18
DTMF DECODE 19
H.E.A.R. SYSTEM OPERATION 19
OPTIONAL DC CONTROL KIT 20
OPTIONAL RELAY CONTROL KIT 20
Local Control *20*
E&M *20*

E Lead *20*
M Lead *20*
E&M with Tone Control *21*
MULTI-LINE SELECT (IPE2500A-MLS) 21
Line Selection *22*
Vox-Detect Indication *23*
Unselect Volume Adjustment *23*
OPTIONAL EXTERNAL SPEAKER KIT 23
ALERT TONES 23
PAGING 24
Entering the Paging Menu *24*
Selecting the Page Type *24*
Entering Capcode Digits for Paging *24*
Entering a Programmed Alias *25*
Sending the Page *25*
2-TONE PAGING EXAMPLE 26
Group Call *26*
PLECTRON PAGING 29
DIRECT DTMF DIALING 32
Timed Direct DTMF Dialing *32*
PTT-Controlled Direct DTMF Dialing *32*
Direct DTMF Dialing Using Immediate DTMF Paging *33*
Audio Transmissions during Direct DTMF Dialing *33*
Enabling Direct DTMF Dialing *33*
RS-232 INPUT OR PC CONTROL 34
Paging *34*
Frequency Changing *35*
Custom Tones *35*

INSTALLATION **37**

PLANNING THE INSTALLATION 37
Mounting *37*
FCC Interference Warnings *37*
Electrostatic Discharge (ESD) Protection *38*
Equipment Required *38*
Cable Installation Safety Considerations *38*
Telephone Line Lightning and Over-Voltage Protection *38*
POWER CONNECTION 38
LINE CONNECTION 39
MULTI-LINE SELECT (IPE2500A-MLS) 40
Programming Changes *40*
Line Configuration - 2/4-Wire Selection *40*
MLS Line Termination *40*
MLS Line-Level Normalization *41*
Making the Input Sensitivity Adjustment *41*
Making the Vox Detect Level Adjustment *41*
Line Connection for MLS *42*
DTMF/H.E.A.R. FUNCTIONS 43
AUDIO ACCESSORY/RS-232 PORT 43
MICROPHONE SENSITIVITY ADJUSTMENTS 44
LEVEL ADJUSTMENTS AND DIAGNOSTICS 45
Main Diagnostics Selection *45*
Programming Menu *45*
Reloading Factory Defaults *47*
PB1 – Line Output Adjust *47*
PB2 - Line-In Sensitivity *49*
PB3 – Internal Diagnostics *50*
PB4 – Tone Level Adjust *53*
CTL-PB1– Toggle Compressors *54*

THEORY OF OPERATION 55

GENERAL DESK SET OVERVIEW 55
RECEIVE AUDIO 55
SPEAKER AUDIO 55
TRANSMIT AUDIO 56
MICROPHONE AUDIO 56
GUARD TONE DETECTION 56
DC CONTROL MODULE (NOT COMPATIBLE WITH MLS OPERATION) 57
RELAY CONTROL MODULE (NOT COMPATIBLE WITH MLS OPERATION) 57
MULTI-LINE SELECT MODULE 58
RESET CIRCUIT 58

CARD SUITE PROGRAMMING SOFTWARE 59

GENERAL DESCRIPTION 59
CONNECTION 59
INSTALLATION 59
READING THE UNIT 59
CARD SUITE PROGRAMMING 60
Editing Screen 60

TROUBLESHOOTING 61

TROUBLESHOOTING THE IPE2500A DESK SET 61
FUSE REPLACEMENT 62

CIRCUIT BOARDS 63

SCHEMATICS 67

DEFINITIONS AND ACRONYMS 81

Scope of Manual

This manual offers descriptive data and service information for the Model IPE2500A Paging Encoder/Desktop Controller. Service diagrams and printed circuit board details are a part of this service manual.

Nomenclature

The model number, located on the nameplate on the bottom, specifically identifies GAI-Tronics equipment. If additional options are ordered, the option is identified on the circuit board.

Ordering Replacement Parts

When ordering replacement parts or requesting equipment information, please include the complete identification number. This applies to all components, kits, and chassis. If the component part number is not known, the order should include the number of the chassis or kit of which it is a part and sufficient description of the desired component to identify it. Order parts from:

Customer Service
GAI-Tronics Corporation
400 E. Wyomissing Ave.
Mohnton, PA 19540
US: 800-492-1212
Outside US: 610-777-1374

Service and Repair

Inoperative or malfunctioning equipment should be returned to the factory for repair. Please call **1-800-492-1212** to obtain a Return Authorization number, published repair prices, and shipping instructions. A Return Authorization number can also be obtained by visiting our website at www.gai-tronics.com.

NOTE: A purchase order or credit card number is required prior to processing non-warranty repairs.

FCC Interference Warning

The FCC requires that manuals pertaining to Class A and Class B computing devices must contain warnings about possible interference with local residential radio and TV reception. This warning reads as follows:

NOTE: This equipment has been tested and found to comply with the limits for a Class A digital device, pursuant to Part 15 of the FCC Rules. These limits are designed to provide reasonable protection against harmful interference when the equipment is operated in a commercial environment. This equipment generates, uses, and can radiate radio frequency energy and, if not installed and used in accordance with the instruction manual, may cause harmful interference to radio communications. Operation of this equipment in a residential area is likely to cause harmful interference in which case the user will be required to correct the interference at his own expense.

Safe Handling of CMOS Integrated Circuit Devices

Many of the integrated circuit devices used in communications equipment are of the Complementary Metal Oxide Semiconductor (CMOS) type. Because of their high open circuit impedance, CMOS integrated circuits are vulnerable to damage from static charges. Care must be taken handling, shipping, and servicing them and the assemblies in which they are used.

Even though protection devices are provided in CMOS integrated circuit inputs, the protection is effective only against over-voltage in the hundreds of volts range such as is encountered in an operating system. In a system, circuit elements distribute static charges and load the CMOS circuits, decreasing the chance of damage. However, CMOS circuits can be damaged by improper handling of the modules, even in a system.

To avoid damage to circuits, observe the following handling, shipping, and servicing precautions:

1. Prior to and while servicing a circuit module, particularly after moving within the service area, momentarily touch both hands to a bare metal, earth-grounded surface. This will discharge any static charge that may have accumulated on the person doing the servicing.

   NOTE: Wearing a conductive wrist strap will minimize static build-up during servicing.

2. Whenever possible, avoid touching any electrically conductive parts of the circuit module with your hands.

3. Power down the unit before installing or removing the circuit module.

4. When servicing a circuit module, avoid carpeted areas, dry environments, and certain types of clothing (silk, nylon, etc.) because they contribute to static build-up. Similarly, disconnect the test probe prior to removing the ground lead.

5. All electrically powered test equipment should be grounded. Apply the ground lead from the test equipment to the circuit module before connecting the test probe.

6. If a circuit module is removed from the system, it is desirable to lay it on a conductive surface (such as a sheet of aluminum foil) that is connected to ground through 100k of resistance.

7. When soldering, be sure the soldering iron is grounded and has a grounded tip.

8. Prior to connecting jumpers, replacing circuit components, or touching CMOS pins (if this becomes necessary in the replacement of an integrated circuit device), be sure to discharge any static build-up as described in procedure 1. Since voltage differences can exist across the human body, it is recommended that only one hand be used if it is necessary to touch pins on the CMOS device and associated board wiring.

9. When replacing a CMOS integrated circuit device, leave the device in its conductive rail container or conductive foam until it is to be inserted into the printed circuit module.

10. All low impedance test equipment (such as pulse generators, etc.) should be connected to CMOS device inputs after power is applied to the CMOS circuitry. Similarly, such low impedance equipment should be disconnected before power is turned off.

11. Replacement modules shipped separately from the factory will be packaged in a conductive material. Any modules being transported from one area to another should be wrapped in a similar material (aluminum foil may be used). **Never use non-conductive material** for packaging these modules.

Features and Benefits

Feature	Benefit
Programmable 16-frequency function control with alias	Any one of 16 EIA standard tones can be programmed for each frequency/function key along with an alias for each.
LCD display	Allows user-friendly interface; displays frequency alias, mode status and diagnostic information.
Programmable buttons	Four buttons provide up to 8 user-defined actions, i.e., frequency selection, alert tones, button mapping, paging, etc.
Programmable inputs and outputs	Inputs and outputs can be configured for a variety of selections. (Requires relay control option to be installed.)
Paging	Manual DTMF, 2-Tone, Plectron, 5-Tone; Immediate DTMF, Aliased DTMF, 2-Tone, Plectron, 5-tone, custom 2-Tone, group paging; auto channel select for manual and aliases are provided. Programmable talk time allows for greater flexibility.
Frequency selection	User can select frequency changes via keyboard entry, scrolling or via programmable buttons.
Parallel status updating	Enhanced system flexibility when multiple desk sets are connected in parallel. Each desk set operator knows the selected frequency.
Local, DC, E&M, E&M with tone control	Offers flexibility in types of remote and local control (requires options to be installed).
Line Operated Transmit Light (LOTL)	LED indicates when another desk set is transmitting; selectable speaker mute. Can be used to solve feedback problems.
Intercom capability	Desk set users can communicate without radio transmission.
Programmable voice delay	User can speak immediately after pressing PTT or transmitter without clipped words.
Front-mounted controls and adjustments	Includes mute/unmute and local speaker on/off.
Parallel TX audio (2- or 4-wire)	User can hear audio transmitted by another desk set.
Full duplex capable with 2- or 4-wire	Allow 2-wire full-duplex operation with 2-wire adapter. This is useful for full-duplex and trunking radio systems.
Built-in internal mic and speaker	Allows for hands-free communication.
Adjustable RX input sensitivity and TX output level	Allows flexibility with different radio systems and user environments where radio output levels, line losses, and noise factors vary.
Line receive and transmit compression	Automatically normalizes varying input and output levels caused by system factors. (continued on next page)

Feature	Benefit
Audio accessory connection	Numerous audio accessory options maximize ease-of-use and productivity.
Modular phone line connection	Connector on rear makes telephone line easy to install.
H.E.A.R. (Hospital Emergency Administration Radio) System operation	Provides selective calling and decoding of DTMF tone codes with alerting.
Direct DTMF Dialing	Allows for one-button generation of DTMF digits from the numeric keypad to control remote devices and repeaters.

Introduction to the IPE2500A Paging Encoder/Desktop Controller

The IPE2500A Paging Encoder/Desktop Controller provides a cost-effective console-like alternative to conventional radio control. This standard unit is a "tone" control remote. However, by adding the optional field installation kits to the IPE2500A and using the CARD Suite Programming Software, it can be configured for DC, Local, and E&M and tone, allowing further possibilities for remote dispatch.

When used with a compatible remote adapter such as the ITA2000A, the IPE2500A provides dispatch control. Nearly every aspect of the operation can be programmed using the CARD Suite Programming Software for specific control needs. The multiple frequency control, 2-line LCD display, aliasing functions, intercom, parallel status updating, programmable voice delay, paging encoder, H.E.A.R., and multiple desk set support are standard features that provide powerful fixed station control.

Each of the four programmable buttons can be configured to perform two functions. In addition, the four **optional** inputs and outputs for the IPE2500A that can be programmed for various uses. With optional relays, outputs can be configured for On-Air Light, General Purpose Control, "On-Off," PTT, Vox Detect, Data Enable, and Guard Tone Detect. Inputs can be configured for Button Remap, E Lead for E&M, Output Link, and Link to a Page.

The IPE2500A also includes DTMF, 2-Tone, Plectron, and 1500, 2805, and custom 2-Tone paging formats. Buttons can be configured for preset paging. With the relay control option, the IPE2500A is capable of local, E&M, and E&M with tone control.

Multi-line Select is available with the IPE2500A. When equipped, the unit is referred to as an IPE2500A-MLS. This unit provides single or multi-select transmission capability, tone remote control of two to four base stations, vox detect indication for each line, manual unselect audio mute, mute unselect audio on transmit, and is 2-wire or 4-wire compatible.

Desk Set Button Panel

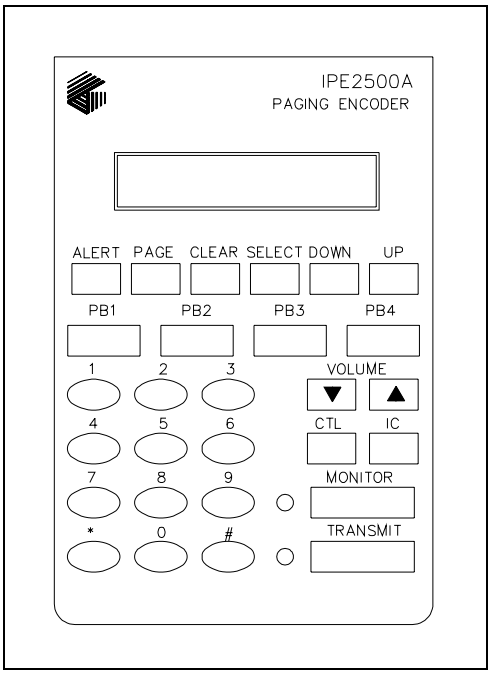

IPE2500A Front Panel

Transmit Button and LED: The red TRANSMIT button is used to place the desk set in the transmit mode and to initiate voice transmissions. The TRANSMIT LED, located to the left of the button, illuminates steadily when transmitting, and flashes when a parallel desk set is transmitting.

Monitor Button and LED: The MONITOR button (CTCSS/CDCSS disable) is used to place the radio in the monitor mode. This disables coded squelch and prevents "running over" other user's communication. The MONITOR LED, located to the left of the button, illuminates when monitor is activated.

Volume Buttons: The units contain two buttons labeled VOLUME imprinted with up and down arrows. They are used to increase and decrease the local speaker volume and microphone levels. They are also used for special applications.

CTL: CTL is used in conjunction with other buttons to provide secondary key functions.

IC: The IC button allows communication between desk set users without transmission over the radio air waves. When this button is pressed and held, microphone audio is routed to the line without activating the radio transmitter. If using the handset, it is not necessary to press the handset PTT. The IC button will serve as the PTT. Other desk sets in parallel will hear the audio automatically.

Keypad Buttons: The numeric keypad is used for the selection of a desired frequency and page capcode entry. See the "Operation" section of this manual for further information.

LCD Display: Each of the desk sets includes a backlit 2 × 16 character LCD display for operator information.

Signaling Buttons: Refer to the diagram above for the location of the front panel buttons. The following paging buttons are used for paging and initiating alert tones:

- ALERT
- PAGE
- CLEAR
- SELECT
- DOWN
- UP

The function and operation of each of the paging buttons is discussed in the "Operation" section of this manual.

SELECT, in addition to being used in the various signaling modes, also allows entry into the frequency selection mode. This is useful when direct DTMF mode is enabled and the operator must change the frequency of the base station. **NOTE:** This method of entry into the frequency selection mode is not available on the IPE2500A-MLS.

Programmable Buttons: The PB1, PB2, PB3, and PB4 programmable buttons can each be configured to perform two separate functions. Depending on its configuration, the selected button illuminates when it is pressed. It continues to be illuminated until a different button is pressed.

Internal Microphone and Speaker

This microphone is intended for use in low noise environments. The handset must be on-hook in order to use the microphone. The internal microphone and speaker are provided to allow hands-free communication.

Handset

Each desk set is equipped with a handset with a coil cord used for receiving and transmitting calls. The handset includes a push-to-talk (PTT) pressbar.

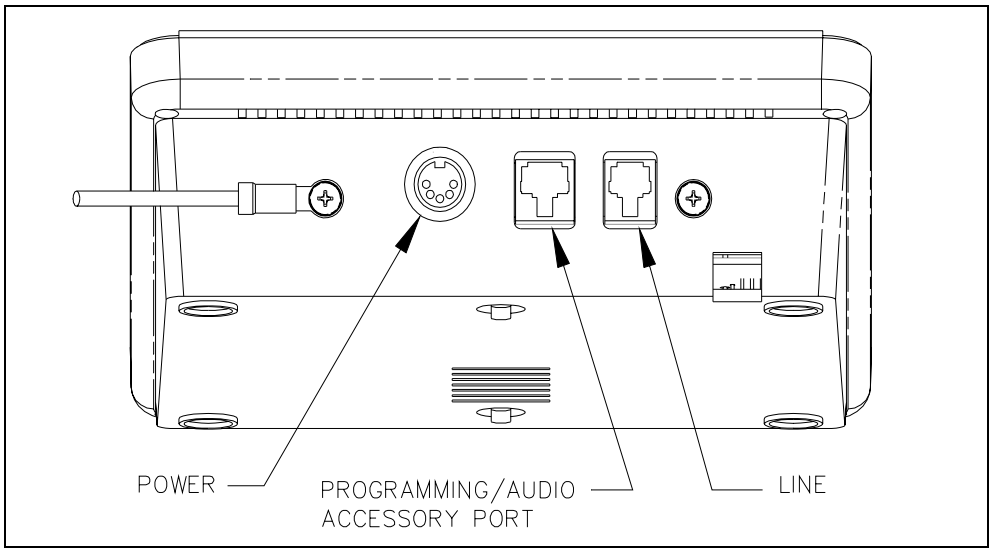

Rear View of IPE2500A

Connectors

Power Connector

The IPE2500A is powered by a listed ac wall transformer supplying nominal 12 V dc. The operating range is 10.5 to 15 V dc. The 5-pin power connector diagram and pinout are shown below:

Pin	Function
1	-IN
2	Battery backup +IN
3	+IN
4	-IN
5	+IN

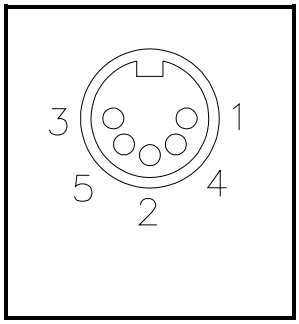

Line Connector

The 6-pin line connector is located on the rear of the desk set. See rear view diagram above. The line connector pinout and diagram are shown below:

Pin	Function
1	No connection
2	4-wire RX +IN
3	2-wire TX +OUT/RX IN
4	2-wire TX –OUT/RX IN
5	4-wire RX –IN
6	No connection

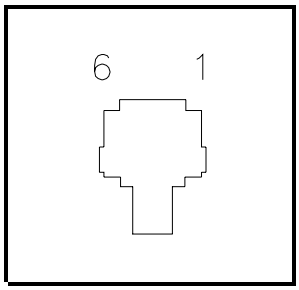

Audio Accessory/RS-232 Port

IPE2500A contains an 8-pin modular desk mic port to provide audio accessory options. Possible accessories include desk mic, gooseneck mic, boom mic, headset, or footswitch. The port is also used as the connector to a PC for CARD Suite programming.

Mic Input		Pin	Function
Type:	Passive input	1	B+ OUT (through 10 ohm)
Input Impedance:	>2k ohm	2	RS-232 TX OUT
Nominal Input Level:	-20 dBm	3	Monitor IN (closure to ground)
Input Adjustment Range:	N/A	4	AGND
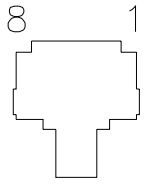		5	Mic IN (with bias voltage)
		6	PTT IN (closure to ground)
		7	RS-232 RX IN
		8	RX audio OUT (handset audio)

Control Tones

Standard EIA tone keying tones are used for controlling the radio system. The sequence is:

- A 2175 Hz High Level Guard Tone (HLGT) for 120 ms (default), programmable via CARD Suite.
- One of 16 function tones (FT) is sent for 40 ms (default), programmable via CARD Suite.

  The frequency range is from 2050 Hz to 550 Hz in 100 Hz steps. The FT level is 10 dB lower than the HLGT.

Monitor/F16	2050	F4	1650	F8	1250	F12	850
F1	1950	F5	1550	F9	1150	F13	750
F2	1850	F6	1450	F10	1050	F14	650
F3	1750	F7	1350	F11	950	F15	550

- A 2175 Hz Low Level Guard Tone (LLGT) is generated for the duration of the transmission. The LLGT is not generated during monitor. Because voice is present with this LLGT, a 2175 Hz filtering is required in the tone panel.

  When the monitor (CTCSS disable) is activated, the HLGT is generated for 120 ms, then a function tone of 2050 Hz is generated for 40 ms.

Tone Levels

Assuming that the ITA2000A Tone Remote Adapter has the HLGT output level set to 0 dBm:

- The FT level and audio voice level are –10 dBm (10 dB below HLGT)
- The LLGT level is –30 dBm.
- The HLGT and FT durations are programmable.

Some tone panels use the value of the FT frequency to provide certain radio control functions. If the radio supports channel changes from an external logic source, the FT1 frequency of 1950 Hz could be used to change the radio to channel 1. An FT6 frequency of 1450 Hz could change the radio to channel 6. This operation is identified as “channel steering.”

DTMF Decode/H.E.A.R. System Support

The IPE2500A will decode incoming DTMF and display the ID numerically or as a preprogrammed alias. The DTMF decode function will provide H.E.A.R. system support using a base ID DTMF code to perform speaker un-muting and alert functions.

Accessories, and Options and Kits

Description	Part No.
CARD Suite Software on CD	XAC1000A
Programming Cable	XAC0004A
Tone Remote Adapter	ITA2000A
DC Remote Control Field Install Kit	XDC0001A*
Relay Control Field Install Kit	XRC0001A*
MLS Field Install Kit (Line Select)	XMLS001A*
Mounting Kit for Option Boards	XAC0100A
Power Supply, 120/220 V ac 50/60 Hz	40419-008
Power Supply, 110/220 V ac 50/60 Hz (European connector)	40419-009
External Speaker Kit (Unselect Audio for -MLS)	XAC0120A
Desk Microphone	XDM004A or XDM002A
Gooseneck Desktop Microphone (requires XAAB002A)	XGM005A
Lightweight Headset (requires coiled cord)	XHS003C
Coiled Cord/Adapter Cable (requires XAAB002A)	XCC004B/25815-003
Coiled Cord with PPT (requires XAAB002A)	XCC003C
Footswitch (requires XAAB002A)	XFS002A
Audio Accessory Box	XAAB002A

*requires XAC0100A (1 per desk set)

Performance Specifications

Color ..... Black
Physical Size ..... 7.6 W × 8.9 L × 4.7 H inches
Weight ..... 2.4 lbs.
Temperature Range ..... -35° C to +70° C
Humidity ..... 95% at 50° C (non-condensing)
Line Impedance ..... 600 ohms nominal
Power Input ..... 10.5 to 16 V dc; 500 mA maximum from supplied ac adapter
Safety ..... Class III SELV powered equipment.
Powered by UL-listed (E104603)
and CSA-certified (LR67888) Class 2 ac adapter.
Emissions: ..... USA: FCC Part 15, Sub. B- Verification.
Canada: ICES – 003
Line Interface ..... FCC Part 68 Exempt
(Category II Tariff #260 service for private/leased line applications)
Canada: IC CS03-8
Nominal Input Level ..... -10 dBm
Nominal Output Level ..... -10 dB
Range -14 to +12 dB into 560 ohms
Frequency Response ..... ±3 dB, 300 to 3000 Hz (except notch filter)
Hum and Noise ..... Less than -45 dB below rated outputs
Audio Output to Speakers ..... 1 watt minimum with level in compression range
Audio Distortion ..... Less than 3% THD
Maximum Number of Remotes 10
Control Functions
- Guard Tone ..... 2175 Hz, programmable
- F1–F16 ..... Each is programmable from 550 to 2050 Hz in 100 Hz increments
- Monitor ..... 2050 Hz, programmable from 550 to 2050 Hz in 100 Hz increments

The IPE2500A provides radio system control from a remote location. It sends tone control to the remote adapter through a telephone line to control radio functions such as transmit, channel steering, and monitor.

Receive audio from the radio system is sent to the desk sets via the same line connection in 2-wire applications, or by using another pair in 4-wire applications.

The numeric keypad buttons are used for selection of different base station frequencies. These frequencies are dependent upon your radio's capabilities. Changes to system parameters require the use of the CARD Suite Programming Software and the programming cable, which are sold separately. Complete information is contained in the "CARD Suite" section of this manual.

Display

The IPE2500A has a backlit 2×16-character super-twist LCD display to provide valuable operator information. This information allows the operator to determine the status of the unit. The following describes the display at various states:

At power up:

- Initially, line 1 shows: CHECKING PARAMS, and line 2 shows: PLEASE WAIT.
- After 3 to 5 seconds, line 1 shows IPE2500, and line 2 shows: the firmware version.

During normal operation

Line 1 shows:

- The currently selected frequency - FREQ:XX or the frequency alias, and
- The current state of the unit - receive, RX; transmit, TX; intercom, IC; monitor, MON; alert, ALT; supervisory, SUP

Line 2 shows:

- Speaker/handset audio level during a change of level
- Current line selection and manual unselect audio mute status on an IPE2500-MLS
- Paging information during page function
- Operator instructions when applicable

During installation

The display shows various diagnostic information.

Receiving Calls

When power is applied, the IPE2500A is in the receive mode, allowing receive audio to be heard through the speaker or handset. It is always in receive mode unless the unit is transmitting, or a parallel desk set is transmitting (parallel mute function enabled).

The IPE2500A desk set contains an internal or local speaker and a handset speaker that operate as follows:

- When the handset is in the cradle, or on-hook, receive audio is heard on the internal speaker. In some operational modes, this can be changed, i.e., muting the speaker during TX of a parallel desk set.
- When the handset is off-hook, receive audio is routed to the handset. By using the front panel buttons, you may optionally select to hear audio through the local speaker in addition to the handset.

Initiating Calls

Before initiating a call, press the MONITOR button to verify that the radio channel is clear. The MONITOR button remains illuminated until a transmit function is initiated. This operation is typically required when a community or shared repeater is in use. Always allow time for the radio channel to be established. In addition, if the unit is configured to generate PTT IDs and to generate side tone, a tone will be heard during the PTT pretime and PTT generation. A voice delay can be programmed via the CARD Suite software to eliminate this waiting time if no PTT ID is used.

To initiate a call, press the TRANSMIT button, the handset push-to-talk (PTT) pressbar, or an accessory PTT button. When the desk set is transmitting, the TRANSMIT LED illuminates. The TRANSMIT button or handset PTT bar must be held down while talking to the radio user and released to listen. When the transmission is completed, the TRANSMIT LED extinguishes and the desk set returns to the receive mode.

Handset Transmit

Use of the handset is recommended when the desk set is located in noisy surroundings or if full-duplex 2-wire operation is desired. This may be used for types of systems that provide talk courtesy tones, such as trunking. Press the handset PTT bar or TRANSMIT button and speak into the handset microphone to transmit when the handset is off-hook.

Transmit From Internal (Local) Microphone

Use the internal microphone only in low noise environments. The handset must be on-hook for the local microphone to operate. Press the TRANSMIT button and speak in the direction of the integral microphone. For the best transmit audio quality, maintain a distance of about 18 inches from the microphone.

Transmit From Desk Microphone or Footswitch

All models can be keyed to transmit with an external desk microphone through the audio accessory port. When a PTT signal is asserted through this port, TX audio will also originate through this port. Use of the GAI-Tronics Model XDM002A or XDM004A Desk Mic, or compatible microphone, is recommended.

NOTES:

1. The polarity of the desk mic PTT and monitor inputs is CARD Suite programmable. If the polarity of either of these inputs is set for normally closed, it is necessary to keep the desk microphone connected at all times. Removing the microphone during operation may cause the keyboard to stop responding. This is caused by the internal pull-ups on these two pins. If the desk mic maintains a normally closed connection to ground, the connection is opened when the button is pressed and the desk set recognizes the key as pressed. Without the desk mic connected, the connection remains open and the desk set continually sees the key pressed.

2. The IPE2500A has three microphone sensitivity adjustments. Refer to the “Installation” section of this manual.

Front Panel Buttons

Signaling Buttons

The signaling buttons operate as follows:

ALERT

The ALERT button is used to transmit two types of alert tones: a continuous tone and a pulsed tone (when used in conjunction with the CTL button.) Refer to the "Alert Tone" section on page 23 of this manual for a detailed description.

PAGE

The PAGE button is used to enter page mode. While in page mode, the operator may select from among various types of pages to be transmitted. These include DTMF, 2-Tone, Plectron, 5/6-Tone, 2805, 1500, and Immediate DTMF. Refer to the "Paging" section on page 24 of this manual for a detailed description.

CLEAR

The CLEAR button uses include clearing the frequency selection during frequency selection mode or clearing a capcode entry in paging mode.

SELECT

The SELECT button is used to enter the frequency selection mode (not possible on the IPE2500A-MLS), select a frequency in frequency selection mode or select a paging type in page mode.

UP/DOWN BUTTONS

The UP and DOWN buttons are used while in the paging mode to scroll through the pre-programmed paging aliases and for programming microphone sensitivity.

PB1, PB2, PB3, and PB4 Programmable Buttons

The four programmable buttons with LED indicators are used to custom configure up to eight user functions. The PB1 through PB4 buttons are accessed directly, while the PB5 to PB8 buttons are accessed using the CTL key while depressing one of the PB1 through PB4 buttons. When shipped from the factory, the programmable buttons are disabled. Refer to you CARD Suite Help file for programming information.

In addition, the use and function of these keys are dependent upon your radio's capabilities.

VOLUME Up and VOLUME Down Buttons

Press the VOLUME Up or Down buttons to adjust the local speaker volume if the handset is on-hook. The handset speaker volume is adjusted if the handset is off-hook.

The display shows the new setting for two seconds after a volume change. The internal, handset, and accessory each have individual settings. When the handset is off-hook, the following message is displayed:

HANDSET VOL: X (handset off-hook) SPEAKER VOL: X (handset on-hook)

The VOLUME Up and VOLUME Down buttons also adjust the sensitivity of the microphone that is currently in use. Refer to the "Microphone Sensitivity Adjustments" section on page 44 of this manual for more information.

Pressing the CTL + VOLUME Up buttons activates the internal speaker when the handset is off-hook. This can be used if others must hear the conversation. When the handset is returned to the cradle, this setting is reset so that if the handset is again removed from the cradle, the internal speaker is not active.

Pressing the CTL + VOLUME Down buttons mutes the internal speaker indefinitely. Pressing VOLUME Up, VOLUME Down, CTL + VOLUME Up, or removing the handset from the cradle and returning it resets the setting.

CTL (Control) Button

The CTL button, when used in conjunction with various other buttons, can perform additional features of the desk set.

IC (Intercom) Button

Use this button to communicate between desk sets without transmitting over the radio channel. When the IC button is pressed and held, microphone audio is routed to the line without activating the radio transmitter. Other desk sets on the same line will hear the audio automatically. Note that when configured for 4-wire operation, the internal intercom path must be enabled by the CARD Suite software for parallel units to hear intercom audio.

MONITOR Button

When the MONITOR button is pressed, the desk set, adapter, and the radio are placed in the monitor mode (CTCSS/CDCSS disabled), the MONITOR LED illuminates, and the display indicates MON. Press this button before making a call to ensure a clear radio channel is available.

TRANSMIT Button

Press this button to place the desk set in the transmit mode. See the "Initiating Calls" section. When the TRANSMIT button is pressed, the TRANSMIT LED illuminates, and MONITOR LED extinguishes (if Monitor is selected prior to transmitting). The display indicates the mode and current frequency selected. In the IPE2500A, the TRANSMIT LED flashes when a parallel unit is transmitting. Transmission is not allowed in this state.

SELECT Button

When using the IPE2500A in normal operation, the SELECT button can be used to enter the frequency selection mode. If Direct DTMF dialing is enabled, this method and the use of programmable buttons are the only ways to change the selected frequency.
NOTE: The SELECT button cannot be used for this function on the IPE2500A-MLS.

Keypad Buttons

The numeric keypad is used for the selection of a desired frequency page capcode entry and direct DTMF dialing. See "Numeric Keypad Frequency Selection," "Paging" and "Direct DTMF Dialing" sections of the manual for further information.

Parallel Status Operation

The IPE2500A supports parallel status updating. This feature allows **all** dispatch positions to know the status of the base station.

To decode this information, the unit senses high level guard tone (HLGT), then decodes the function tone that follows. Due to various tone control schemes supported by the unit, it is important to understand the rules of decoding the function tones.

1. If the monitor function is decoded, the unit is placed into the monitor mode. If any transmit function tone is programmed to be the same as the monitor function tone, that transmit tone will not be decoded.

2. If two transmit function tones are programmed to the same frequency, only the first of the tones in the sequence will be decoded; the subsequent transmit function tones set to the same frequency will not be decoded.

3. If a PTT function tone is programmed, it is not decoded since this does not contain channel control information. If a transmit function tone is programmed to be the same as the PTT function tone, the transmit function tone will not be decoded.

4. If a transmit function tone is programmed to be the same as a tone supervisor tone, the supervisor function will be decoded.
   To illustrate, the priorities of the decode function are as follows:

Highest priority:	Monitor Function Tone
	Supervisor On Function Tone
	Supervisor Off Function Tone
	PTT Function Tone
Lowest priority:	Transmit Function Tone (F1 to F15, F16 with Monitor disabled)

NOTE: Parallel status update operation is not available with the Model IPE2500-MLS.

Frequency Display

When shipped from the factory, the LCD display shows FREQ: XX, with XX being 1 to 16, depending on the selected frequency.

Each time the IPE2500A is powered up, the status of the base/radio is unknown. The desk set LCD display flashes the last selected frequency when the unit was powered down. The display continues flashing until a transmission or frequency change is entered, or a parallel unit initiates a transmission or frequency change. Each time a guard tone is detected on the line, the desk set assumes the status of the base/radio is unknown until a function tone is decoded at the proper time.

Note that the display remains flashing even when a monitor command is initiated after power-up. This is because the monitor command does not control which frequency is being monitored and the state of the base/radio is still unknown.

Since the IPE2500A-MLS does not support parallel status updating, the displayed frequency or alias is never flashed. The operator must ensure that the base station is on the proper frequency.

Numeric Keypad Frequency Selection

The IPE2500A can be configured for multiple frequency control with the CARD Suite Programming Software. When the desired frequency is selected using the numeric keypad, that frequency change command is sent to the base. Other parallel units will reflect the newly selected frequency. Note that if Direct DTMF is enabled, the numeric keypad is used for direct DTMF dialing. To select a frequency on an IPE2500A only, the operator must first press the SELECT button. To select a frequency when nine or fewer function tones are enabled, press the corresponding button 1 through 9 on the numeric keypad. The unit automatically sends the command when the key is pressed.

- When ten or more frequencies are enabled, use keypad buttons 2 through 9 to select frequencies 2 through 9.
- To select frequency 1, press 0, then 1.
- To select frequencies 10 through 16, press 1, then press 0 through 6.

If a disabled frequency is selected, the display shows: DISABLED FREQ. Pressing CLEAR exits the frequency selection mode without changing the selected frequency. To scroll through the enabled frequencies display, press * to scroll down and # to scroll up.

After the desired frequency has been selected, the operator may:

- Press SELECT to select the frequency and exit the frequency selection mode.
- Press MONITOR to select the frequency, exit frequency selection mode, pause 250 ms and send a monitor burst to monitor the newly selected frequency.
- Press and hold TRANSMIT or the handset PTT bar to select the new frequency, exit the frequency selection mode and begin transmitting on the newly selected frequency.

PTT Function Tone (Key-up Only Function Tone)

This feature, compatible with tone and optional E&M with tone control, allows the desk sets to use only a single function tone burst generation when a voice transmission is required. The parallel status updating function is also modified. This is useful when the base station is only capable of one frequency control or when wildcard frequency keying is required.

- When a frequency change command is sent, the desk sets generate normal HLGT and frequency function tones.
- When the monitor function is sent, the normal monitor command is sent.
- When a voice transmission is required, the HLGT and programmed PTT function tone is sent as the transmit command. No channel frequency function tones are used during a voice transmission.
- When a parallel unit transmission is detected, the parallel status updates the selected function tone only if the frequency falls within programmed function tone frequencies. When a parallel PTT function tone is detected, the function tone of the unit is not updated and continues to be unknown (flashes) until a frequency change command is detected.

Tone Supervisor Control

The IPE2500A offers a tone supervisor control feature which locks out transmission of parallel units upon detection of the proper tone control sequence. This feature cannot be activated during a parallel transmission. The supervisor unit is programmed with appropriate on/off frequencies and a supervisor button. Parallel, non-supervisor units are programmed with the same on/off frequencies.

When the supervisor unit operator presses the supervisor button and turns on the supervisor function, programmed parallel units will not allow any transmission and their keyboards will be locked. The display flashes SPV until the supervisor turns the function off.

The IPE2500A can optionally be configured for relay controlled supervisor using a relay programmable button.

"Hard" Supervisor Control

To ensure parallel units are locked out of transmission upon demand by the supervision position, the relay I/O module should be used and the supervisor unit placed closest to the transmitter or adapter. Note that tone supervisor cannot be activated during a parallel transmission.

Secure Operation

When using Tone or E&M with Tone control, it is possible to use 2-function tone generation to adapt to certain secure capable systems. Parallel status does not support this mode of operation.

In this configuration, the IPE2500A generates a HLGT, a coded/clear function tone, then the channel control function tone. Each of the coded and clear function tones are programmable to the same frequencies as the channel control function tones and is the same level.

NOTE: A programmable button should be used to toggle the state of the unit from coded to clear transmission mode.

By adding factory or field-installed options, other types of control, besides tone, may be used.

DTMF Decode

The DTMF decoder is primarily used for automatic number identification, or ANI, by the dispatch operator. ANI is used to communicate to a dispatcher the identity of the transmitting radio. This use of DTMF is transmitted only in one direction without the receiving unit acknowledging the receipt of information.

When the field unit presses the PTT button of the radio, the radio generates a preprogrammed sequence of DTMF digits prior to opening the voice path of the radio. The IPE2500A decodes these digits and displays the ID either numerically or with a preprogrammed alias. The dispatcher then knows, without the field radio user having to speak his identity, which radio is being received.

H.E.A.R. System Operation

The H.E.A.R. (Hospital Emergency Administration Radio) system operation is typically used in hospital emergency rooms. During H.E.A.R. operation, the internal speaker of the IPE2500A would typically be muted so that normal radio traffic is not heard in the emergency room. A DTMF sequence is transmitted, prior to voice transmission, by ambulance or public safety personnel to access the emergency room's radio system.

To perform H.E.A.R. functions, the desk set contains a base ID used to deactivate the speaker mute. When the desk set decodes a valid DTMF sequence, it compares the sequence to the H.E.A.R. base ID. If the ID matches, the desk set unmutes the speaker, allowing received audio to be heard by emergency room personnel. The unit must be returned to mute mode manually.

The speaker mute is achieved by programming a mute button using the programmable buttons found on the front panel of the IPE2500A. An optionally installed H.E.A.R. system relay and/or audible 2 kHz alert tone of programmable duration can also be programmed for activation upon receipt of the proper base ID. Refer to the CARD Suite Help file for detailed programming instructions.

NOTE: H.E.A.R. System operation or DTMF Decode is not available with the Model IPE2500A-MLS.

Optional DC Control Kit

NOTE: This optional feature requires the XDC0001A DC Control Kit and XAC0100A Mounting Kit.

DC currents from+14 to –14 mA in 0.5 mA increments are used to control radio functions. Parameters for dc control are set using the programming software. However, the accuracy of the adjustments may be affected by line loads and installations. In order to work properly with varying line loads and dc remote adapters, the time the current is present before allowing key-down may be programmed with the software. Appropriate settings ensure the state of the remote adapter can be assured when a frequency change current is asserted.
NOTE: JU1 on the power I/O board (DPS) must be "out" for DC Control.

Optional Relay Control Kit

NOTE: These optional features require the XRC0001A Relay Control Kit and XAC0100A Mounting Kit.

The CARD Suite programming software can be used to assign the type of configuration desired. It can be configured as E&M control, local, or E&M with Tone control. Two pair of leads controls communication between the IPE2500A and the base station. Maximum load ratings for each relay output are 1 A @ 125 V ac and 2 A @ 30 V dc.

Local Control

For applications where the radio is connected directly to desk set units on-site, the unit must be configured for local control. Also, a PTT and monitor relay must be programmed with the CARD Suite, and these connections must be made to the relays.

E&M

The CARD Suite can be used to configure the IPE2500A for E&M control. The unit can be configured for either E&M control or E&M with tone control. Two pairs of leads control communication between the desk set and the base station. One pair is dedicated to audio TX/RX, the other pair controls the E&M signaling.

The IPE2500A uses the M lead to signal when to transmit, and the E lead to detect when to receive. Note that the E lead is not required. The M lead must be set on relay module using the CARD Suite software.

E Lead

In systems requiring full-featured E&M control, the input can be configured as an E lead to indicate an unsquelched condition. The IPE2500A uses this input as a VOX indicator, so when asserted, generates a VOX condition. However, the speaker squelch is operated by voice activity.

M Lead

A closure is needed to act as the M lead, which is the relay closure. The M lead will be closed depending on the type of configuration and the type of transmission, only during a non-intercom transmission.

- When configured as E&M control, the relay will be closed only when a transmission requiring transmitter keying is needed.
- When configured as E&M with Tone control, the relay will be closed whenever a non-intercom transmission is done.

E&M with Tone Control

Used for transmitting control tones using an RF device in lieu of a telephone line. Two pair of leads control the high level guard tone, function tone and low level guard tone. The tones are generated by the IPE2500A to base stations via the E&M leads.

The M lead is used to assert PTT of the device, allowing transmission of the control tones to a remote adapter with a receiving RF device. The unit must be configured for E&M with Tone control and M lead must be set on relay mode. Note that the HLGT duration may need to be increased to allow the RF device time to keep up and transmit to the receiving device.

Multi-line Select (IPE2500A-MLS)

NOTES:

1. **This operation requires IPE2500A-MLS Desk Set or XMLS001A Field Install Kit and XAC0100A Mounting Kit.**
2. **With the MLS option installed, the DC and Relay options cannot be used.**
3. **With the MLS option, the SELECT button cannot be used to enter the frequency selection mode.**

The multi-line select operation allows the unit to control up to four base stations with one tone remote unit. This feature is provided standard with the IPE2500A-MLS, and can be added to the IPE2500A via the XMLS001A 4-Line Field Install Kit. The features include:

- Tone remote control of two to four different base stations
- Vox-detect indication for each line
- Unselect audio reference adjustment
- Multi-select transmission
- Mute unselect audio on transmit
- Unselect audio mute using a programmable button
- 2-wire or 4-wire compatible

NOTE: The addition of the line select option to the IPE2500A allows the unit to control multiple base stations with one unit using tone remote control. The option is not compatible with dc or local control configurations.

Since the option is an ancillary device, some limitations are imposed on the operation of the unit. These limitations include:

- The LOTL detection and parallel status updating features of the IPE2500A are not available when the multi-line select option is installed because the IPE2500A receives a sum of the select and unselect audio and cannot distinguish the source of the audio.
- During multi-select transmissions, the same control tones are used on each line. The unit is not capable of generating different function tones on each line during a multi-select transmission.
- The channel aliases are shared among all lines.
- The volume control becomes a master volume for select and unselect audio. The relative level of the unselect audio to the select audio can be adjusted during operation.
- DTMF Decode is not available.
- H.E.A.R. operation is not available.

Line Selection

When the unit is initially powered up, line 1 will be selected and the display will indicate the current lines selected. You can select a line by either of two methods with the proper programming of the unit: Quick-Select, or by using the Line Selection Menu.

NOTE: The number of selectable lines must be programmed in CARD Suite under the Tone Control/TX functions.

Quick-Select Line Selection

If the programmable button(s) have been properly configured, pressing the associated button selects the desired line or lines. The display shows the line(s) selected and the associated programmable button LED lights if so configured. Previously selected lines become unselected.

Line Selection Menu

Press SELECT while in normal operation to enter the Line Select Menu. The display will show either a number or a '_' for each line that is available. If a number is display, that line is currently selected. Otherwise, the line is not selected. Use numeric buttons 1 through 4 to select or unselect a line, or to select multiple lines. Upon selection, the display indicates which line(s) is selected. If a programmable button has been assigned to the line selected, the associated LED lights.

After selecting the desired line(s), press SELECT to exit the Line Selection Menu. As an alternative, TRANSMIT, MONITOR or ALERT can be pressed to exit the Line Selection Menu and immediately begin a transmission or set the base station in monitor.

Since parallel status updating is not possible in the IPE2500-MLS, the operator should ensure that when selecting a line that the desired frequency is set.

Unselect Audio Mute

To mute the unselect receive audio, a programmable button must be configured for mute operation using CARD Suite. Upon activating unselect mute, an 'M' will be seen on the right side of the second line of the display. This mute can be configured for a timed duration or infinite. To deactivate the unselect mute, press the configured mute button a second time or change the unselect volume while in the line select menu.

In addition to manually muting unselect receive audio, it is possible to mute the unselect receive audio during transmission using CARD Suite. If enabled, during a transmission, the unselect receive audio will be muted so that it does not interfere with the operator microphone audio. Upon ceasing transmission, the unselect receive audio will be unmuted.

Multi-Select

A programmable button can be configured for multiple line selection. Once programmed, this button can be used for the Quick-Select method. Alternately, the Line Selection Menu can also be used to select a number of lines individually.

When more than one line is selected, all transmit-path relays on the line select board are disengaged so that lines are not physically connected together through the line select board during receive mode. This also causes all receive audio to be subjected to the unselect volume setting and unselect mute feature. Upon transmission, the appropriate transmit-path relays are engaged. When the transmission is ceased, the relays are again disengaged.

Vox-Detect Indication

As stated previously, the vox-detect status can only be indicated for a line if a programmable button has been assigned to the line. With a button assigned to the line, the LED serves to indicate both the selected line and the vox-detect status. The vox-detect is indicated two different ways.

Vox-Detect on an Unselected Line

When a particular line is not selected, the associated button LED is not lit. When activity is detected on the line, the LED blinks on and off at a constant rate with equal on and off times. When the vox is no longer detected, the LED extinguishes approximately two seconds later.

Vox-Detect on a Selected Line

When a particular line is selected, the button LED associated with the line is lit. When activity is detected on the line, the LED blinks on and off at a constant rate, but will be on twice as long as off. This provides a method for the operator to know the vox status and the line-selection status. When the vox is no longer detected, the LED stops blinking approximately two seconds later.

Unselect Volume Adjustment

The unselect volume adjustment is, in effect, an attenuation of the summed unselect audio. This allows the unselect audio to remain 'in the background' when both select and unselect audio are both present. To adjust the unselect audio:

1. Enter the Line Selection Menu by pressing SELECT while in normal operation.
2. While in the Line Selection Menu, press VOLUME UP or Down to adjust the unselect volume.
3. To exit the Line Selection Menu, simply press select again.

Optional External Speaker Kit

NOTE: This optional feature requires the XAC0120A External Speaker Kit.

The XAC0120A External Speaker Kit includes all the components necessary to provide external monitoring of the unselect channels of an IPE2500A-MLS Multi-Line Desk Set.

Please refer to Pub. 43003-029 included with the kit for specific installation instructions.

Alert Tones

Alert tones are selectable via the programmable buttons. Using the programmable buttons on the desk set three types of alert tones are available. Refer to the CARD Suite Programming Software Help file for programming instructions.

- A continuous 1004 Hz alert tone.
- A pulsed 1500 Hz alert tone; 250 ms on/off.
- A warble alert tone; 250 ms at 800 Hz, 250 ms at 1500 Hz.

The ALERT button on the IPE2500A allows you to select from two types of alert tones to be transmitted:

- Pressing the ALERT button generates a continuous tone of 1004 Hz.
- Pressing the CTL + ALERT buttons generates a pulsed alert tone on 1500 Hz, 250 ms on and 250 ms off.

Paging

The IPE2500A supports the following formats:

- DTMF
- Immediate DTMF
- 2-tone
- 5-tone
- 1500
- 2805
- Custom 2-tone (available only in alias table)

NOTE: In many applications below 800 MHz, the maximum allowable signaling time, as prescribed by FCC regulations, is 3 seconds and only signal once. Therefore, be sure that regulations applying to this system are not violated before programming the tone length values that would cause the console to signal for more than the allowed time.

It may be necessary to program the Page PTT (push-to-talk) function tone frequency and the pretime value for these paging modes. If the Page PTT frequency for a particular channel is disabled, the function tone used when paging (on that channel) will be the same tone used during a normal transmission.

The PPT pretime compensates for delay in the system that may inadvertently cut off part of the paging tones. The pretime value is the amount of time in ms before paging tones begin.

Paging may be initiated by entering digits on the numeric keypad, by programming an alias using the CARD Suite Programming Software, by configuring any of the programmable buttons, or by PC control. The alias feature allows user-determined names to be assigned to specific paging capcodes. This permits selecting a frequently-used paging sequence by name rather than by re-entering digits on the keypad.

Entering the Paging Menu

Make sure the IPE2500A is in normal operation. Press the PAGE button. The normal status line appears at the top of the LCD display. The second line displays the paging type and spaces to indicate the number of capcode digits that must be entered.

Selecting the Page Type

The available page types are set by the CARD Suite software. Use SELECT to cycle forward or CTL + SELECT to cycle backward through the enabled types.

Entering Capcode Digits for Paging

If the desired capcode is not currently selected, a new capcode may be entered:

Use the numeric keypad buttons to enter the paging capcode digits. Enter the digits A, B, C or D by pressing CTL + 1, CTL + 2, CTL + 3, and CTL + 4. Enter the digits E and F by using the * button and # button, or by using CTL + 5 and CTL + 6.

The LCD displays the capcode as it is entered from right to left. As new digits are entered, the previous digits move one position to the left and the new digit is entered in the right-most location. If another digit is entered after all the blanks are filled, the capcode is cleared and the user must start over. Pressing the CLEAR button clears the capcode. All blanks must be filled in or the transmission cannot be initiated. The maximum number of digits that can be entered is programmed with your CARD Suite software.

Entering a Programmed Alias

If paging aliases have been programmed into the desk set, press either the UP or the DOWN button after entering the paging menu. To scroll alphabetically, press the combination of either CTL + UP or CTL + DOWN buttons. The alias that begins with the next (or the previous) letter of the alphabet is displayed.

Sending the Page

When the desired page appears on the display, press MONITOR to make sure the radio channel is not in use. If programmed with an auto-channel selection, the unit selects that channel before sending the monitor control.

When the channel is free, press TRANSMIT. Paging tones are generated and the LCD displays:
TALK NOW (This is provided that talk time has been enabled for this type of paging or alias.)

Mic audio is transmitted to the paged individual. When the preprogrammed talk time has elapsed, the desk set exits the paging mode and returns to normal operation. If the 'do not revert' option is selected, and the auto channel selection is programmed for a paging alias, the unit remains on the same channel until changed by the user.

2-Tone Paging Example

Example 1

Suppose the number of 2-Tone keypad digits accepted from the user on the selected channel is 2, and Code Plan R has been selected. The 8-second group call has been selected and the preset 2-Tone digit is 7. Also, the A tone length is set to 1 second and the B tone length is set to 3 seconds.

If the console operator entered the digits 43 and pressed the TRANSMIT button, the console would generate 1251.4 Hz for 1 second followed by 669.9 Hz for 3 seconds. These tone frequencies are located on Tone Group Frequency Chart according to the following procedure.

1. Locate the chosen code plan (R in this example) on the Code Plans Table on page 27.

2. From the same chart, locate the most significant digit (MSD) of the 2-Tone prefix (7 in this example).

3. Next, determine the 2-digit number that appears at the intersection of the code plan row and the MSD column (62 in this example).

4. The first digit of this number (6 in this example) corresponds to a number under the Group # heading on the Tone Group Frequency Chart on page 28, and indicates which row of frequencies on the chart will be used for the A tone. In this example, the A tone number entered by the console operator is 4, which corresponds to 1251.4 Hz.

5. The second digit of the number from chart B (2 in this example) also corresponds to a number under Tone Group Frequency Chart Group #, and indicates which row of frequencies on chart will be used for the B tone. In this example, the B tone number entered by the console operator is 3, which corresponds to 669.9 Hz.

The previous example involves the console operator being required to enter two digits from the keypad (programming the number of 2-Tone digits accepted from the user on the selected channel to 2).

However, if all three digits were required from the console operator (programming the number of 2-Tone digits accepted from the user on the selected channel to 3), the procedure for finding the frequencies from the Tone Group Frequency Chart would be the same, except that the most significant digit of the prefix would be the first digit entered from the keypad.

If no digits were required from the operator (programming the number of 2-Tone digits accepted from the user on the selected channel to 0) both the A and B tone frequencies would be predetermined through programming and the same tone sequence would be sent every time a 2-Tone page is generated on this particular channel.

Group Call

A group call occurs when both tones of a 2-Tone paging sequence are the same frequency. If the console is programmed to allow 8-second group calls on a particular channel, then whenever a paging sequence is generated that consists of two tones of the same frequency, the page consists of an 8-second burst of that tone frequency.

However, 8-second group calls do not apply when the GE code plan has been selected. In the GE system, a “diagonal” tone of 742.5 Hz is inserted in place of the first tone if that tone is the same as the second tone.

Example 2

Suppose the number of 2-Tone keypad digits accepted from the user on the selected channel is 2 and the GE code plan has been selected. The preset 2-Tone digit is 4.

Therefore, if the operator entered 55 as the paging digits and pressed the TRANSMIT button, the console would send the 2-Tone sequence A = 742.5 Hz, B = 907.5 Hz. This would alert a pager with a GE capcode of 455.

Important NOTE: The 1st digit indicates Chart A Group # Source for the A tone, and the 2nd digit indicates Chart A Group # Source for B Tone.

Code Plans Table

Code Plan	MSD Digit of 3-Digit Capcode									
	0	1	2	3	4	5	6	7	8	9
Gen Enc	42	11	22	12	44	55	21	45	54	24
Gen Enc Modified	42	11	22	33	44	55	66	DD	EE	FF
B	N/A	11	22	33	12	13	21	31	23	32
C	N/A	11	22	12	44	14	21	41	24	42
D	N/A	11	22	12	15	55	21	51	25	52
E	N/A	11	22	12	21	16	66	61	26	62
F	N/A	11	13	33	44	31	14	41	34	43
G	N/A	11	13	33	31	55	15	51	35	52
H	N/A	11	13	33	31	16	66	61	36	63
J	N/A	11	14	41	44	55	15	45	54	51
K	N/A	11	14	41	44	16	66	61	46	64
L	N/A	11	15	51	16	55	66	61	56	65
M	N/A	23	22	33	44	32	24	42	34	43
N	N/A	23	22	33	32	55	25	52	35	53
P	N/A	23	22	33	32	26	66	62	36	63
Q	N/A	24	22	42	44	55	25	45	54	52
R	N/A	24	22	42	44	26	66	62	46	64
S	N/A	25	22	52	26	55	66	62	56	65
T	N/A	34	43	33	44	55	35	45	54	53
U	N/A	34	43	33	44	36	66	63	46	64
V	N/A	35	53	33	36	55	66	63	56	65
W	N/A	46	64	56	44	55	66	45	54	65
Y	N/A	77	88	99	78	79	87	97	89	98
GE	AA	BA	BB	AB	CC	CA	CB	AC	BC	N/A
SP	99	AA	BB	DD	9D	D9	AD	DA	BD	DB

Tone Group Frequency Chart

The chart below cross-references the 2-Tone Paging Code to the frequency in Hz.

Tone Group #	0	1	2	3	4	5	6	7	8	9	Group #
1	330.5	349.0	368.5	389.0	410.8	433.7	457.9	483.5	510.5	539.0	1
2	569.1	600.9	634.5	669.9	707.3	746.8	788.5	832.5	879.0	928.1	2
3	1092.4	288.5	296.5	304.7	313.0	953.7	979.9	1006.9	1034.7	1063.2	3
4	321.7	339.6	358.6	378.6	399.8	422.1	445.7	470.5	496.8	524.6	4
5	553.9	584.8	617.4	651.9	688.3	726.8	767.4	810.2	855.5	903.2	5
6	1122.5	1153.4	1185.2	1217.8	1251.4	1285.8	1321.2	1357.6	1395.0	1433.4	6
A	358.9	398.1	441.6	489.8	543.3	602.6	668.3	741.3	822.2	912.0	7
B	371.5	412.1	457.1	507.0	562.3	623.7	691.8	767.4	851.1	944.1	8
Z	346.7	384.6	426.6	473.2	524.8	582.1	645.7	716.1	794.3	881.0	9
GE(A)	682.5	592.5	757.5	802.5	847.5	892.5	937.5	547.5	727.5	637.5	A
GE(B)	652.5	607.5	787.5	832.5	877.5	922.5	967.5	517.5	562.5	697.5	B
GE(C)	667.5	712.5	772.5	817.5	862.5	907.5	952.5	532.5	577.5	622.5	C
Plectron	643.0	910.0	1036.0	1082.0	1130.0	1287.0	1465.0	1820.0	1985.0	2688.0	D
10	1472.9	1513.5	1555.2	1598.0	1642.0	1687.2	1733.7	1781.5	1830.5	1881.0	E
11	1930.2	1989.0	2043.8	2094.5	2155.6	2212.2	2271.7	2334.6	2401.0	2468.2	F

Plectron Paging

The Plectron paging feature requires a 4-digit prefix (capcode). Like 2-Tone paging, the capcode and code plan will determine at what frequency the paging tones will be transmitted.

Plectron paging uses the Plectron Code Plan Chart and Plectron Tone Group/Frequency Chart. Refer to the example below and the tables to determine the capcodes you need.

Plectron Paging Example

Suppose the number of Plectron keypad digits accepted from the user on the selected channel is 0 and the capcode has been programmed to 3456. The A tone length is 1 second and the B tone length is 2 seconds.

If the console operator were to press the TRANSMIT button, the console would send an A tone of 330.5 Hz for 1 second, and then a B tone of 564.7 Hz for 2 seconds.

The frequencies for the A and B tones are determined from the charts that follow, according to the following procedure:

1. Locate the first two digits of the prefix (3 and 4 in this example) on the Plectron Page Code Plan Chart below.

2. In the column beneath this two-digit number, there are two P numbers (P5 and P6 in this example) that correspond to tone groups on Plectron Page Code Plan Chart. Using the P number for the third digit of the prefix, determine the correct tone group from the Plectron Tone Group/Frequency Chart on page 30.

3. Find the frequency of A tone (330.5 Hz) by locating the intersection of the tone group row with the column headed by the third prefix digit (5 in this example).

4. Find the frequency of the B tone is in the same manner by using the tone group for the fourth prefix digit as listed in the Plectron Paging Code Plan Chart below.

Plectron Paging Code Plan Chart

	Most Significant Digits-to-Tone Source																	
1st 2 (MS) Digits	00	01	02	03	04	05	06	07	08	09	10	11	12	13	14	15	16	17
3rd digit tone source	P1	P2	P1	P2	P3	P1	P3	P2	P3	P4	P1	P4	P2	P4	P3	P4	P5	P1
4th digit tone source	P1	P2	P2	P1	P3	P3	P1	P3	P2	P4	P4	P1	P4	P2	P4	P3	P5	P5
1st 2 (MS) Digits	18	19	20	21	22	23	24	25	26	27	28	29	30	31	32	33	34	35
3rd digit tone source	P5	P2	P5	P3	P5	P4	P5	P6	P1	P6	P2	P6	P3	P6	P4	P6	P5	P6
4th digit tone source	P1	P5	P2	P5	P3	P5	P4	P6	P6	P1	P6	P2	P6	P3	P6	P4	P6	P5

Plectron Tone Group/Frequency Chart (in Hz)

3rd and 4th Digits	0	1	2	3	4	5	6	7	8	9
Tone Group P1	643	672	701	732	765	799	834	871	910	950
Tone Group P2	992	1036	1082	1130	1180	1232	1287	1344	1403	1465
Tone Group P3	1530	1598	1669	1743	1820	1901	1985	2073	2164	2260
Tone Group P4	2361	2465	2575	2688	2807	2932	3062	3197	3339	3487
Tone Group P5	282.2	294.7	307.8	321.4	335.6	330.5	366.0	382.3	399.2	416.9
Tone Group P6	435.3	454.6	474.8	495.8	517.8	540.7	564.7	589.7	615.8	742.5

5-Tone Preamble Tone Number

Allows the selection of a 5-tone preamble number from the following list:
NOTE: This parameter affects alias paging as well.

Number	Frequency
#00	600 Hz
#01	741 Hz
#02	822 Hz
#03	1023 Hz
#04	1164 Hz
#05	1305 Hz
#06	1446 Hz
#07	1587 Hz
#08	1728 Hz
#09	1869 Hz
#10	370 Hz
#11	450 Hz
#12	550 Hz

Number	Frequency
#13	570 Hz
#14	650 Hz
#15	675 Hz
#16	750 Hz
#17	825 Hz
#18	850 Hz
#19	1010 Hz
#20	1240 Hz
#21	1520 Hz
#22	1750 Hz
#23	1860 Hz
#24	2135 Hz
#25	2280 Hz

Direct DTMF Dialing

The IPE2500A supports a configurable Direct DTMF dialing mode that allows the operator to quickly generate DTMF transmissions without the need to use preprogrammed aliases or the paging operation of the unit. This is useful for controlling repeater operation or accessing remote devices that use DTMF as a selective signaling protocol. The unit supports two different direct DTMF dialing modes: timed and PTT-controlled direct DTMF dialing.
NOTE: When Direct DTMF dialing is enabled, the numeric keypad can no longer be used to directly select a new frequency and the SELECT button must first be pressed to enter the frequency selection mode.

Timed Direct DTMF Dialing

To use timed direct DTMF dialing, the handset can be on- or off-hook. In this mode of operation, to begin a direct DTMF dialing sequence, the operator simply begins pressing the DTMF buttons in sequence. After the transmission is initiated, the unit will begin generation of the DTMF digits that have been entered. The display will show on the second line, "D-DTMF:" and the DTMF digits as they are generated. While in direct DTMF dialing, the operator can continue to enter DTMF digits during the direct DTMF dialing hang time described in the "Enabling Direct DTMF Dialing" section below. If the user presses and holds a DTMF button, the DTMF digit will be generated for the duration of the button press. If, however, the user simply taps a DTMF button or enters several digits in rapid succession, a 140-ms to 150-ms DTMF digit with 50-ms inter-digit time will be guaranteed. It is not necessary for the operator to wait for the generation of the DTMF digit to be heard as the unit will buffer up to eight button presses.

If the unit has been configured with a page PTT pre-time using CARD Suite, the unit will guarantee that the transmission has been initiated for this time before beginning generation of DTMF digits. The operator can press DTMF buttons during this time, but the digits will not be generated until the page PTT pre-time has elapsed.

After all digits have been transmitted, the operator simply has to wait until the direct DTMF dialing hang time expires, or press and release the main TRANSMIT button or handset PTT, and the unit will return to receive mode.

PTT-Controlled Direct DTMF Dialing

At any time, pressing the main TRANSMIT button or lifting the handset and pressing the handset PTT while off-hook will begin normal voice transmission. While holding the main TRANSMIT button or handset PTT, the operator can generate DTMF digits immediately by pressing a DTMF button. Voice audio will be muted during the generation of a DTMF digit and will be unmuted otherwise.

To generate the DTMF sequence, the operator simply presses the desired DTMF buttons to generate the proper sequence. As in timed direct DTMF dialing, a minimum 140-ms DTMF digit with a 50-ms inter-digit time is guaranteed. In order to return to receive mode, the operator releases the handset PTT.

If the unit has been configured with a page PTT pre-time using CARD Suite, the unit will guarantee that the transmission has been initiated for this time before beginning generation of DTMF digits. The operator can press DTMF buttons during this time, but the digits will not be generated until the page PTT pre-time has elapsed.

Direct DTMF Dialing Using Immediate DTMF Paging

If DTMF paging is enabled, it is possible to use the immediate DTMF paging feature to generate DTMF digits as well. The operation of direct DTMF dialing in the mode of operation is the same as timed direct DTMF dialing with the hang time being 2 seconds instead of the configured direct DTMF hang time. Note that if direct DTMF dialing is not enabled, immediate DTMF paging can still be used for generation of DTMF digits. Refer to the immediate DTMF paging section of the operator's manual for more information.

Audio Transmissions during Direct DTMF Dialing

During direct DTMF dialing, the transmitter remains keyed for the direct DTMF hang time for timed direct DTMF dialing or while the handset PTT is pressed during PTT-controlled direct DTMF dialing. Voice audio will be transmitted from either the internal or handset microphone while no DTMF digit is being generated. Upon ending the voice audio transmission by releasing the main TRANSMIT button or handset PTT bar, the unit will return immediately to receive mode.

Enabling Direct DTMF Dialing

As shipped, Direct DTMF Dialing is disabled. In order to utilize this feature, Direct DTMF Dialing must first be enabled and configured. To enable Direct DTMF Dialing, the internal diagnostics must be accessed by cycling power on the unit and pressing one of the four programmable buttons when lit during the boot cycle. Upon entering diagnostics, the unit will flash the four programmable buttons and display "MAIN DIAGNOSTICS." Pressing the PAGE button accesses the Direct DTMF Dial menu.

To toggle the feature on and off, press the PAGE button repeatedly. Each time the feature is enabled, the direct DTMF hang time will be defaulted to 500 ms. The direct DTMF hang time is how long the unit will continue to transmit after the release of a DTMF button. This time is programmable from 100 ms to 5000 ms (5 seconds) and is nonvolatile. The setting of this time is critical based on the intended application of the feature.

For example, using timed direct DTMF dialing, if the hang time is set to 500 ms and a two-digit DTMF sequence is required, the operator will have 500 ms from the release of the first DTMF button to press the second DTMF button. If the operator does not press the second button within the 500 ms, the transmission will cease and will be restarted when the second digit is pressed. While some devices may accept this, the loss of carrier by the receiving device may cause the first digit of the sequence to be discarded or ignored. In addition to the 500 ms between DTMF button presses, the unit will remain keyed for the direct DTMF hang time after the last DTMF button in the sequence is released upon which the unit will return to receive mode.

In 2-wire, half-duplex configuration, if the receiving device provides an acknowledgement tone after receiving a particular DTMF sequence, it must wait for the direct DTMF hang time before transmitting the acknowledgement. Otherwise, the unit will be transmitting and the operator will not hear the acknowledgement. If the receiving device cannot be configured to wait the direct DTMF hang time, 4-wire, full-duplex configuration should be used. In this configuration, receive audio is always available to the operator, even while the unit is transmitting.

To change the direct DTMF hang time, use the UP/DOWN or Volume UP/DOWN buttons. Once the desired direct DTMF hang time is selected, press the TRANSMIT button to exit direct DTMF dialing configuration. A second press of the TRANSMIT button will cause the unit to exit diagnostics and reboot.

RS-232 Input or PC Control

The RS-232 input feature allows a computer to send information, which will cause the desk set to initiate a page (without talk time), frequency change or custom tone transmission.

In order for the desk set to expect data from the RS-232 port and lock-out the desk set keyboard, a "^" (caret) and a <CR> (carriage return) must be sent to the desk set. If the desk set is not currently busy and in normal operation, it returns the ASCII string "018". At this point, control of the desk set from the front panel is not possible; however, it is recommended that the keyboard not be used during a PC direction of the unit. After the PC has received the "018", data may be sent to the desk set. The functions of PC Control are described below. Note that all bytes are represented in ASCII format.

Paging

Paging allows the PC to direct the desk set to transmit a paging sequence using a preprogrammed alias or a specified cap code. The behavior of each specific page type is controlled by the CARD Suite programmed parameters.

Byte	Value	Description
0	2	'2' (0x32): Always for Paging
1	0 or 1	'0' (0x30): Indicates an alias number is used '1' (0x31): Indicates a capcode is used
2	Page Type	'1' (0x31): DTMF '2' (0x32): 2-Tone '3' (0x33): Plectron '4' (0x34): 5/6 Tone '5' (0x35): 2805 '6' (0x36): 1500
	Y1	First ASCII digit of capcode or alias number (Most significant digit)
4	Y2	Second ASCII digit of capcode or alias number
5	Y3	Third ASCII digit of capcode or alias number
6	Y4	Fourth ASCII digit of capcode
7	Y5	Fifth ASCII digit of capcode
8	Y6	Sixth ASCII digit of capcode (Least significant digit)
9	X	Don't care/Unused

Example:
To send a 2-tone page using capcode 123 and the CARD Suite programmed settings for 2-tone paging:

PC to IPE2500A: '^', <CR>
IPE2500A to PC: '0', '1', '8' (Response)
PC to IPE2500A: '2', '1', '2', '1', '2', '3', '~' (Page transmitted)
IPE2500A to PC: '~' (Acknowledgment to PC that page is complete)

Alias paging works similarly to DTMF signaling with the alias number being as listed in the CARD Suite software for page aliases.

Frequency Changing

Frequency changing allows the PC to direct the IPE2500A to change the current transmit frequency to a newly specified transmit frequency such as F12.

Byte	Value	Description
0	5	'5' (0x35): Always for Frequency Change
1	Y1	First ASCII digit of frequency number to select (most significant digit)
2	Y2	Second ASCII digit of frequency number to select (least significant digit)
3 - 9	X	Don't care/Unused

Example:

To change the current frequency to F12:

PC to IPE2500A: '^', <CR>

IPE2500A to PC: '0', '1', '8' (Response)

PC to IPE2500A: '5', '1', '2', '~' (Frequency changed to F12)

IPE2500A to PC: '~' (Acknowledge that frequency change is complete)

Custom Tones

Custom tones allow the PC to direct the IPE2500A to initiate a transmission and generate a specified tone frequency. The unit remains keyed to allow additional tones to be generated until the PC directs the IPE2500A to cease transmission.

Byte	Value	Description
0	4	'4' (0x34): Always for Custom Tones
1	0 or 1	'0' (0x30): Cease Transmission '1' (0x31): Initiate Transmission (must remain '1'on subsequent tone generations)
2 - 3	MSW	Most significant word of ASCII frequency in hex
4 - 5	LSW	Least significant word of ASCII frequency in hex
6 - 9	X	Don't care/Unused

Example:

The frequency constant is calculated as (using C syntax):

MSW = 0x00ff & round (frequency * 8.192) >> 1
LSW = 0xFF00 & round (frequency * 8.192) >> 8

Therefore, to generate 1234 Hz followed by 567 Hz the frequency constants must first be calculated.
For 1234 Hz:

MSW = (0x00ff & round (1234 * 8.192)) >> 1
= (0x00ff & round (10108.928)) >> 1
= (0x00ff & 10109) >> 1
= (0x00ff & 0x277d) >> 1
= 0x7d >> 1
= 0x3e
MSW = '3', 'E' or (0x33), (0x45)

LSW = (0xff00 & round (1234 * 8.192)) >> 8
= (0xff00 & 0x277d) >> 8
= 0x2700 >> 8
= 0x27
LSW = '2', '7' or (0x32), (0x37)

For 567 Hz

MSW = (0x00ff & round (567 * 8.192)) >> 1
= (0x00ff & 0x1225) >> 1
= 0x25 >> 1
= 0x12
MSW = '1', '2' or (0x31), (0x32)

LSW = (0xff00 & round (567 * 8.192)) >> 8
= (0x00ff & 0x1225) >> 8
= 0x12 >> 8
= 0x12
LSW = '1', '2' or (0x31), (0x32)

To generate the tone sequence, the following must occur:

PC to IPE2500A: '^', <CR>

IPE2500A to PC: '0', '1', '8' (Response)

PC to IPE2500A: '4', '1', '3', 'E', '2', '7', '~' (Initiate transmission and generate 1234 Hz)

IPE2500A to PC: '~' (Acknowledge that tone is being generated)

<PC must time the duration for the tone.>

PC to IPE2500A: '^', <CR>

IPE2500A to PC: '0', '1', '8' (Response)

PC to IPE2500A: '4', '1', '1', '2', '1', '2', '~' (Keep transmission and generate 567 Hz)

IPE2500A to PC: '~' (Acknowledge that tone is being generated)

<PC must time the duration for the tone.>

PC to IPE2500A: '^', <CR>

IPE2500A to PC: '0', '1', '8' (Response)

PC to IPE2500A: '4', '0', '~' (Cease transmission)

IPE2500A to PC: '~' (Acknowledge transmission has ceased)

Planning the Installation

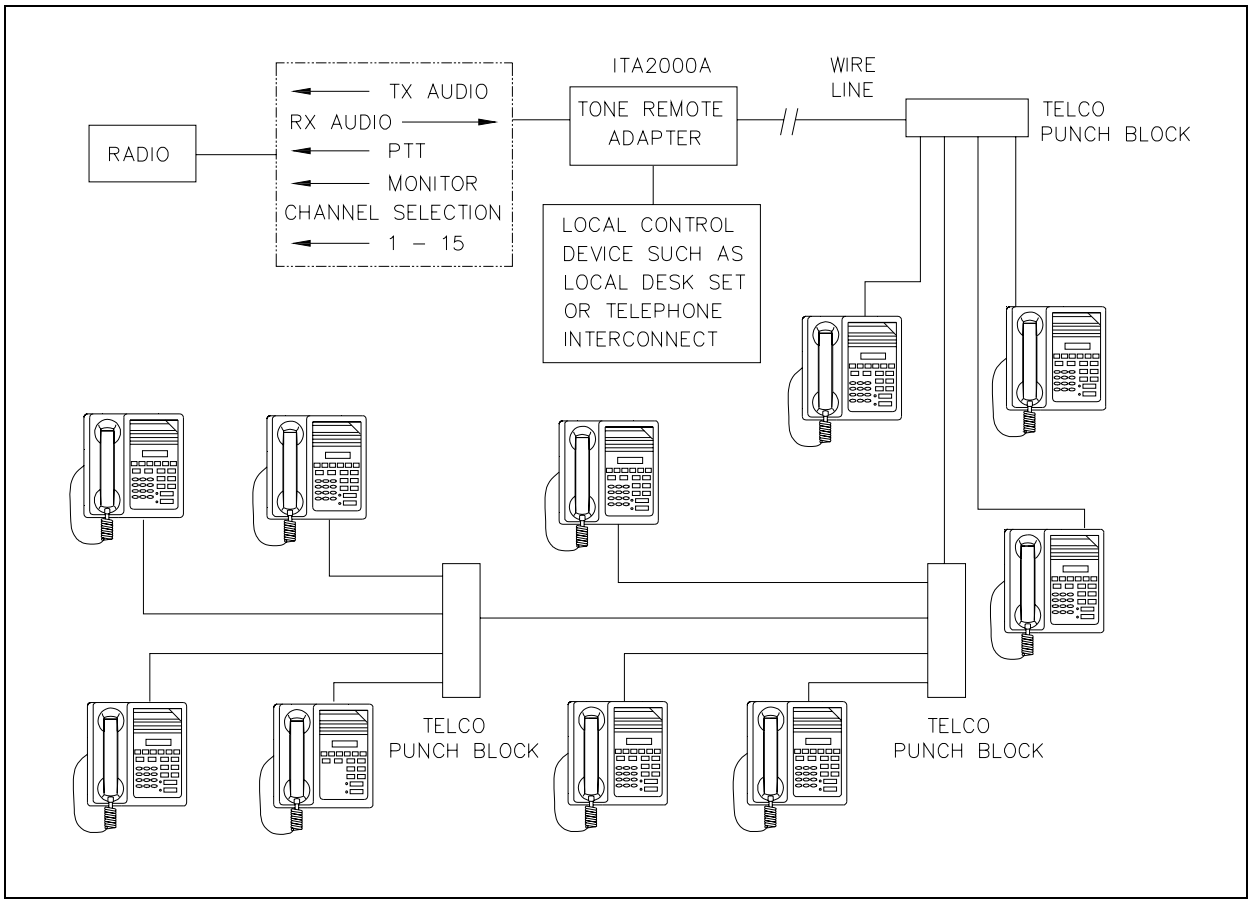

IPE2500A Sample Installation Diagram - Shown connected in parallel.

Mechanical Receipt Inspection

The desk sets are shipped in a cardboard container with inserts. Thoroughly inspect it as soon as possible after delivery. In-transit damage should be immediately reported to the transportation company.

Mounting

The desk sets can be placed on a desk or mounted vertically on a wall. To wall mount the desk set, remove the four bottom screws from the base and then rotate the base 180°. Reinstall the four screws to the base and rotate the handset hook located on the front of the unit.
NOTE: Certain configurations restrict wall mounting.

FCC Interference Warnings

The FCC requires that manuals pertaining to Class A and Class B computing devices contain warnings about possible interference with local and residential radio and TV reception. Please read these warnings and all safety information in the “Foreword” section of this manual.

Electrostatic Discharge (ESD) Protection

The IPE2500A have ESD protection circuitry that provides a high degree of protection against ESD, and power and telephone line surges. The circuitry shunts the transient currents to earth ground through the ground terminal. One of the two screws located on the back of the desk set can be used as an earth ground terminal. See the rear view of the desk set for the ground screw terminal locations.

The ground terminal must be connected to a high quality earth ground point to obtain maximum protection. Ideally, the ground point should originate at a 1/2-inch copper rod driven at least six feet into the soil with a No. 16 AWG (or larger) copper wire run to the ground terminal taking the shortest path possible. Where this is not possible, ground to a nearby water pipe or best available ground.

Equipment Required

Test Equipment:

- RF service monitor, or:
- an ac millivolt meter or Sinad meter to measure audio levels
- #1 Phillips screwdriver

Documentation:

- remote adapter information, if applicable
- these installation instructions

Cable Installation Safety Considerations

Wiring should conform to the Article 800 of the National Electrical Code. Use *listed* communication wiring and cabling for interconnection to other equipment that is suitable for the purpose. Cables should be *marked* as CM, CMP, CMR, or CMX as appropriate for the use.

Interconnecting data cables should be separated from electrical light or other Class I power cables by at least 2 inches. The exception is where Class I wiring or power circuits are run in a raceway or in metal-sheathed, metal-clad, or permanently separately from the conductors of the other circuitry by a continuous and firmly fixed nonconductor, such as porcelain tubes or flexible tubing in addition to the insulation on the wire. Interconnecting cables longer than 2 meters should be rated VW-1 or FT-1 or greater.

Telephone Line Lightning and Over-Voltage Protection

The IPE2500A has an over-current phone line fuse which protects against occasional extreme fault conditions that may get past the primary protectors. An example of such a fault condition is a power line cross. If the fuse requires replacement, use only with the same type fuse.

For maximum surge and lightning protection, building primary (over-voltage) protectors should be installed at the point where the telephone lines enter the radio equipment building. Primary protectors are usually required by local codes and should be provided by your leased line provider.

Power Connection

Connect the IPE2500A to the listed ac wall transformer, which supplies nominal 12 V dc. Optionally, the desk set can be powered by other dc sources. The operating range is 10.5 to 16 V dc. Refer to the power connection pinout on page 6 of the “Connectors” section of this manual.

Line Connection

Connect the telephone line to the modular connector located on the back of the desk set. Refer to the pinout on page 6 of the "Connectors" section of this manual. Observe right to left pinout for pins 1 through 6.

The 6-pin modular jack is a full/half duplex connection to the line. CARD Suite allows selection of a 4-wire type of connection to the line. In the 2-wire mode, the hybrid will be auto-balancing. A maximum of 10 desk sets can be connected in parallel. The maximum loss between any two desk sets or between a desk set and the station should not exceed 20 dB.

Desk sets are shipped with line terminations active. With parallel units connected, only the farthest desk set units should be terminated.

Line Considerations - Private Circuit

If leased lines from your local telephone company are used between the desk sets and the tone remote adapter, the telephone company (Local Exchange Carrier) may request a Facility Interface Code (FIC). The FIC is subject is to local availability.

Analog Facility Interface Code

FIC	Description
02NO2	2-wire private line; no signaling conversion by LEC (IN-Band).
02NO4	4-wire private line; no signaling conversion by LEC (IN-Band).
Metallic	2- or 4-wire metallic private line ("tip, ring, and sleeve circuits").

Within a manufacturing plant, a campus, or large building, customer-supplied 'metallic pairs' may be used. It is not necessary to have dc continuity on these lines.

Circuit Conditioning

The desk set is designed to work with good-quality analog speech band or leased private circuit. This was previously known as 'basic' conditioning under Series 2000/3002 service. The line must be non-PSTN (no dial tone, talk-battery, or signaling).

This equipment falls under the Category II, Tariff #260 Service and is exempt from FCC Part 68 registration. (Ref. FCC Form 730 Application Guide pages 1–5.)

For 2-wire operation over long lines, 2000 Series lines may be used with or without conditioning. C1 or C2 conditioning is available for these lines and relates to the envelope delay distortion and attenuation. A basic conditioned line may be used if it is the only type available. Overall system quality is limited by the quality of extremely long non-conditioned lines (copper).

Multi-line Select (IPE2500A-MLS)

NOTE: This operation requires IPE2500A-MLS Desk Set or XMLS001A Field Install Kit.

The IPE2500A MLS should have a default archive programmed into it. If it does not, or if the XMLS001A was purchased, install and configure the Line Select Option as follows:

Programming Changes

The following are necessary programming changes to make after installation of the line select option. Refer to the CARD Suite Programming Software Help file for additional information.

1. Use the CARD Suite software to select the number of lines being used (**2 to 4**).
2. Set the line configuration for ***4-Wire*** and ***Tone Control***.
3. Assign each line a programmable button. Assigning a programmable button allows you to take full advantage of the line select features. This is especially true if an indication of vox-detect on a line is desired.

Line Configuration - 2/4-Wire Selection

Each line must be configured as either 2-wire or 4-wire prior to installation. This selection is made with jumpers on the multi-line select module. Use the table below to determine the associated jumpers and shunt positions for each line.

NOTE: Refer to PCB layout drawing in the rear of this manual for jumper locations.

	Jumpers	2-Wire (Default)	4-Wire
Line 1	JU800, JU801	In	Out
Line 2	JU802, JU803	In	Out
Line 3	JU804, JU805	In	Out
Line 4	JU806, JU807	In	Out

MLS Line Termination

Line termination can be installed for each line on the multi-line select module. The board contains a 560-ohm resistor for line termination. Line termination should be installed if only one desk set is connected to the line or the desk set is a parallel desk set, and is farthest away from the tone remote adapter. To install line termination for a particular line, install the appropriate jumper from the table below.

NOTE: Refer to PCB layout drawing in the rear of this manual for jumper positions.

Line Termination Jumpers		Default
Line 1	JU812	In
Line 2	JU813	In
Line 3	JU814	In
Line 4	JU815	In

MLS Line-Level Normalization

The most important step in proper installation of the line select option is the normalization of the line level for each line. Normalization is necessary for the unselect audio level adjustment to function properly. This adjustment allows the unselect audio to be heard at a lower level than the select audio so that the operator can distinguish between the select and the unselect audio.

If not properly adjusted, the audio from one line may keep the IPE2500A compressor in compression. When the audio causing the compression is removed, and the compressor releases, it causes the lower audio levels to increase in perceived volume. This makes it difficult to detect the difference between select and unselect audio. Normalize the lines as follows:

1. Measure the nominal audio level on each line before input to the multi-line select module. The lowest measured nominal audio provides the reference level for all lines.
2. Adjust the appropriate pot (pots 1 through 4 for lines 1 through 4) to achieve unity gain through the line-select option while measuring at the appropriate DET test point for the reference line.
3. Lower all other lines to this reference level by adjusting each corresponding pot and measuring at each corresponding DET test point.

Making the Input Sensitivity Adjustment

Set the input sensitivity to ensure the unit's receive audio compressor functions properly. Using the reference level measured in Line Normalization step above, set the input sensitivity of the unit to the closest available setting. For example, if the reference level measured was –10 dB, set the IPE2500A input sensitivity to -9 dB. Refer to the "Level Settings and Diagnostics" section for instructions on setting the input sensitivity.

Making the Vox Detect Level Adjustment

The vox-detect level can be adjusted using pot 5 on the line select board. This adjustment is set to approximately -20 dB from the factory and normally does not need adjustment. To adjust the vox-detect level, perform the following steps:

1. Ensure that the unit has a programmable button assigned to each of the lines being used.
2. Input a tone at the desired vox-detect level into any line after completing step 3.
3. Adjust pot 5 until the LED for the programmed button assigned to the line begins to blink. The vox-detect level is now set.

Line Connection for MLS

After completing the steps above, connect the lines. Use the table below to determine the line connections on the line select board.

	Description	Pin
Line 1	2-wire RX/TX/4-wire TX tip	J801-1
	4-wire RX tip	J801-2
	2-wire RX/TX/4-wire TX ring	J801-3
	4-wire RX ring	J801-4
Line 2	2-wire RX/TX/4-wire TX tip	J801-5
	4-wire RX tip	J801-6
	2-wire RX/TX / 4-wire TX ring	J801-7
	4-wire RX ring	J801-8
Line 3	2-wire RX/TX/4-wire TX tip	J801-9
	4-wire RX tip	J801-10
	2-wire RX/TX/4-wire TX ring	J801-11
	4-wire RX ring	J801-12
Line 4	2-wire RX/TX/4-wire TX tip	J801-13
	4-wire RX tip	J801-14
	2-wire RX/TX/4-wire TX ring	J801-15
	4-wire RX ring	J801-16

DTMF/H.E.A.R. Functions

As noted in the "Operation" section of this manual, the IPE2500A must be manually placed in "mute" mode when used in a H.E.A.R. operation. This requires that one of the function keys to be programmed for mute operation. While in CARD Suite under the IPE2500A programming archive, select the Programmable Buttons tab. Select PB1–PB4 from either the Programmable Button Selection or the CTL + Programmable Button Selection (CTL + the programmable button means that the CTL button must be depressed while pressing the assigned mute button). Select the Mute function from the drop-down box. Be certain that the "mute duration" remains at "0" (on/off activation).

The parameters listed below are also programmable via CARD Suite Programming software. Refer to the CARD Suite Help file for detailed programming instructions.

DTMF Decode Inter-digit Time - Allows the decoder to qualify the duration of a DTMF digit and to further ensure that the DTMF sequence meets the desired customer specifications.

Minimum and Maximum Digit Count - Allows the decoder to ignore those DTMF sequences that are not actual ID's or ID's of interest; the IPE2500A is capable of decoding 1 to 8 digits.

DTMF Decode Alias - Provides alphanumeric display of the transmitting radio's ID.

H.E.A.R. System Base ID - This ID is used to determine whether the incoming DTMF sequence is to unmute the desk set speaker.

H.E.A.R. System Base ID Size - Allows proper comparison of an incoming DTMF sequence with the programmed ID.

H.E.A.R. System Flags - Include audible alert on/off and duration of the audible alert.

H.E.A.R. System Alert Relay - When an incoming DTMF sequence matches the H.E.A.R. system base ID, this optionally installed relay is asserted.

Audio Accessory/RS-232 Port

Use the 8-pin audio accessory/RS-232 port to connect a PC to the IPE2500A with the XAC0004A Programming Cable in order to use the CARD Suite Programming software. See the CARD Suite Software Help file for instructions on set up and programming options.

After programming is complete, connect an audio accessory, such as a desk microphone, gooseneck microphone, boom microphone, headset, or footswitch, if desired. The microphone input type is passive, with an input impedance of greater than 2k ohms and a nominal input level of -20 dBm.

Refer to the audio accessory/RS-232 port pinout on page 7 in the "Connectors" section of this manual.

Microphone Sensitivity Adjustments

After connections have been made, the IPE2500A must be configured for transmit and receive audio levels. These adjustments are made using the front panel buttons. The microphone sensitivity adjustment is used to compensate for different user voice levels and varied acoustical conditions. Refer to the following instructions to adjust the different microphones.

Internal Microphone

1. Place the handset in the cradle.

2. While holding down IC button, momentarily press VOLUME Up button (Δ).
   A single beep is heard to indicate that the microphone sensitivity level can be adjusted.
   No audible beep indicates the microphone sensitivity adjustment function is already enabled.

3. Press and hold TRANSMIT, speak into the internal microphone, and press VOLUME Up or VOLUME Down to increase sensitivity or decrease microphone sensitivity. **NOTE:** The display shows the relative TX level as a number between 1 and 5. To confirm the absolute level, measure the transmit level across the TX line pair using an ac millivolt meter or dBm meter.

4. After the adjustment has been made, press and hold the IC button, and momentarily press the VOLUME Down button. A single beep is heard to indicate the microphone adjustment has been saved and the adjustment function had been closed. No audible beep indicates the microphone adjustment function has already been closed.

Handset Microphone

1. With the handset off-hook, hold down the IC button and momentarily press the VOLUME Up button. A single beep is heard in the earpiece to indicate that the microphone sensitivity level can be adjusted. No audible beep indicates the microphone sensitivity adjustment is already enabled.

2. To adjust the sensitivity level, press the handset PTT button, speak into the handset microphone, and press VOLUME Up or VOLUME Down to increase or decrease the sensitivity level.

3. After adjustment has been made, hold down the IC button and momentarily press the VOLUME Down button. A single beep is heard to indicate the microphone setting has been saved, and the adjustment function has been closed. No audible beep indicates the microphone adjustment has already been closed.

Accessory Microphone

1. With the handset on-hook, hold down the IC button and momentarily press the VOLUME Up button. A single beep is heard to indicate that the microphone sensitivity level can be adjusted. No audible beep indicates the microphone sensitivity adjustment function is already enabled.

2. To adjust the sensitivity level, press the accessory microphone PTT/TRANSMIT button, speak into the accessory microphone, and press the VOLUME Up or VOLUME Down to increase or decrease the sensitivity level.

3. After the adjustment has been made, hold down the IC button and momentarily press the VOLUME Down button. A single beep is heard to indicate the microphone setting has been saved, and the adjustment function has been closed. No audible beep indicates the microphone adjustment function has already been closed.

Level Adjustments and Diagnostics

Main Diagnostics Selection

To enter the main programming mode:

1. Remove power from the desk set.
2. Reapply power and wait for the PB1 through PB4 LEDs to illuminate. (The display will indicate "checking parameters - please wait.") Press PB1, PB2, PB3, or PB4 to enter diagnostics.
3. The display will then indicate that the Main Diagnostics mode has been entered, and buttons PB1-PB4 can now be pressed. PB1 through PB4 are used to select different parameter changes from the default settings.

Programming Menu

The programming buttons, PB1 through PB4, are used to navigate the menu for specific installations and to perform diagnostics. They are:

- Line Output Level
- Line In Sensitivity
- Diagnostics
- Tone Level Adjustments

The diagram below illustrates which buttons to press to access the programming menu features.

Press:	To program:	
PB1	Line Output Adjust	Default: -10 dB
PB2	Line Input Sensitivity	Default: -9 dB
PB3	Internal Diagnostics:	

Press:	To program:
PB1	Relay Module Diagnostics **or** Line Select Module Diagnostics (depending on board installed)
PB2	DC Module Diagnostics
PB3	RS-232 Diagnostics
PB4	Keyboard Diagnostics

PB4	Tone Level Adjust	

Press:	To program:	
PB1	Sidetone Level Adjust	Default: 0 dBm
PB2	Alert Tone Level Adjust	Default: 0 dBm
PB3	Page Level Adjust	Default: 0 dBm

CTL+PB1	Toggle Compressors	

Press:	To program:
PB1	Toggle Microphone Compressor On/Off
PB2	Toggle Receive Compressor On/Off

Reloading Factory Defaults

Desk sets are shipped from the factory with default settings that meet most installation requirements. However, it is important to verify that these parameters are adjusted to meet your specific installation needs.

To reload factory defaults, enter the Main Diagnostic Selection as described above. After entering this mode, press CTL + VOLUME Up. The unit will automatically reset and show that the parameters are corrupt. Follow the instructions on the display. For some models, this may happen twice.

NOTE: If your unit has been programmed with CARD Suite software, reloading the factory defaults will reset all parameters that have been programmed.

PB1 – Line Output Adjust

An ac voltmeter or Sinadder meter should be connected across the line to achieve the proper level setting. Ensure that the line is terminated with a 600-ohm load.

After entering the Main Diagnostic selection mode, press the PB1 button. The display will indicate the current setting, which is set at the factory at -10 dBm. The range for this setting is variable from off to +12 dBm. See the Line Output Adjustment table for approximate settings. The desk set buttons are used as follows in the Line Output Adjust mode:

Button	Line Output Level Adjustment Mode Function:
VOLUME Up	Increases the output level, verifying the proper level with the meter connected to the line.
CTL + VOLUME Up	Increases the output level by 10.
VOLUME Down	Decreases the output level, verifying the proper level with the meter connected to the line.
CTL + VOLUME Down	Decreases the output level by 10.
TRANSMIT	Saves the current setting and exits back to the main selection mode.
MONITOR	Restores the previously programmed setting.
IC	Exits the line output adjustment mode without saving the selection, but maintains the current setting until the power to the unit is cycled. This is useful for experimenting with different settings.

Using a communications service monitor/analyzer and a tone generator/Sinadder, connect the analyzer to the radio base station antenna port. Inject a 1000 Hz tone into the input of the tone remote adapter (simulating console). Manually key the radio and adjust the level of audio signal to set the audio deviation of the radio to the desired level. Note the level of the tone, and using the Line Output Adjustment Table, program the desk set to the closest level.

Program the desk set's line level to the setting that approximates the audio level previously measured. Refer to the following table for these settings:

Line Output Adjustment Table

Setting	Line Level (600-ohm)
03	-10 dBm
07	-5 dBm
0C	0 dBm
18	+5 dBm
2D	+10 dBm

If an RF service monitor is not available, use a portable or mobile radio. Transmit to the station and measure the nominal voice audio on the desk set telephone line. Set the desk set receive level to the nearest level that was measured according to the table above.

Line Out Adjust for the IPE2500-MLS

The IPE2500A-MLS allows the adjustment of each of the four available lines. When setting line output levels for an MLS desk set, follow the same procedure described above but select the appropriate line to adjust using the programmable buttons: PB1 for line 1, PB2 for line 2, PB3 for line 3 and PB4 for line 4.

Multi-Select Considerations for the IPE2500-MLS

The architecture of the MLS board allows for simultaneous transmission on any of the four available lines. However, due to the design of the circuit, special considerations regarding line levels and line termination must be addressed. When a multi-select combination is engaged during transmission, the actual wire lines are physically connected together. If a line in the multi-selection has line termination enabled, it is presented as a load to the other lines in the selection during transmission resulting in a heavier load for the output driver. To provide compensation for this, the line output adjustment includes an additional setting that instructs the unit to add additional output gain during multi-select transmissions when lines in the selection have line termination enabled.

By default, line-termination compensation is enabled for all lines of the MLS board. If a parallel unit on a particular line provides the line termination but does not present a significant transmit load to the desk set, this compensation can be disabled using the CTL + PB1, 2, 3 or 4 combination. When line termination compensation is enabled, a 'T' will be seen to the right of the line out gain during the line out adjustment.

In addition to line termination compensation during multi-select transmission, the unit must select one line out gain during a multi-select transmission. In some installations, the line out gain of each line may not be the same. This allows for proper line level for single channel transmission. However, during a multi-select transmission, only one gain can be used. The gain used will be the highest gain of any selected line. Careful consideration during system installation should be observed to try to equalize the levels if multi-select transmissions are to be used often. High output level settings may result in distortion of the transmit audio particularly when three to four lines are selected.

PB2 - Line-In Sensitivity

After entering the main programming selection mode, press the PB2 button to allow adjustment of the line-in sensitivity. This adjustment allows the desk set to compensate for a range of 0 to 15 dB of line loss in 3-dB increments. The compensation is considered a pre-gain to the line-in circuitry of the desk set.

For example, if the RX audio output of the radio tone panel or ITA2000 is 0 dBm, and the telephone system has 10 dB of line loss, the desk set line input sensitivity should be set to level 4 (-9 dBm) to accommodate the 10 dB of incurred line loss.

After pressing the PB2, the display indicates the current line-in setting. The buttons function as follows:

Button	Line-in Sensitivity Mode Function:
VOLUME Up	Decreases the line-in sensitivity or reduces the pre-gain for the line input.
VOLUME Down	Increases the line-in sensitivity or increases the pre-gain for the line input line.
TRANSMIT	Saves the current setting and exits back to the main selection mode.
MONITOR	Restores the previously programmed setting.
IC	Exits the line-in sensitivity mode without saving the selection, but maintains the current setting until the power to the unit is cycled. This is useful for experimenting with different settings.

PB3 – Internal Diagnostics

Four internal diagnostic modes are available: (PB1) relay or MLS module diagnostics depending on the board installed, (PB2) DC module diagnostics, (PB3) RS-232, and (PB4) keyboard. After entering the Internal Diagnostics mode, they are accessed using the programming buttons as follows:

PB1 – Relay or MLS Module Diagnostics (depending on board installed)

Relay Module: This function is accessible via Main Diagnostics, then Internal Diagnostics (PB3). The Model XRC0001A Relay Option Kit must be installed in the unit under test. This function allows the relay I/O module to be exercised. The display indicates the status of:

- Inputs – IN
- Relay – OUT

By pressing any key (except TRANSMIT) starting at relay 1 and progressing up to relay 4, the relays close and then open. The numeral 1 in the OUT position indicates the relay should be closed. LEDs on the relay I/O module also indicate the status of each relay.

To exercise the inputs, each input can be grounded. This is indicated by a numeral 1 in the IN position associated with the input. As each input is shorted to ground, the corresponding 1 in the IN position indicates a 0.

Press TRANSMIT to exit the relay module diagnostics.

MLS Module: If the MLS module is installed (included in the IPE2500A-MLS or XML001A Kit) the line select board diagnostic replaces the relay module diagnostics shown above. This diagnostic allows the line select module to be exercised.

Button(s)	Line Select Module Diagnostics Function:
Any button except TRANSMIT.	By pressing any key, except TRANSMIT, starting at line 1 and progressing up to line 4, each line is selected and the previous unselected. The display and corresponding PB1 through PB4 LEDs indicate which line is currently selected.

Press TRANSMIT to exit the MLS module diagnostics.

PB2 – DC Module Diagnostics

This function is selected after entering Internal Diagnostics (PB3).

DC Module: If the dc module (XDC0001A Kit) is installed, this mode allows the board to be exercised with both positive and negative currents and sets the DCLOTL. The threshold for DCLOTL is adjustable, but is factory preset for most installations. The asterisk (*) is present in the lower right corner if the line voltage is above the preset DCLOTL threshold.

Button(s)	DC Module Diagnostics Mode Function:
VOLUME Up or VOLUME Down	Increases/decreases the dc value sent to the dc module. This value determines the dc current level and is a hexadecimal number ranging from 00 (lowest current) to 0x3F (highest current).
CTL + VOLUME Up or CTL + VOLUME Down	Works in the same manner as the function above, but increases or decreases the value by 10 rather than 1.
TRANSMIT	Exits the dc module diagnostic mode.
MONITOR	Toggles to the polarity of the current being generated. The display shows + for positive and - for negative polarity.
CTL + PB1	Allows the DCLOTL threshold to be set. In order for this setting to be done properly, a dc supply must be connected to the line pair with 3 volts. When CTL + PB1 to pressed, the unit reads the dc voltage on the line and saves the value for future DCLOTL operation.
CTL + PB4	Like CTL + PB1, this key sequence sets the DCLOTL threshold. However, no dc supply is needed. To set the threshold, set the current out into the proper line load (typically 8 kilohms) by using the VOLUME Up or Down buttons. When the proper current is reached, press CTL + PB4. The unit reads the voltage for future DCLOTL operation.

PB3 – RS-232 Diagnostic

This function is accessible via Main Diagnostics, then Internal Diagnostics (PB3), and exercises the RS-232 port TX and RX data. To run this test, disconnect anything connected to the programming connector on the back of the unit, and short pins 2 and 7 of the connector.

Once the short is completed, this unit sends data on the TX wire for receipt on the RX wire. If the same data is received on the RX wire, the unit continues to send data. If no data, or incorrect data is received, the unit stops sending data and displays failure.

Note that this diagnostic does not guarantee standard RS-232 levels. If the diagnostic functions, but the unit does not operate with a PC or printer, verify with an oscilloscope that the proper RS-232 levels are present.

Press the TRANSMIT button to exit the RS-232 diagnostics.

PB4 – Keyboard Diagnostic

This function is accessible via Main Diagnostics, then Internal Diagnostic (PB3) and verifies that the keyboard is operating correctly. After entering the keyboard diagnostic mode, the display shows:

KEYBOARD TEST
KEYCODE: xx

When any key is pressed (except TRANSMIT), the corresponding keycode is displayed. Refer to the keycode table that follows:

Button	Keycode (Hex)	Button	Keycode (Hex)
0–9	00 - 09	PB1 – PB4	30 - 33
*	0e	ALERT	45
#	0f	PAGE	44
TRANSMIT	No code (Will exit test.)	CLEAR	47
MONITOR	11	SELECT	46
IC	13	DOWN	40
VOLUME Down	20	UP	41
VOLUME Up	21		

Press TRANSMIT to exit the keyboard diagnostics.

PB4 – Tone Level Adjust

This function is accessible via Main Diagnostics mode select (PB4), and allows adjustment of the levels of sidetone (PB1), the alert tones (PB2), and the page tones (PB3). The tone level adjust will display, then select PB1, PB2, or PB3.

- The sidetone level used for speaker tones can be adjusted to suit the user.
- The alert and page tone line levels can be adjusted relative to HLGT.

PB1 – Sidetone Level Adjust Mode

This mode allows the adjustment of the sidetone level to -15 dB in 3 dB steps:

Button(s)	Sidetone Level Adjust Mode Function:
VOLUME Up or VOLUME Down	Increases/decreases the sidetone line level. Each time the VOLUME Up or VOLUME Down button is pressed, a beep is generated and the LCD display shows the new setting.
TRANSMIT	Exits the sidetone level adjust mode and returns the unit to the tone level adjustment screen.

PB2 – Alert Tone Level Adjust Mode

This mode allows the alert tone line level to be adjusted to -15 dB relative to the HLGT in 3 dB steps:

Button(s)	Alert Tone Level Adjust Mode Function:
VOLUME Up or VOLUME Down	Increases/decreases the alert tone line level. Each time the VOLUME Up or VOLUME Down button is pressed, a beep is generated and the LCD display shows the new setting.
TRANSMIT	Exits the alert tone level adjust mode and returns the unit to the tone level adjustment screen.

PB3 – Page Tone Line Level Adjust Mode

This mode allows the page tone line level to be adjusted to -15 dB relative to the HLGT in 3 dB steps:

Button(s)	Page Tone Line Level Adjust Mode Function:
VOLUME Up or VOLUME Down	Increases/decreases the alert tone line level. Each time the VOLUME Up or VOLUME Down button is pressed, a beep is generated and the LCD display shows the new setting.
TRANSMIT	Exits the page tone line level adjust mode and returns the unit to the tone level adjustment screen.

CTL-PB1– Toggle Compressors

This function is accessible via Main Diagnostics mode select (CTL-PB1), and allows the microphone (PB1) and audio receive compressor (PB2) to be enabled or disabled. The factory default is that both compressors are enabled.

It may be desirable, depending on background noise, that the compressor contributes to the noise floor of the microphone and/or receive audio. To reduce this possibility, the compressor for each can be disabled. However, care must be observed in the setting of the receive and microphone sensitivities since clipping of high-level audio signals is possible with the compressor disabled.

PB1 – Toggle Microphone Compressor On/Off

This mode allows the microphone compressor to be enabled or disabled:

Button(s)	Toggle Microphone Compressor On/Off
PB1	Toggles the microphone compressor on and off.
TRANSMIT	Exits the toggle microphone compressor mode and returns the unit to the toggle compressor screen.

PB2 – Toggle Audio Receive Compressor On/Off

This mode allows the audio receive compressor to be enabled or disabled:

Button(s)	Toggle Audio Receive Compressor On/Off
PB2	Toggles the audio receive compressor on and off.
TRANSMIT	Exits the toggle audio receive compressor mode and returns the unit to the toggle compressor screen.

General Desk Set Overview

The IPE2500A is a multi-processor design employing state-of-the-art DSP technology to achieve superior performance over typical analog and single-processor designs. This allows for ultimate flexibility in audio processing.

The heart of the design consists of U1, the DSP; and U3, the microcontroller. The DSP is responsible for audio processing of receive and transmit audio. This includes notch and line filtering, tone detection, tone generation, audio level compression and setting, and audio routing.

The microcontroller is responsible for controlling the functions of the DSP, programming, the LCD display, keyboard scanning, support of the relay, dc, and multi-line select modules and general I/O and general operational functions.

Receive Audio

Receive audio is presented to the desk set through the line transformer providing for the necessary load. The audio is buffered and switched by U14. U14 controls the source of the receive audio: line1 for 2-wire or line 2 for 4-wire operation.

The appropriate receive audio is then passed to the gain stage, consisting of U21 and U12. U12 provides the compression mechanism used by the DSP to keep the receive audio below the maximum level of approximately –6 dBm. This compressor can be disabled using the desk set diagnostics. After the receive audio has been properly compressed, it is passed to A/D section of U15 where it is converted to digital for use by the DSP and also to P400-12 for data conditioning.

The input impedance for 2-wire operation is controlled by U10. When U10-1 is asserted, the input impedance is 560 ohms. When U10-1 is unasserted, the input impedance is bridging.

Speaker Audio

Speaker audio is originated from the DSP in digital format. The DSP combines the receive audio, which is notched for tone control operation, side-tone, and beep tones to generate the speaker audio.

The speaker audio is converted to analog using the D/A section of U17. It is then passed through the volume control stage consisting of U13 and U22 before being passed to the handset earpiece and the speaker amplifier, U18.

The microcontroller or the DSP can mute the speaker amplifier. The microcontroller mutes the speaker audio using U5-C8, in cases such as parallel mute or the user muting via a key press. The DSP uses a speaker squelch algorithm to squelch the speaker when no audio is being output to the speaker. This squelch will remain open for two seconds after no audio is present. The DSP then mutes the speaker using U1-88.

Transmit Audio

Transmit audio is originated from the DSP in digital format. The DSP combines control tones, paging tones and voice audio to generate the transmit audio.

It is converted to analog by the D/A section of U15. Upon conversion to analog, the audio is passed through the line-out gain stage consisting of U11 and U10 for level adjustment. U10 also provides the proper line drive and line enable for the transmit audio.

The proper level audio is then routed to the line 1 transformer for output from the desk set. In addition to the transmit audio, data is combined with the transmit audio prior to line-out compensation at U11-3.

U10-1 is the line-driver enable for the transmit audio. This provides for a 560-ohm transmit output impedance.

Microphone Audio

The three sources for mic audio are the internal, handset, and audio accessory mic. The microcontroller controls which mic is used based on the source of the PTT. The selected mic audio is gated between the handset/internal and the audio accessory mic by U14 using the outputs of U5–C6. The selection of the handset and internal mic is controlled by U5–C5.

When U5-C5 is high, U25 will provide a high level of VMB or mic-bias voltage to the internal mic, thus, enabling the internal mic and disabling the handset mic. If U5–C5 is low, the internal mic will not have mic bias, but the handset mic will and, thus, the handset mic is selected.

The audio accessory port can be configured to provide a mic bias to the audio accessory. This is controlled by the microcontroller using U5–C7. Each mic audio is gain compensated by U22 so that the same level is presented to the mic gain-stage consisting U12 and U22.

The audio is then presented to the A/D section of U17 where it is converted to digital for use by the DSP. The DSP compresses the mic audio using U13 and, if tone control is in use, notches the mic audio prior to combining it with the transmit audio. This compressor can be disabled using the desk set diagnostics.

Guard Tone Detection

When configured for tone control operation, the IPE2500A must detect guard-tone from parallel units to restrict transmissions. This is done by first auto-leveling the transmit audio input from line 1 using U12.

The audio is then converted to digital using the A/D section of U16. The DSP this processes this audio to determine if guard tone is present.

DC Control Module (not compatible with MLS operation)

The reference designators listed in this section refer to the dc control schematics unless otherwise stated.

The dc control module provides a method of generating dc control currents on line 1 and detecting line voltages to restrict transmission during a parallel transmit. The microcontroller provides the dc control current information to the dc control module in a serial format to U505.

Using the resistor ladder consisting of LR1A–LR6B, this information is converted into a dc voltage. This dc voltage then provides a control reference, using U503 and Q507, to the comparator circuit consisting of U502 and U501.

U501 then causes Q500 and T500 to generate the necessary switch voltage to achieve the desired line current. This line current is then converted to a voltage reference using U502 and R532 that is fed back and compared again to the reference voltage provided by Q507.

The direction of the current, positive or negative, is controlled by U505-7. This signal causes either U510 or U511 to be switched on. If U510 is switched on, then U511 is switched off and the current is output on J13-8 and returned on J13-7.

If U511 is switched on then U510 is switched off and the current is output on J13-7 and returned on J13-8. Before any current can be output and returned, U505-7 must be high. This, in turn, provides a ground to Q512 and Q513 that allows U510 or U511 to be switched on.

Relay Control Module (not compatible with MLS operation)

The reference designators listed in this section refer to the relay control schematics unless otherwise stated.

The relay control module is used to provide closures out via relays and sense closures via closures to ground. The microcontroller provides closure-out information and reads closure-in information via serial data. Closure outputs are controlled by the data in U701. Closure senses inputs are read from U702.

To provide a closure on relay 1, the microcontroller asserts U701-15. This, in turn, drives the corresponding Q701 that provides the ground for the coil of K701. To provide a closure sense input on input 1, J701-5 must be grounded.

This, in turn, is latched into U702 by the microcontroller where the microcontroller takes the appropriate action.

Multi-Line Select Module

The reference designators listed in this section refer to the multi-line select schematics unless otherwise stated.

The transmit and receive audio paths to and from the desk set are routed to the NSL PCBA through P802. Control lines for 4 individual radio stations are brought into the desk set onto terminal strip J801. Each line is selected individually through K800–K803. The relays are driven from the microcontroller on the desk set via the SPI bus register/latch V801. The SPI bus interfaces on P800-8, 10, 11, 12, and 13.

Each channel has an adjustable line activity detector that is also interfaced to the desk set microcontroller via the SPI bus at V809.

Receive audio balance for all four lines is adjusted with pot 1 to pot 4 and the resultant audio is switched to either selected (select) or background (unselect) status through audio gates V804 and V805. The unselect and select audio is mixed and sent to the desk set PCBA through driver V808 and T806.

Reset Circuit

Both the DSP and the microcontroller use the EPROM, U2. When coming out of reset, the DSP must boot its software from the EPROM. In doing so, it asserts U1-21, BMS, low, causing the microcontroller to remain reset.

After the DSP has completed loading its software from the EPROM, it no longer requires access to the EPROM. The DSP then disasserts BMS, allowing the microcontroller to come out of reset. The microcontroller then executes its software from the EPROM.

General Description

GAI-Tronics' CARD Suite Programming Software, part number XAC1000A, is needed to program some of the functions and parameter settings of the dispatch equipment. It allows entry of operational programming data into your personal computer for transfer to the equipment. The programmed data can be retrieved, edited, archived, and printed in hard copy for record keeping.

Connection

The GAI-Tronics equipment must be connected to your personal computer with the programming cable, part number XAC0004A, before the programming software can be used. To make this connection, attach the cable to the COM1 or COM2 connector on the computer. Connect the other end to the programming jack on the GAI-Tronics equipment.

Installation

The minimum system requirement necessary to support the CARD Suite Software Application is Windows 95 or newer. However, CARD Suite is not compatible with Windows NT.

The CARD Suite Programming Application components are contained on CD-ROM. Please exit all other programs that are running until the installation is complete.

Place the CD in the PC's CD-ROM drive. If the "auto-run" feature on your CD-ROM drive is enabled, the CARD Suite menu screen should appear within a few seconds. If for any reason the installation does not start up automatically, it can be run from the Start menu.
Select the START button and then select **Run** from the Start menu. At the prompt, type ***x*:\Setup.exe** where ***x*** represents the drive letter that is associated with your CD-ROM drive. A CARD Suite icon should appear on the desktop display after successful installation.

Reading the Unit

1. After opening the program, select the appropriate product icon, click on **File** in the toolbar and select **New Archive** to begin creating an archive.

2. Enter an archive description (name) and customer/site (name), select the method of creating the archive (default values or reading a connected unit), and click **Ok** button to create the archive.

3. View the **Help** file for programming guidance.

CARD Suite Programming

To program a unit that has no saved archive, follow the steps for Reading the Unit on the previous page. To open an existing archive for editing, first click on the appropriate product icon, then double click on the archive you wish to edit from the list of saved archives. This will open the archive for that particular unit.

After all changes are made, you must save and close the archive prior to programming the unit with changes by clicking the OK button at the bottom of the screen.

After saving and closing the archive you can program the unit by selecting the archive from the list of saved archives, then selecting Program Unit under the Tools dropdown.

Editing Screen

The status bar on the bottom of the window gives instructions on setting the desired parameter. Editing some parameters depends on the state of another parameter, such as in the Programmable Buttons screen. After changing a parameter, appropriate changes are automatically made to any other parameter on the screen that depend on it.

Troubleshooting the IPE2500A Desk Set

The following is a list of potential problems you may encounter and possible solutions.

Problem	Possible Solution
The unit has no LED or LCD display	Ensure that the unit is receiving dc power.
	Check for a blown fuse.
The keyboard does not respond.	Ensure that the PTT or monitor input on the audio accessory port is not activated.
	Ensure that the polarity of the PTT and Monitor outputs of the accessory match the CARD Suite programmed polarity for the audio accessory port.
There is continuous noise in the receive audio.	If the receive audio is derived from a detector or discriminator, continuous noise is heard unless the receiving unit has an internal squelch circuit.
No, low, or distorted transmit audio.	Ensure that the microphone sensitivity is properly adjusted for the microphone in use.
	Ensure that the line output level is properly adjusted.
	Ensure that the microphone compressor is enabled.
	Ensure that the radio/adapter is properly adjusted for the audio being transmitted.
The desk set will not cause the transmitter to key.	Ensure that the proper guard tone and function tones/dc-current parameters have been programmed with the CARD Suite software.
	Ensure that the line out level is properly adjusted.
	Ensure that the remote adapter is configured and connected to the radio properly.
	Ensure that there is a valid circuit line from the desk set to the remote adapter, meeting specified line-loss criteria.
	Ensure that the private circuit is balanced by making sure neither side of the telephone line is grounded.
RX Audio is low or distorted.	Ensure that the audio level is properly adjusted for the particular speaker.
	Ensure that the line-input sensitivity is properly adjusted.
	Ensure that the audio receive compressor is enabled.
	Ensure that the remote adapter is wired correctly, including the RX audio pair. Audio quality is limited by the quality of the private radio circuit or leased lines between the radio equipment and the desk set. In some cases, equalization of the lines or line conditioning may be required to ensure a reasonably flat audio response on the line.

Problem	Possible Solution
No or low transmit audio	Ensure that the leased line being used does not have excessive line losses.
LOTL never/always on.	Ensure that the DCLOTL threshold has been properly set using the internal diagnostics.
No line current	Ensure that the dc module can output current by using the internal diagnostic.
	Ensure that the line between the desk set and dc adapter has dc continuity
Not able to change the selected frequency.	If direct DTMF is enabled, ensure that the SELECT button is first pressed to enter the frequency selection mode.
	If direct DTMF is enabled and this is an IPE2500A-MLS, frequency selection is not possible except through the use of programmable buttons.

Fuse Replacement

⚠ **CAUTION** ⚠

For continued safe operation, replace fuses with the same type.

- **Fuses F1 and F2 are Bussmann C515S 1.25A SB 2AG.**
- **Fuse F401 is Bussmann GMA 1A 5X20MM.**

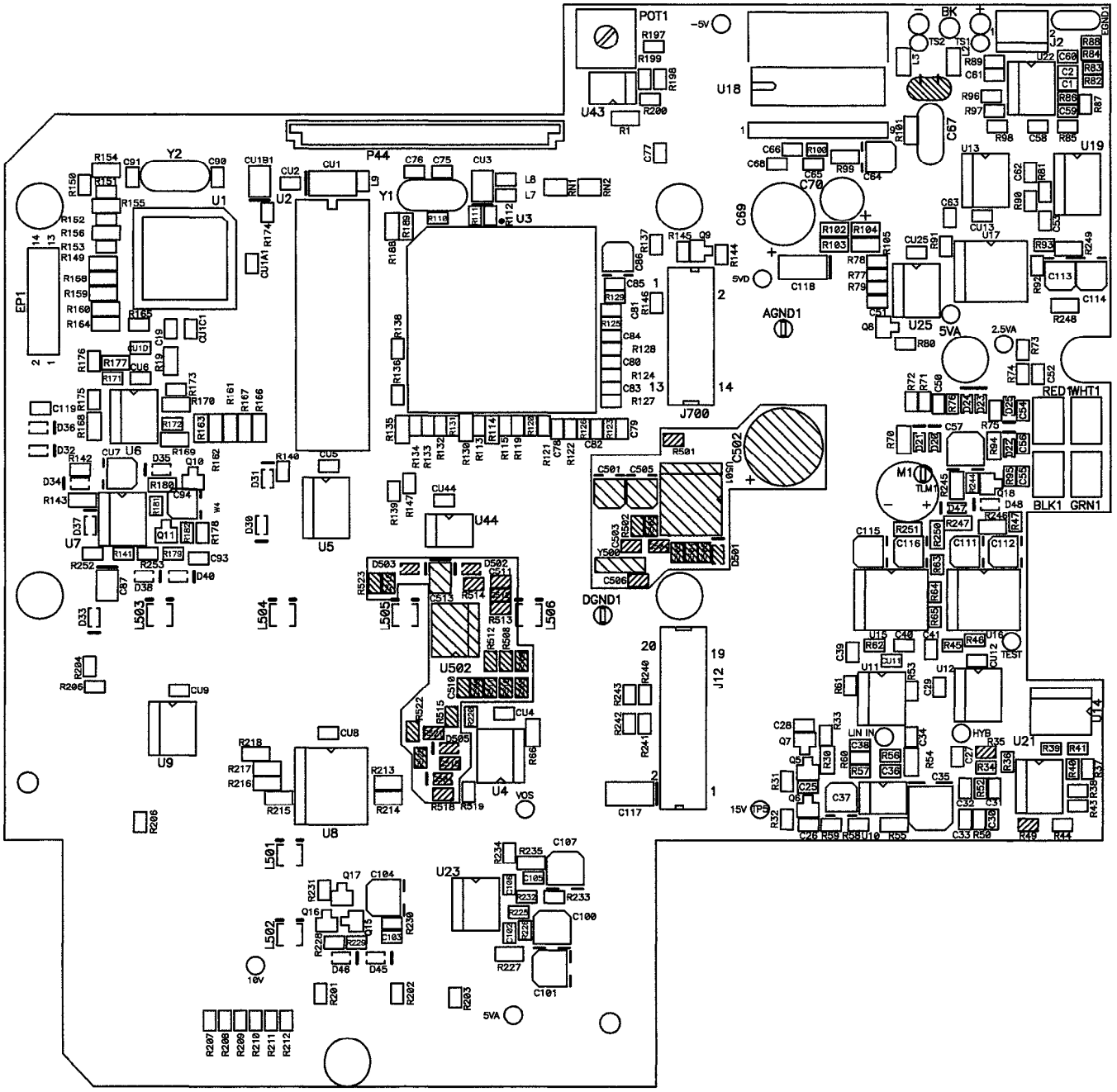
POT1
-5V
BK
J2
EGND1
U18
U43
P44
Y2
Y1
U1
U2
U3
U19
U13
U17
U25
5VA
2.5VA
AGND1
J700
C502
M1
TLM1
RED1
WHT1
BLK1
GRN1
EP1
U6
U7
U5
U44
U502
DGND1
J12
U9
U8
U4
U21
U14
LIN IN
HYB
TEST
VOS
15V
TP5
U23
10V
5VA

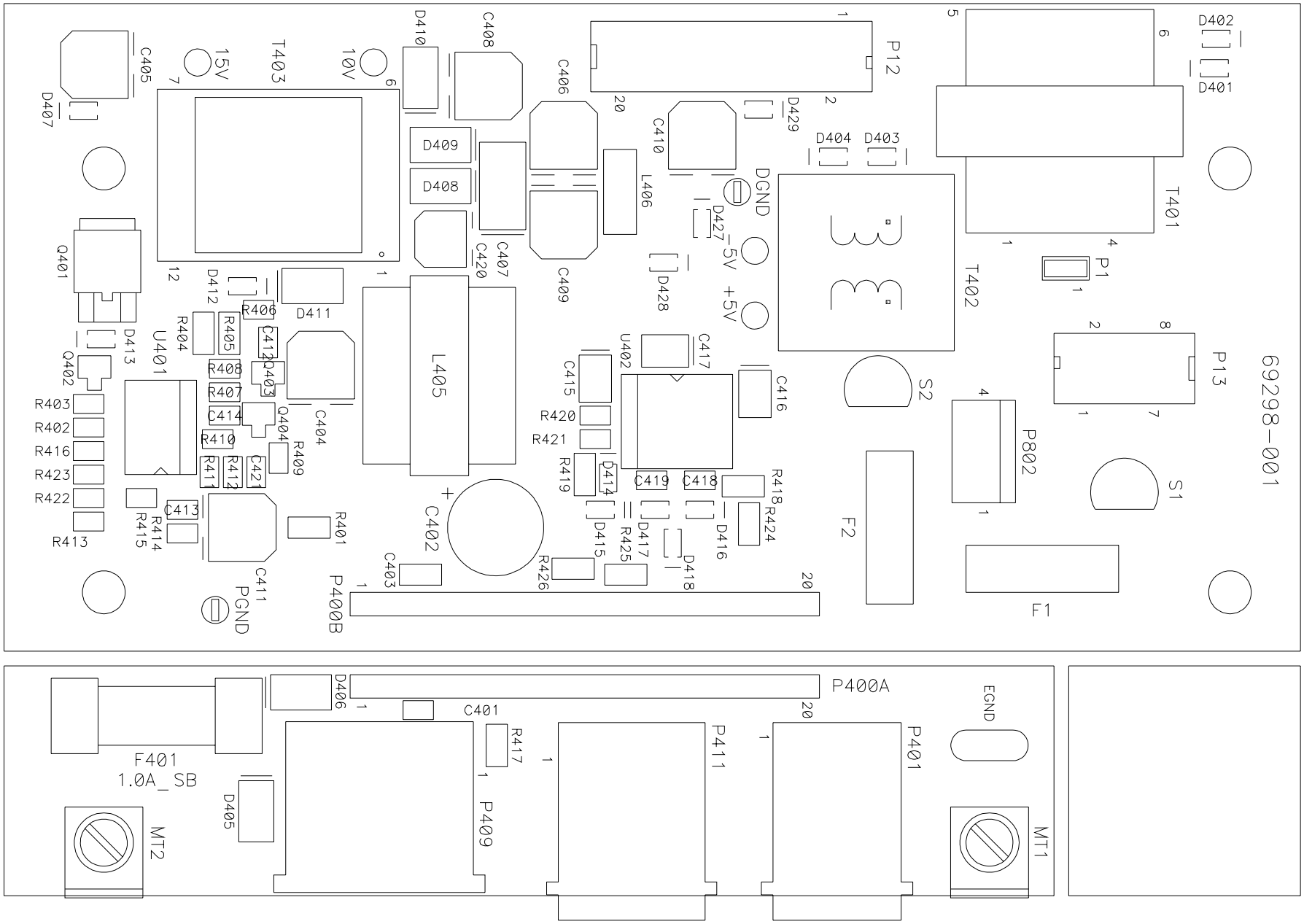
69298-001
P12
P13
P1
P802
P400B
P400A
P401
P411
P409
T401
T402
T403
S1
S2
F1
F2
F401
1.0A_SB
MT1
MT2
EGND
PGND
DGND
+5V
-5V
3.3V
15V
10V
U401
U402
L405
L406
C402
Q401
Q402
D401
D402
D403
D404
D405
D406
D407
D408
D409
D410
D411
D412
D413
D414
D415
D416
D417
D418
D427
D428
D429
R401
R402
R403
R404
R405
R406
R407
R408
R409
R410
R411
R412
R413
R414
R415
R416
R417
R418
R419
R420
R421
R422
R423
R424
R425
R426
C401
C403
C404
C405
C406
C407
C408
C409
C410
C411
C412
C413
C414
C415
C416
C417
C418
C419
C420
C421
Q403
Q404

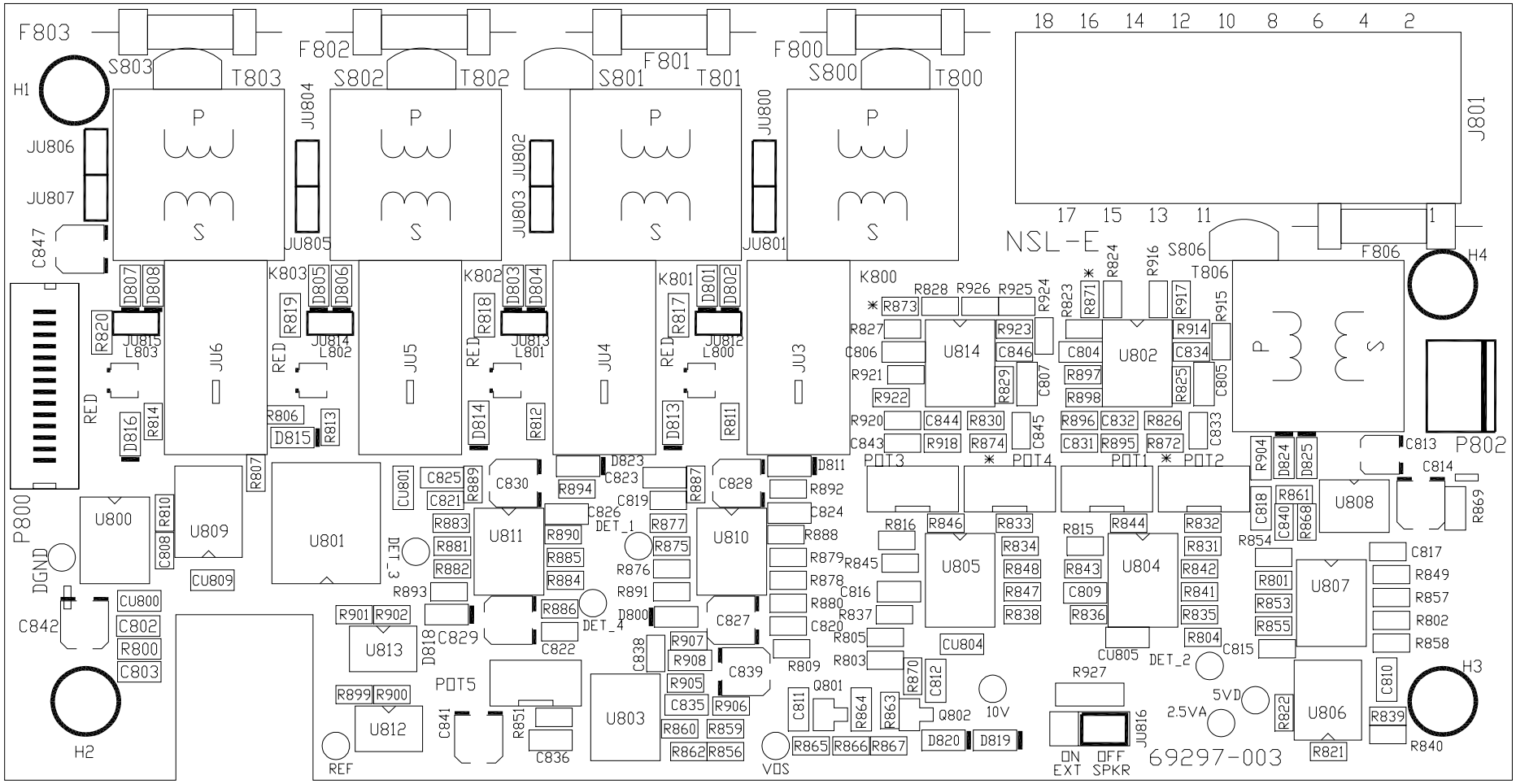

Multi-Line Select Board
(IPE2500A-MLS)



Tone RC Desk Set - Line Interface - Sheet 1

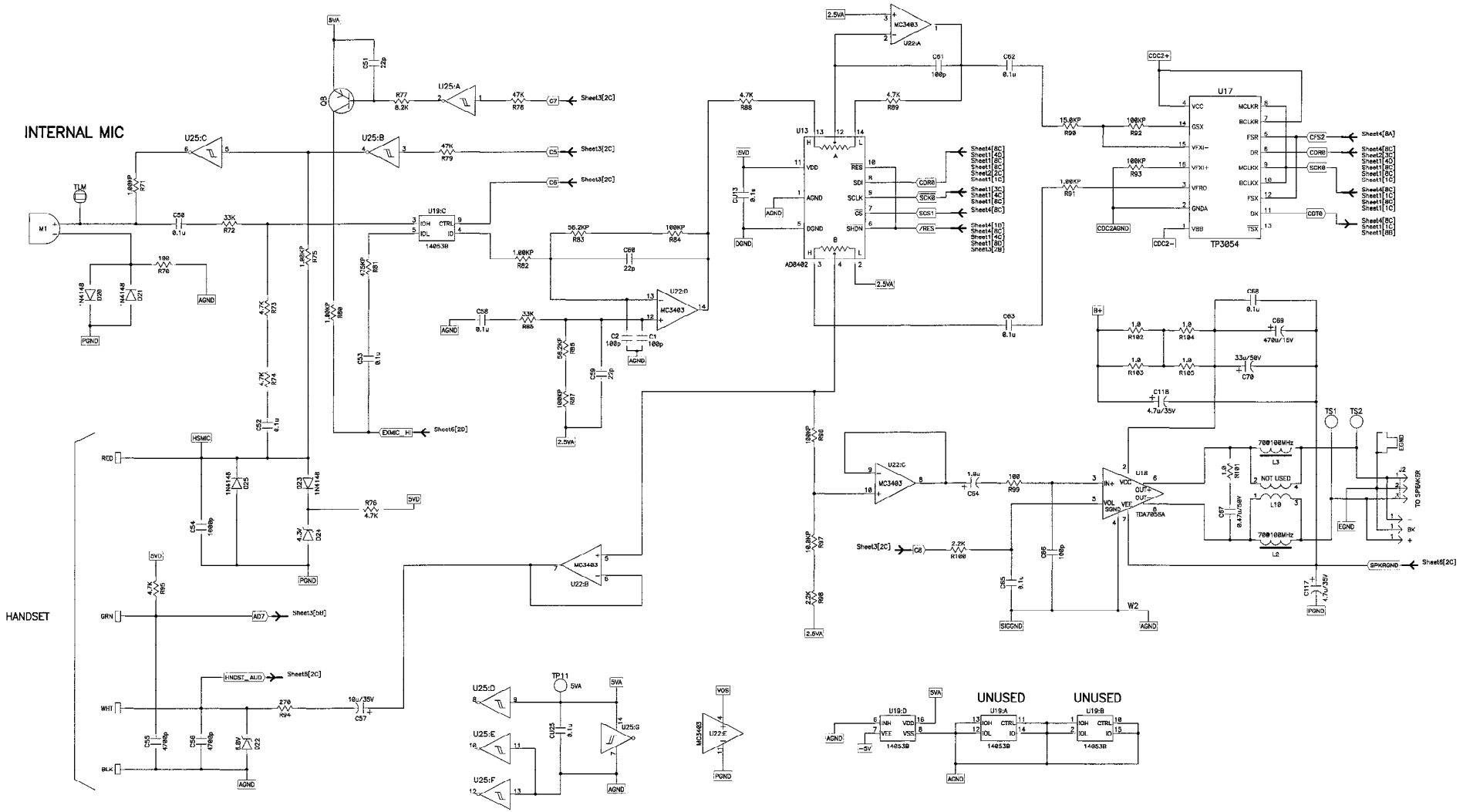

Tone RC Desk Set - User Audio I/O - Sheet 2

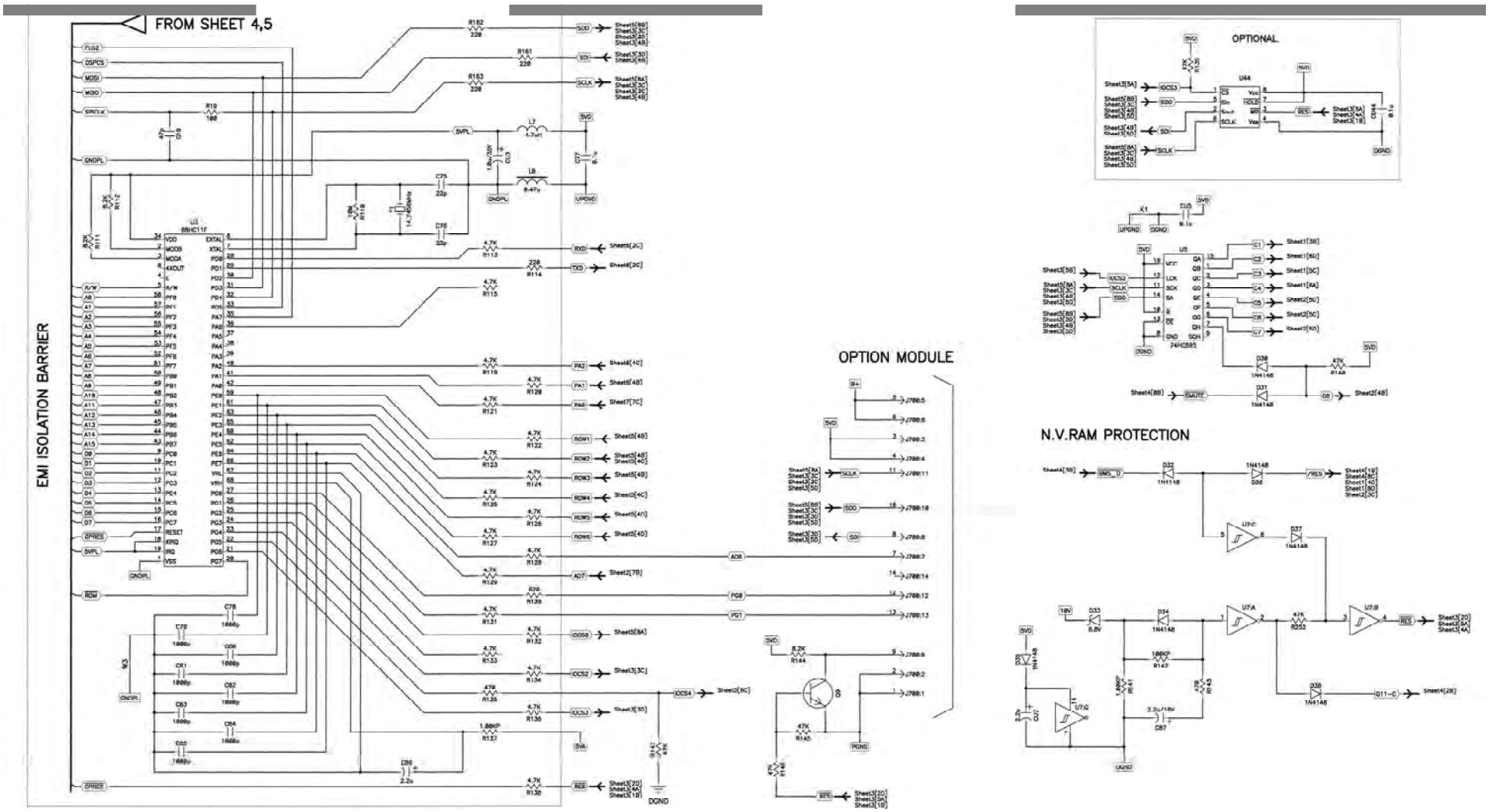

Tone RC Desk Set - Control Microprocessor I/O - Sheet 3

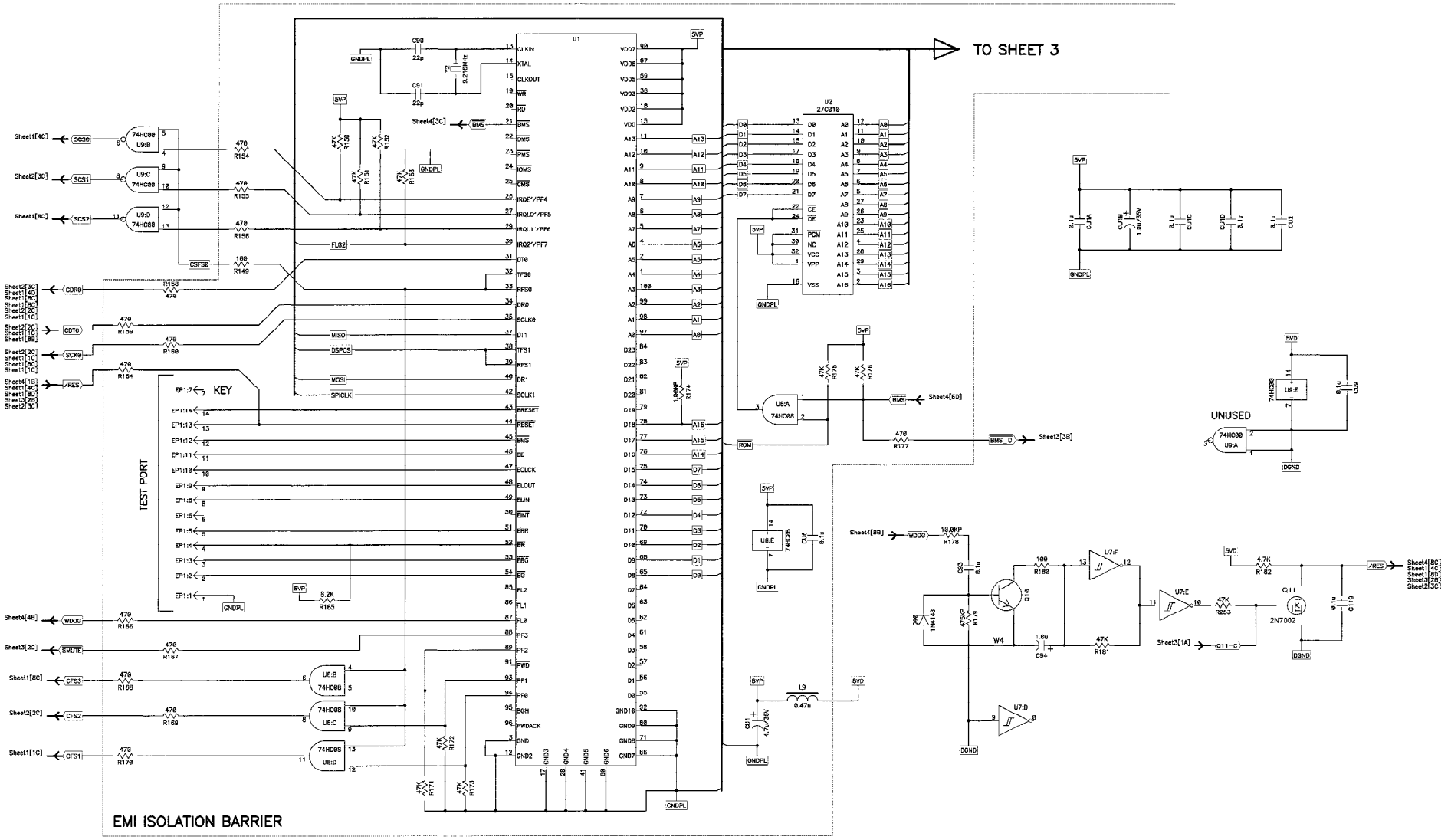

Tone RC Desk Set - DSP Block - Sheet 4

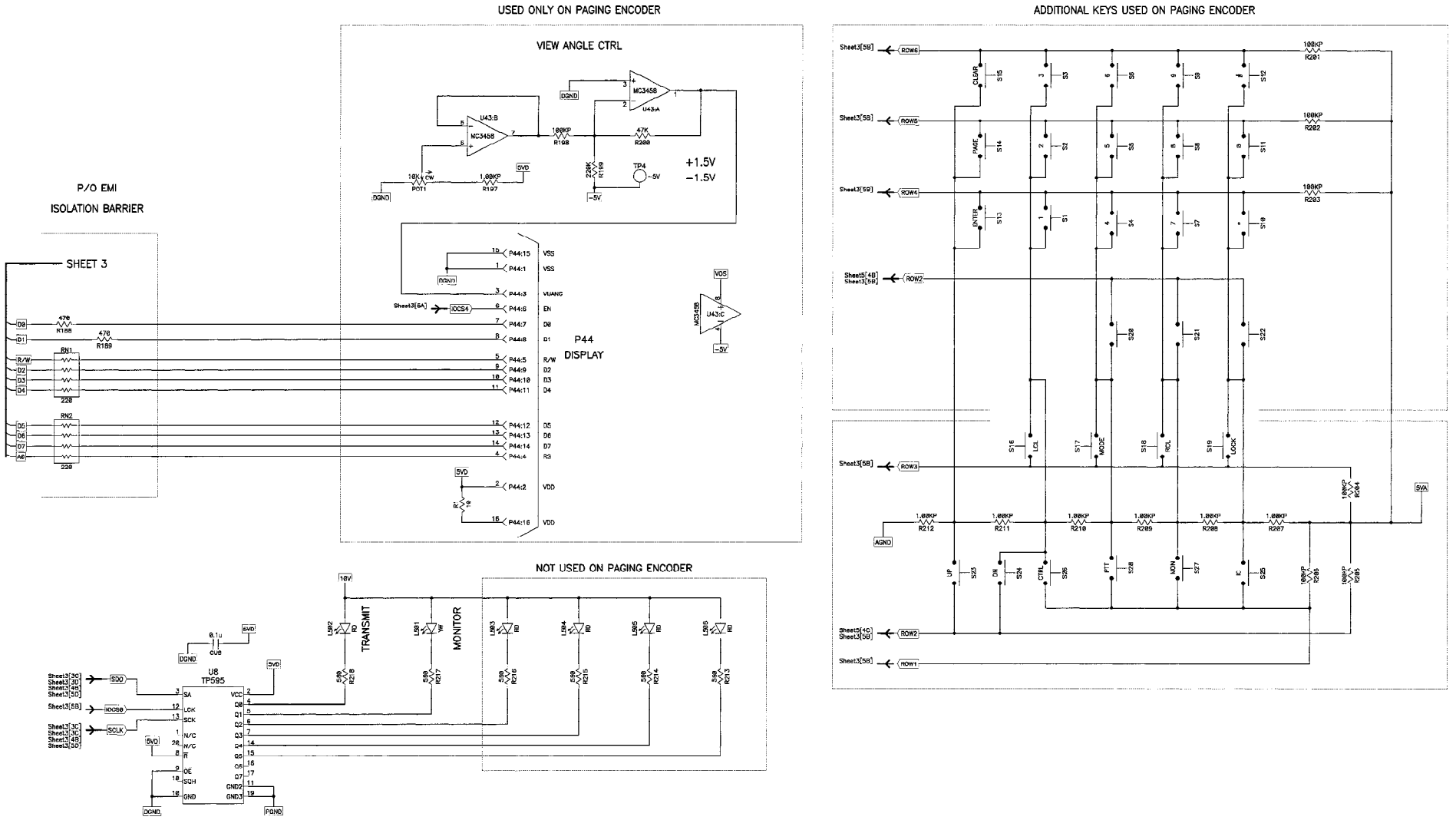

Tone RC Desk Set - Tone Key Panel - Sheet 5

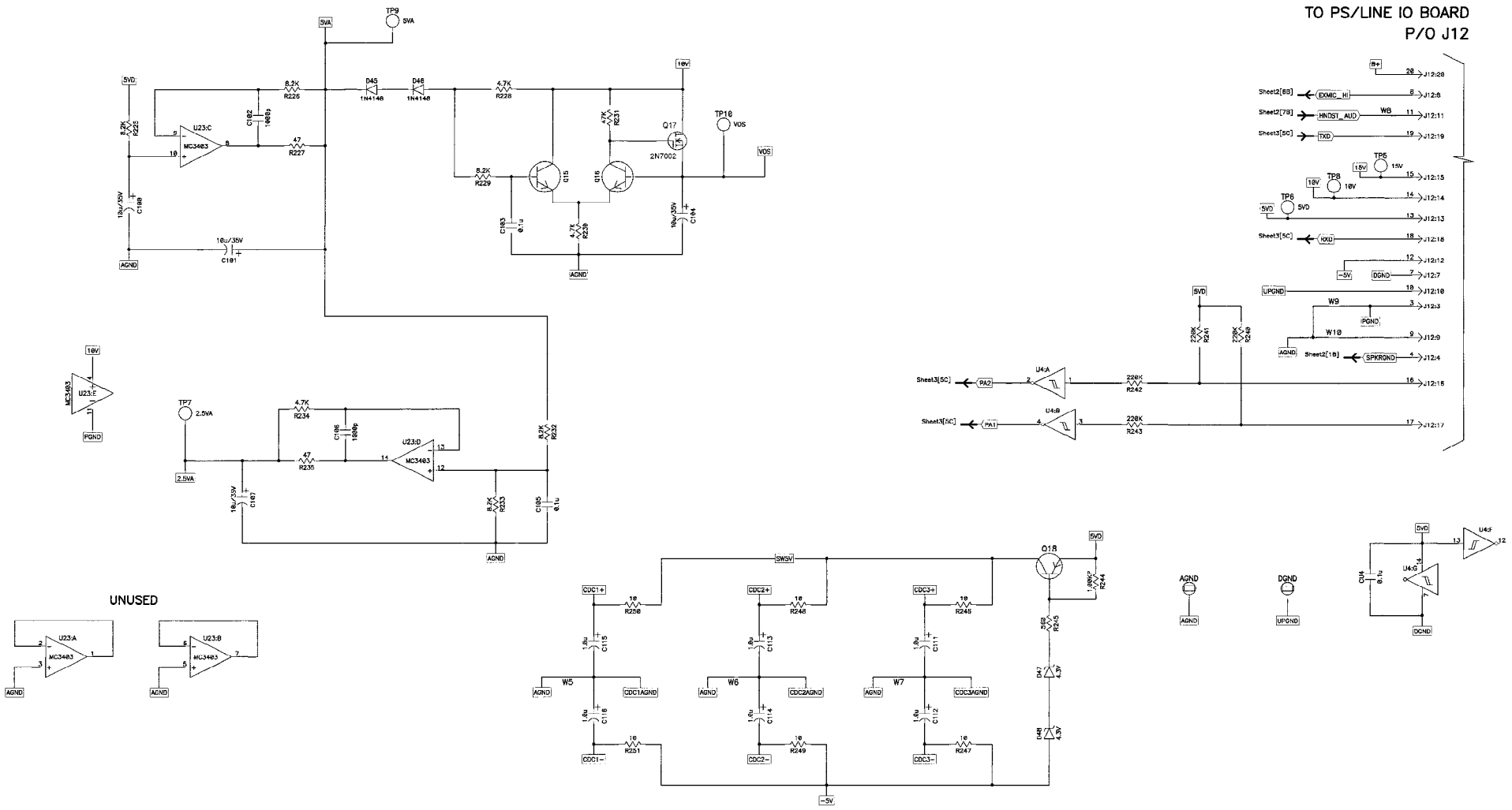

Tone RC Desk Set Power Supply - Sheet 6



Schematic - Sheet 7

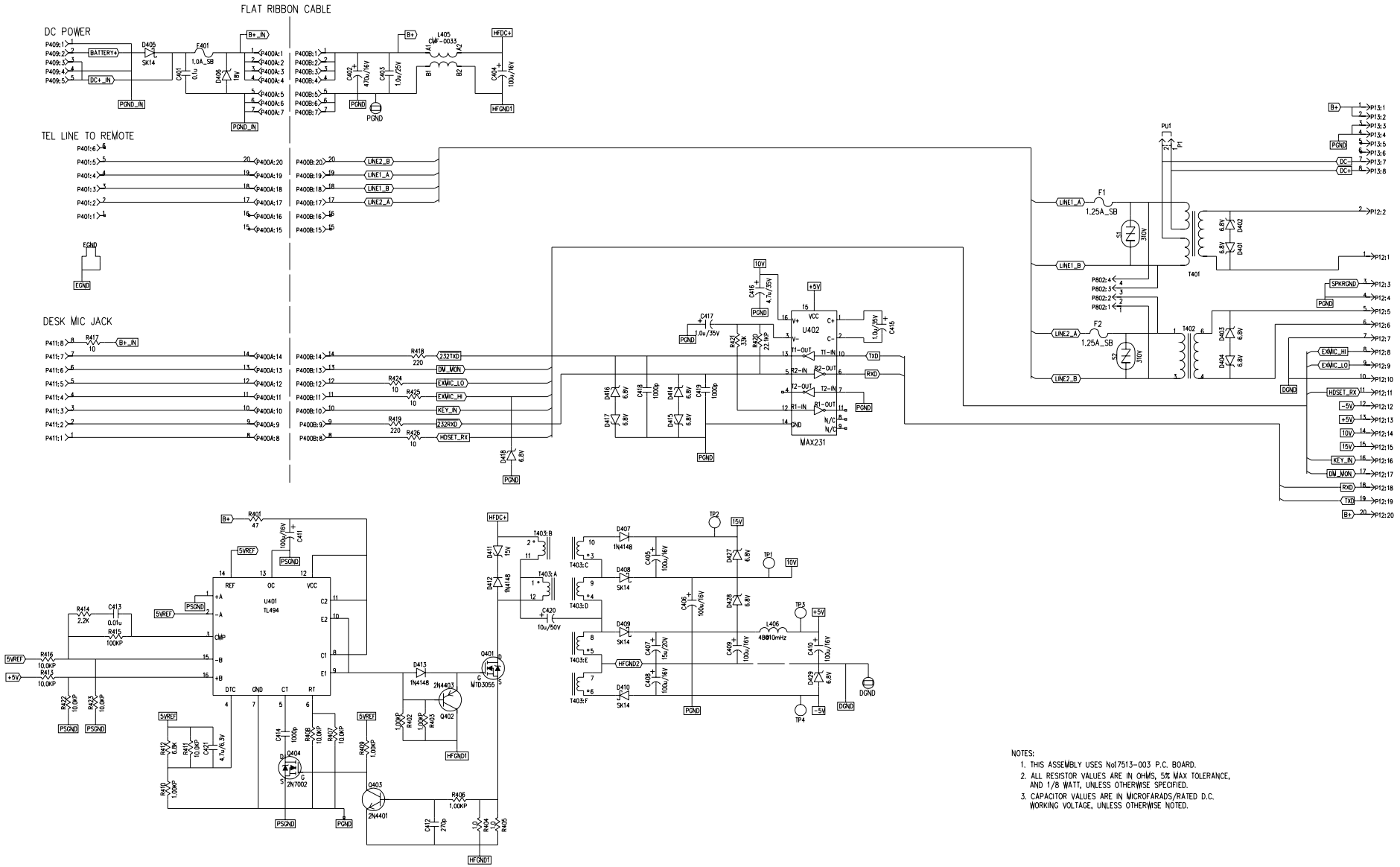

Schematic – Sheet 8 DPS PCBA

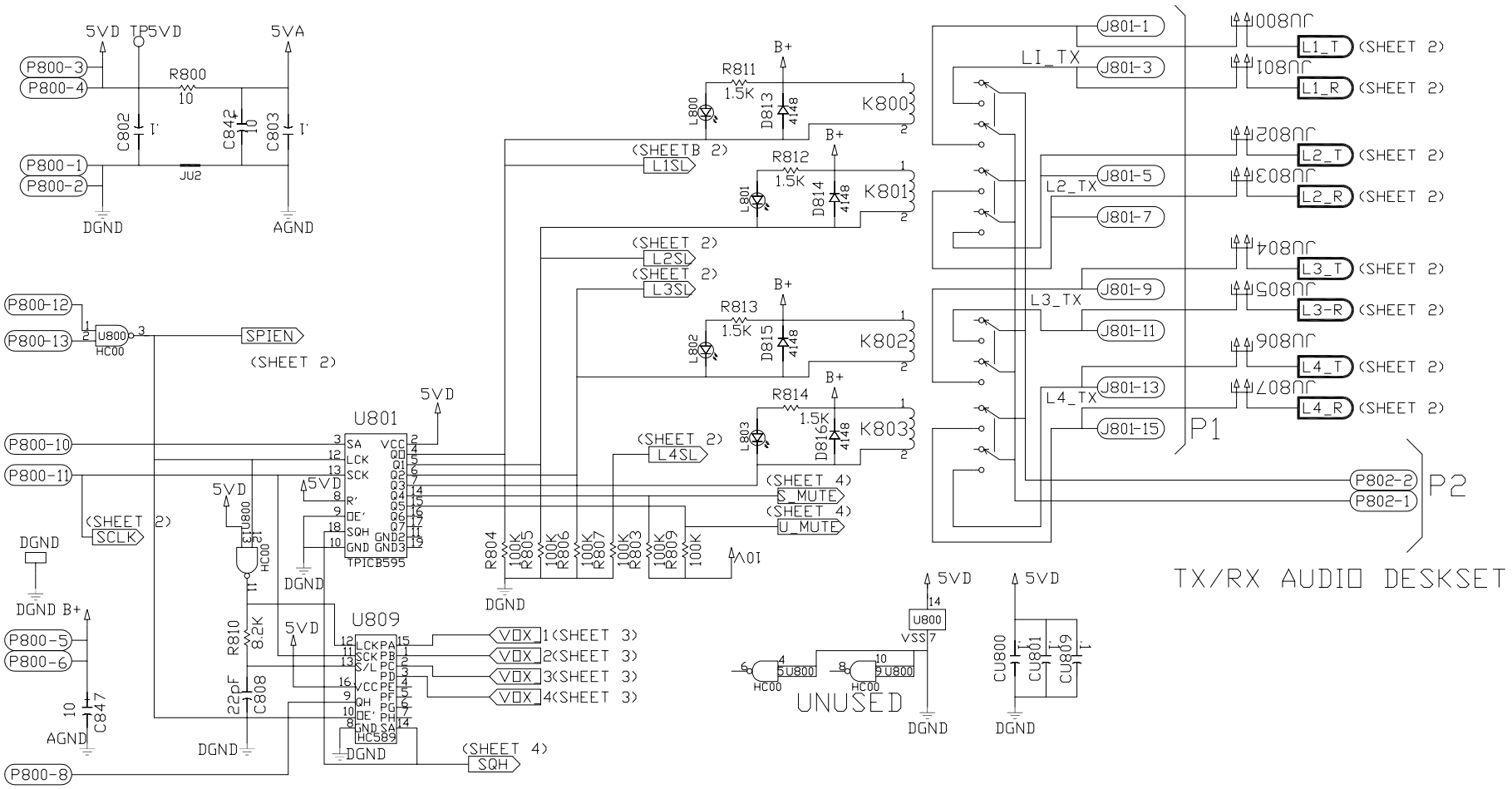

Multi-Line Select Sheet 1 of 4 (5/02)

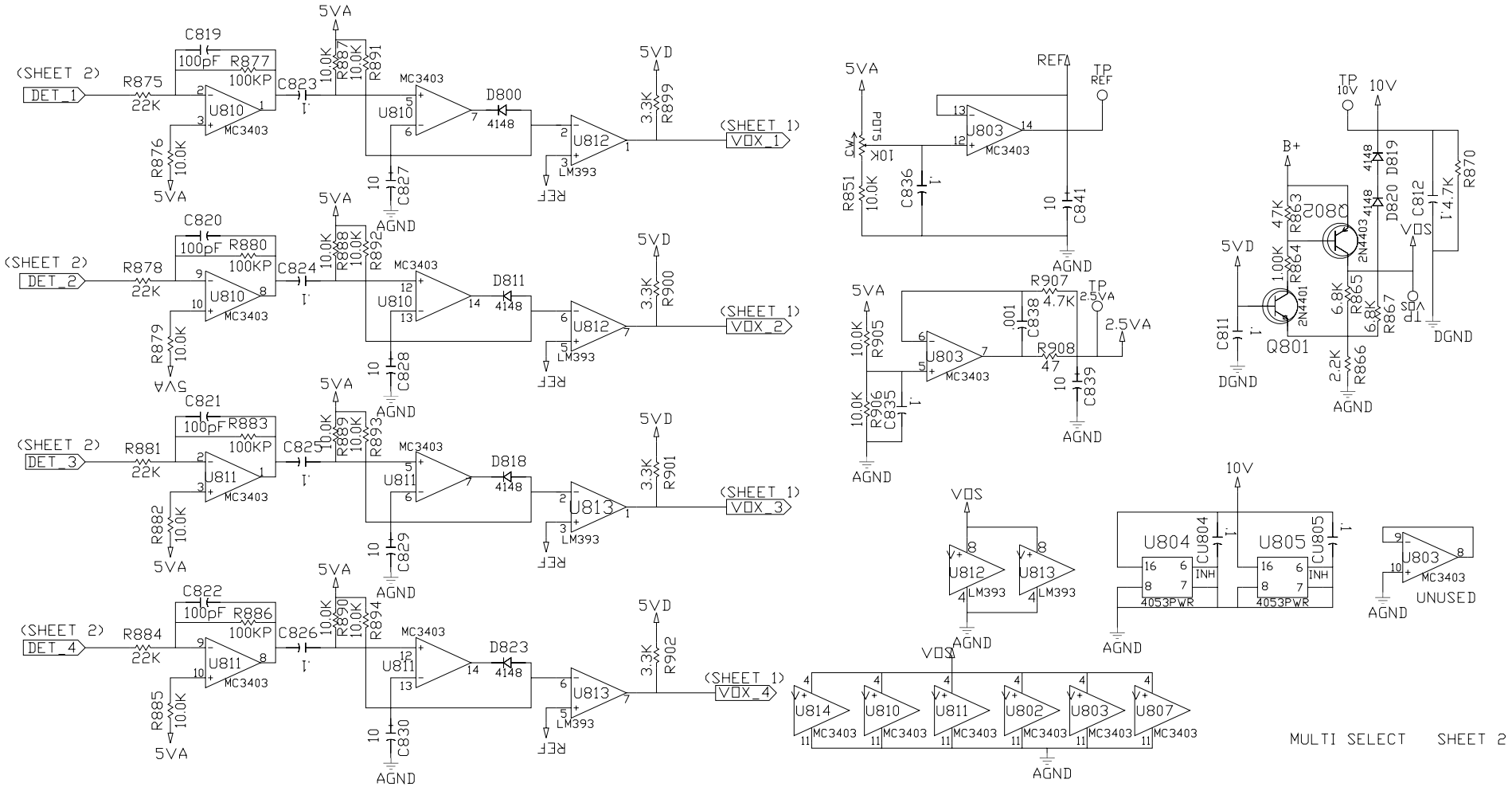

Multi-Line Select Sheet 2 of 4

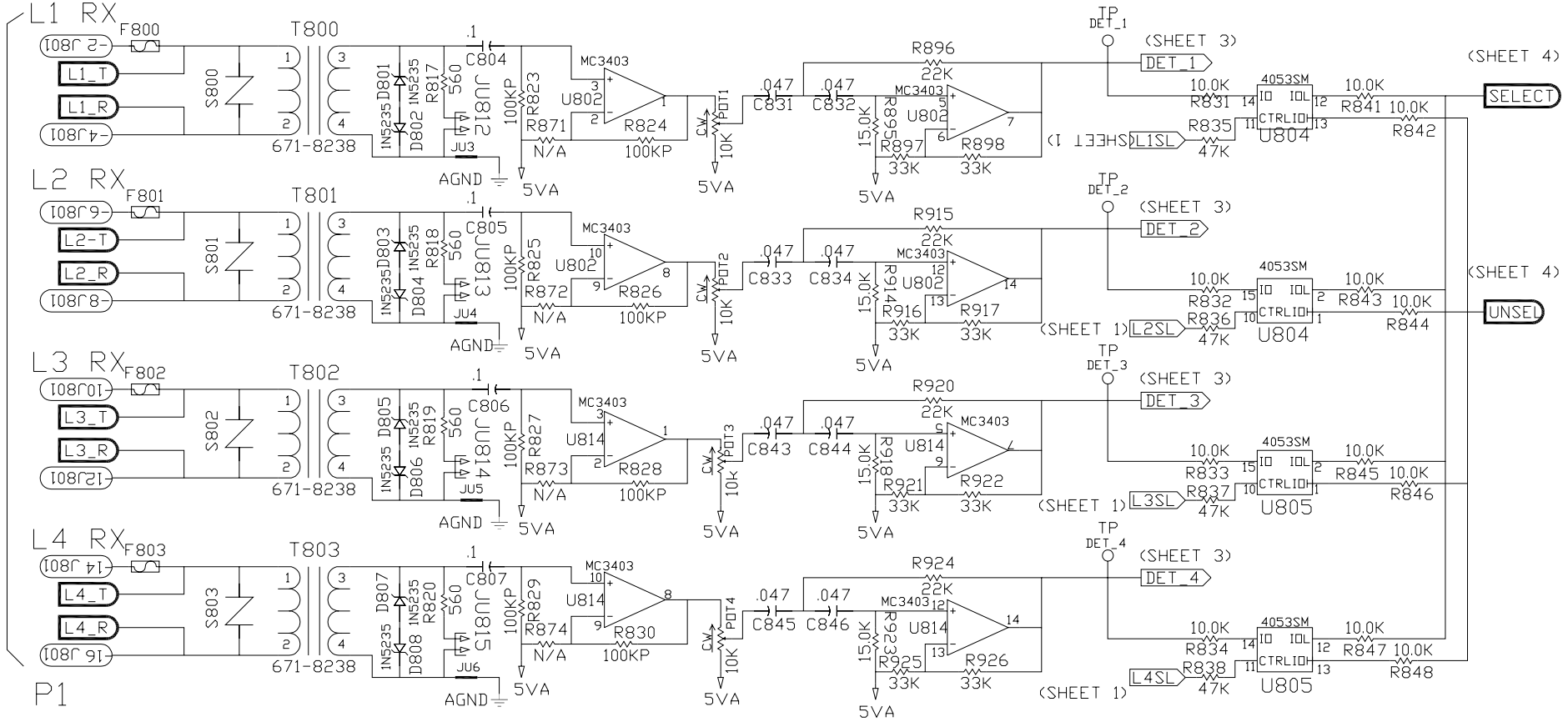

Multi-Line Select - Sheet 3 of 4

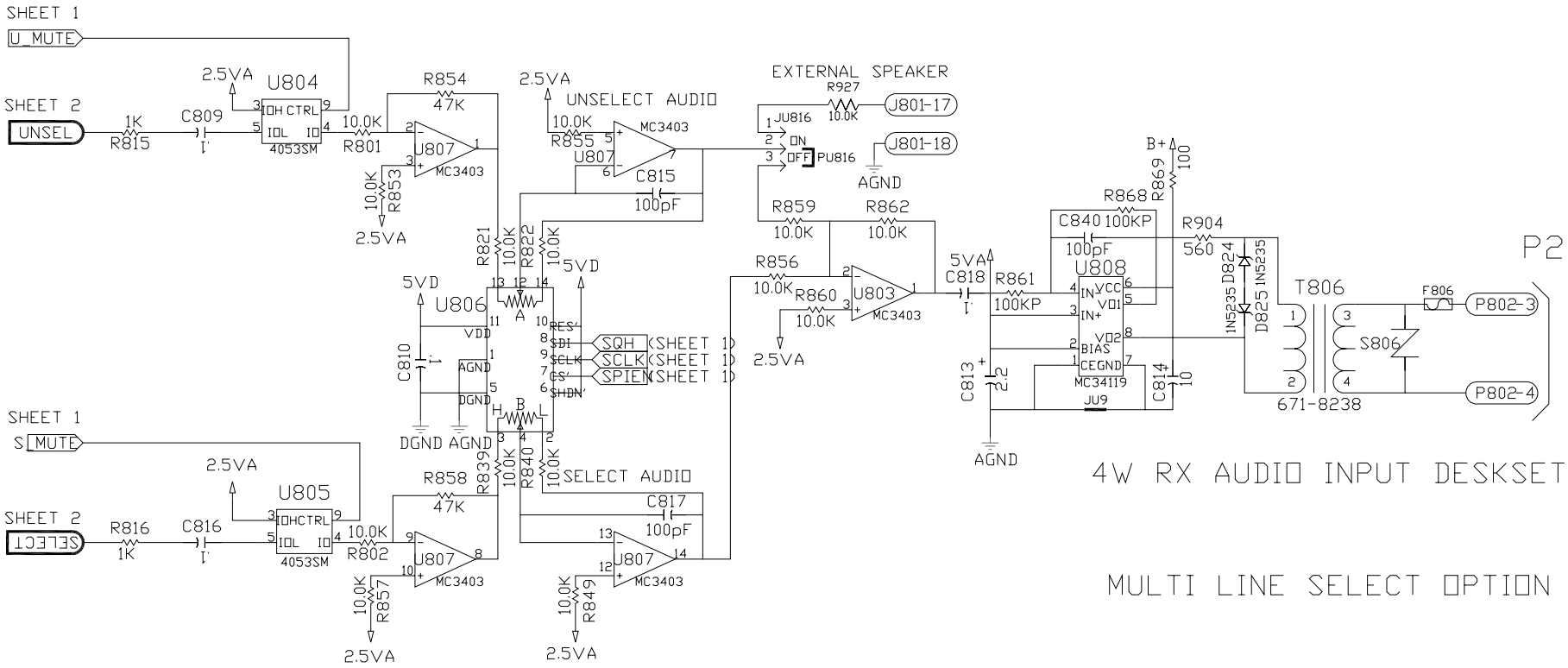

Multi-Line Select Sheet 4 of 4

Term	Definition
CSQ	Carrier squelch
CTCSS	A means of grouping users of a common radio channel. Subaudible tones are transmitted with audio; a particular radio's speaker (or the speakers of a group of radios) will unmute to broadcast a transmission only if the associated subaudible tone identifies it as belonging to the radio's user group.
CDCSS	A system analogous to CTCSS but using low speed digital signaling instead of subaudible tones.
HLGT	High level guard tone
LLGT	Low level guard tone
PTT	Push-to-talk

NOTES: